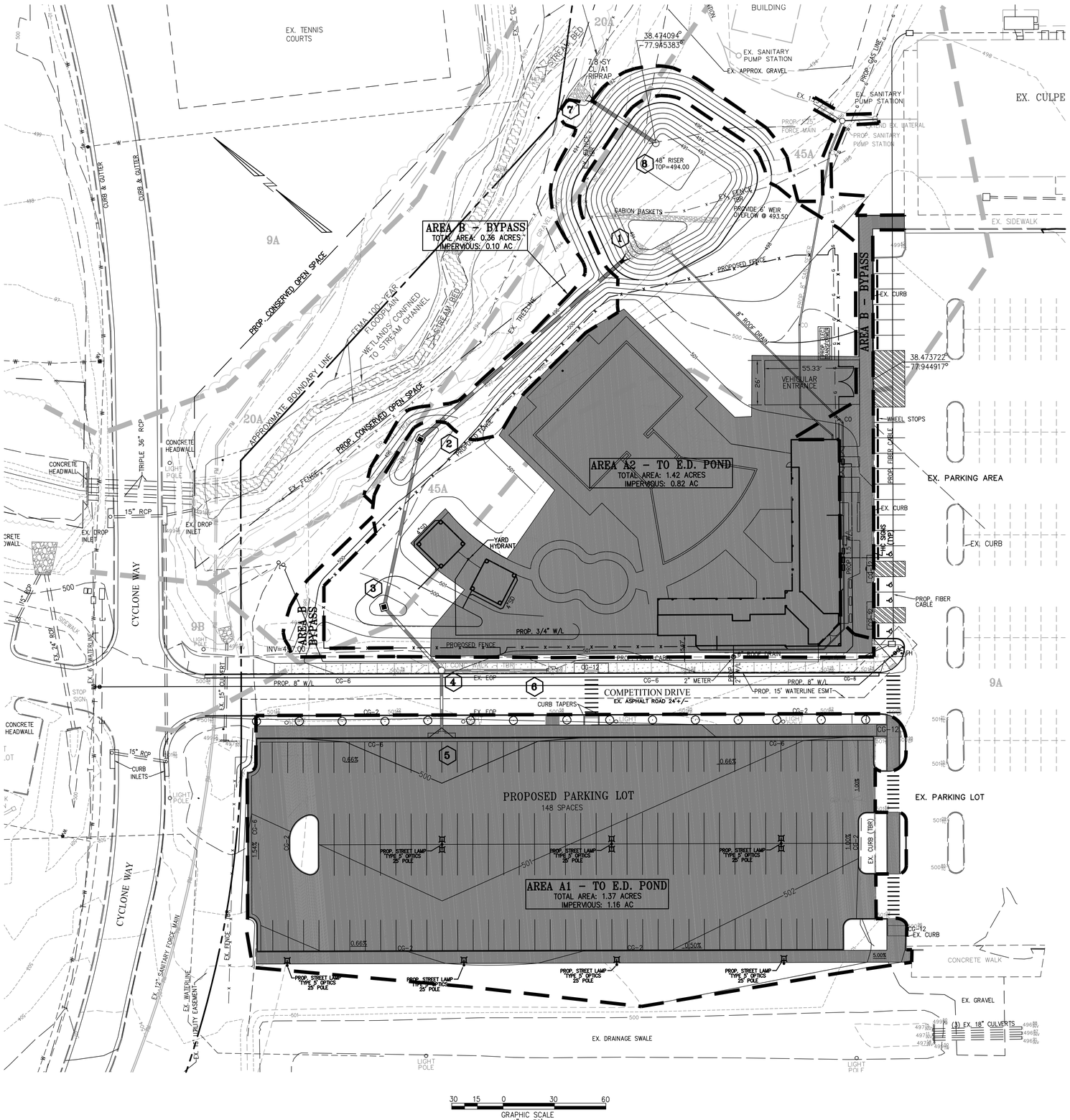

LEGEND

- DRAINAGE DIVIDE/"SITE" LIMITS
- IMPERVIOUS AREA
- SOILS TYPE DIVIDES

COMMONWEALTH OF VIRGINIA
MARVIN T. HINCHEY
LIC. NO. 017596
01-03-2024
PROFESSIONAL ENGINEER

DRAINAGE AREA TABULATION

AREA A – TO E.D. POND
IMPERVIOUS: 1.98 ACRES
TURF: 0.81 ACRES
TOTAL 2.79 ACRES

AREA B – BYPASS
\F;IMPERVIOUS: 0.10 ACRES
TURF: 0.26 ACRES
OPEN SPACE: 10.20 ACRES (SEE SHEET 3)
TOTAL 10.56 ACRES

TOTAL SITE
IMPERVIOUS: 2.08 ACRES
TURF: 1.07 ACRES
OPEN SPACE: 10.20 ACRES (SEE SHEET 3)
TOTAL 13.35 ACRES

SOIL DATA

MAP SYMBOL	HYDRIC (*)	K FACTOR WHOLE SOIL	K FACTOR ROCK FREE	HYDRO-LOGIC	DEPTH FT.	DEPTH TO WATER FT.	SAT HYDRO. COND.	SOIL NAME	AVAILABLE WATER CAPACITY (SHRINK/SWELL)	FLOODS
9A	5%	0.43	0.43	C	2.3	6+	MOD HI	CLOVER-PENN COMPLEX 0-2% SLOPES	0.13	N
20A	95%	0.37	0.37	C	2.3	6+	MOD HI	ELBERT SILT LOAM 0-2% , OCC. PONDED	0.11	FREQUENT
45A	5%	0.43	0.43	C	2.5	6+	MOD HI	PENN-NESTORIA COMPLEX 0-2% SLOPES	0.13	N

AS LISTED BY THE USDA, SOIL CONSERVATION SERVICE

No.	Date	Issue Notes
3	1/3/2024	SDI comments
2	1/12/2024	Release for Bid
1	12/22/2023	Permit Review

No.	Date	Revision Notes	Zone	Appr

Project No. 23703-culpeper
Drawn by
Checked by
Drawn by
Checked by
Project Manager
Project Date
Scale
Sheet No. C13 of 22

Project Title
NORMAN SMITH ARCHITECTURE
1341 H Street, Washington, DC 20002-4906
3637 Slate Mills Road, Spenryville, VA 22740
T 202.462.5888 www.normansmitharchitecture.com

Consultant
HINCHEY & BAINES, PLC
ENGINEERING AND LAND PLANNING
125 East Davis Street
Culpeper, Virginia 22701
Phone (540) 825-2220
FAX (540) 829-2239

Culpeper County
Community Pool Project
16388 Competition Drive
Culpeper, VA

POST-DEVELOPMENT
DRAINAGE MAP - QUALITY

DEQ Virginia Runoff Reduction Method New Development Compliance Spreadsheet - **Version 3.0**

○ 2011 BMP Standards and Specifications | ◉ 2013 Draft BMP Standards and Specifications

Project Name: CULPEPER SPORTS COMPLEX
Date: 11/13/2023
BMP Design Specifications List: 2013 Draft Stds & Specs

CLEAR ALL

data input cells | constant values | calculation cells | final results

Site Information

Post-Development Project (Treatment Volume and Loads)

Land Cover (acres)

	A Soils	B Soils	C Soils	D Soils	Totals
Forest/Open Space (acres) – undisturbed, protected forest/open space or reforested land			10.20		10.20 *
Managed Turf (acres) – disturbed, graded for yards or other turf to be mowed/managed			1.07		1.07
Impervious Cover (acres)			2.08		2.08
					13.35

** Forest/Open Space areas must be protected in accordance with the Virginia Runoff Reduction Method*

Constants

Annual Rainfall (inches)	43
Target Rainfall Event (inches)	1.00
Total Phosphorus (TP) EMC (mg/L)	0.26
Total Nitrogen (TN) EMC (mg/L)	1.86
Target TP Load (lb/acre/yr)	0.41
Pj (unitless correction factor)	0.90

Runoff Coefficients (Rv)

	A Soils	B Soils	C Soils	D Soils
Forest/Open Space	0.02	0.03	0.04	0.05
Managed Turf	0.15	0.20	0.22	0.25
Impervious Cover	0.95	0.95	0.95	0.95

Post-Development Requirement for Site Area

TP Load Reduction Required (lb/yr)	0.50

LAND COVER SUMMARY – POST DEVELOPMENT

Land Cover Summary

Forest/Open Space Cover (acres)	10.20
Weighted Rv (forest)	0.04
% Forest	76%
Managed Turf Cover (acres)	1.07
Weighted Rv (turf)	0.22
% Managed Turf	8%
Impervious Cover (acres)	2.08
Rv (impervious)	0.95
% Impervious	16%
Site Area (acres)	**13.35**
Site Rv	**0.20**

Treatment Volume and Nutrient Loads

Treatment Volume (acre-ft)	0.2183
Treatment Volume (cubic feet)	9,508
TP Load (lb/yr)	5.97
TN Load (lb/yr) (Informational Purposes Only)	42.74

Runoff Volume and Curve Number Calculations

Enter design storm rainfall depths (in):

1-year storm	2-year storm	10-year storm
2.70	3.30	5.00

Use NOAA Atlas 14 (http://hdsc.nws.noaa.gov/hdsc/pfds/)

***Notes (see below):**

[1] The curve numbers and runoff volumes computed in this spreadsheet for each drainage area are limited in their applicability for determining and demonstrating compliance with water quantity requirements. See VRRM User's Guide and Documentation for additional information.

[2] Runoff Volume (RV) for pre- and post-development drainage areas must be in volumetric units (e.g., acre-feet or cubic feet) when using the Energy Balance Equation. Runoff measured in watershed-inches and shown in the spreadsheet as RV(watershed-inch) can only be used in the Energy Balance Equation when the pre- and post-development drainage areas are equal. Otherwise RV(watershed-inch) must be multiplied by the drainage area.

[3] Adjusted CNs are based on runoff reduction volumes as calculated in D.A. tabs. An alternative CN adjustment calculation for Vegetated Roofs is included in BMP specification No. 5.

Drainage Area Curve Numbers and Runoff Depths*

Curve numbers (CN, CNadj) and runoff depths (RV $_{Developed}$) are computed with and without reduction practices.

Drainage Area A		A Soils	B Soils	C Soils	D Soils
Forest/Open Space -- undisturbed, protected forest/open space or reforested land	Area (acres)	0.00	0.00	0.00	0.00
	CN	30	55	70	77
Managed Turf -- disturbed, graded for yards or other turf to be mowed/managed	Area (acres)	0.00	0.00	0.81	0.00
	CN	39	61	74	80
Impervious Cover	Area (acres)	0.00	0.00	1.98	0.00
	CN	98	98	98	98

Total Area (acres):	2.79
Runoff Reduction Volume (ft^3):	0

$CN_{(D.A. A)}$ = **91**

	1-year storm	2-year storm	10-year storm
$RV_{Developed}$ *(watershed-inch)* with no Runoff Reduction*	1.79	2.35	3.98
$RV_{Developed}$ *(watershed-inch)* with Runoff Reduction*	1.79	2.35	3.98
Adjusted CN*	**91**	**91**	**91**

**See Notes above*

Drainage Area A

Drainage Area A Land Cover (acres)

CLEAR BMP AREAS

	A Soils	B Soils	C Soils	D Soils	Totals	Land Cover Rv
Forest/Open Space (acres)					0.00	0.00
Managed Turf (acres)			0.81		0.81	0.22
Impervious Cover (acres)			1.98		1.98	0.95
				Total	2.79	

Total Phosphorus Available for Removal in D.A. A (lb/yr)	4.70
Post Development Treatment Volume in D.A. A (ft^3)	7,475

Stormwater Best Management Practices (RR = Runoff Reduction)

–Select from dropdown lists–

Practice	Runoff Reduction Credit (%)	Managed Turf Credit Area (acres)	Impervious Cover Credit Area (acres)	Volume from Upstream Practice (ft^3)	Runoff Reduction (ft^3)	Remaining Runoff Volume (ft^3)	Total BMP Volume (ft^3)	Phosphorus Removal Efficiency (%)	Phosphorus Load from Upstream Practices (lb)	Untreated Phosphorus Load to Practice (lb)	Phosphorus Removed By Practice (lb)	Remaining Phosphorus Load (lb)	Downstream Practice to be Employed
8. Extended Detention Pond (RR)													
8.a. ED #1 (Spec #15)	0	0.81	1.98	0	0	7,475	7,475	15	0.00	4.69	0.70	3.99	None
8.b. ED #2 (Spec #15)	15			0	0	0	0	15	0.00	0.00	0.00	0.00	

TOTAL IMPERVIOUS COVER TREATED (ac)	1.98	AREA CHECK: OK.
TOTAL MANAGED TURF AREA TREATED (ac)	0.81	AREA CHECK: OK.

TOTAL PHOSPHORUS REMOVAL REQUIRED ON SITE (lb/yr)	0.50
TOTAL PHOSPHORUS AVAILABLE FOR REMOVAL IN D.A. A (lb/yr)	4.70
TOTAL PHOSPHORUS REMOVED WITHOUT RUNOFF REDUCTION PRACTICES IN D.A. A (lb/yr)	0.00
TOTAL PHOSPHORUS REMOVED WITH RUNOFF REDUCTION PRACTICES IN D.A. A (lb/yr)	0.70
TOTAL PHOSPHORUS LOAD REDUCTION ACHIEVED IN D.A. A (lb/yr)	0.70
TOTAL PHOSPHORUS REMAINING AFTER APPLYING BMP LOAD REDUCTIONS IN D.A. A (lb/yr)	3.99

SEE WATER QUALITY COMPLIANCE TAB FOR SITE COMPLIANCE CALCULATIONS

NITROGEN REMOVED WITH RUNOFF REDUCTION PRACTICES IN D.A. A (lb/yr)	3.36
NITROGEN REMOVED WITHOUT RUNOFF REDUCTION PRACTICES IN D.A. A (lb/yr)	0.00
TOTAL NITROGEN REMOVED IN D.A. A (lb/yr)	3.36

Site Results (Water Quality Compliance)

Area Checks	D.A. A	D.A. B	D.A. C	D.A. D	D.A. E	AREA CHECK
FOREST/OPEN SPACE (ac)	0.00	0.00	0.00	0.00	0.00	OK.
IMPERVIOUS COVER (ac)	1.98	0.00	0.00	0.00	0.00	OK.
IMPERVIOUS COVER TREATED (ac)	1.98	0.00	0.00	0.00	0.00	OK.
MANAGED TURF AREA (ac)	0.81	0.00	0.00	0.00	0.00	OK.
MANAGED TURF AREA TREATED (ac)	0.81	0.00	0.00	0.00	0.00	OK.
AREA CHECK	OK.	OK.	OK.	OK.	OK.	

Site Treatment Volume (ft^3)	
	9,508

Runoff Reduction Volume and TP By Drainage Area

	D.A. A	D.A. B	D.A. C	D.A. D	D.A. E	TOTAL
RUNOFF REDUCTION VOLUME ACHIEVED (ft^3)	0	0	0	0	0	0
TP LOAD AVAILABLE FOR REMOVAL (lb/yr)	4.70	0.00	0.00	0.00	0.00	4.70
TP LOAD REDUCTION ACHIEVED (lb/yr)	0.70	0.00	0.00	0.00	0.00	0.70
TP LOAD REMAINING (lb/yr)	3.99	0.00	0.00	0.00	0.00	3.99
NITROGEN LOAD REDUCTION ACHIEVED (lb/yr)	3.36	0.00	0.00	0.00	0.00	3.36

Total Phosphorus

FINAL POST-DEVELOPMENT TP LOAD (lb/yr)	5.97
TP LOAD REDUCTION REQUIRED (lb/yr)	0.50
TP LOAD REDUCTION ACHIEVED (lb/yr)	0.70
TP LOAD REMAINING (lb/yr)	5.27
REMAINING TP LOAD REDUCTION REQUIRED (lb/yr)	0.00 **

** TARGET TP REDUCTION EXCEEDED BY 0.2 LB/YEAR **

Total Nitrogen (For Information Purposes)

POST-DEVELOPMENT LOAD (lb/yr)	42.74
NITROGEN LOAD REDUCTION ACHIEVED (lb/yr)	3.36
REMAINING POST-DEVELOPMENT NITROGEN LOAD (lb/yr)	39.38

DEQ Virginia Runoff Reduction Method New Development Compliance Spreadsheet - **Version 3.0**

BMP Design Specifications List: **2013 Draft Stds & Specs**

Site Summary

Project Title: CULPEPER SPORTS COMPLEX
Date: 45243

Total Rainfall = 43 inches

Site Land Cover Summary

	A soils	B Soils	C Soils	D Soils	Totals	% of Total
Forest/Open (acres)	0.00	0.00	10.20	0.00	10.20	76
Managed Turf (acres)	0.00	0.00	1.07	0.00	1.07	8
Impervious Cover (acres)	0.00	0.00	2.08	0.00	2.08	16
					13.35	100

Site Tv and Land Cover Nutrient Loads

Site Rv	0.20
Treatment Volume (ft^3)	9,508
TP Load (lb/yr)	5.97
TN Load (lb/yr)	42.74

Total TP Load Reduction Required (lb/yr)	0.50

Site Compliance Summary

Total Runoff Volume Reduction (ft^3)	0
Total TP Load Reduction Achieved (lb/yr)	0.70
Total TN Load Reduction Achieved (lb/yr)	3.36
Remaining Post Development TP Load (lb/yr)	5.27
Remaining TP Load Reduction (lb/yr) Required	0.00

** TARGET TP REDUCTION EXCEEDED BY 0.2 LB/YEAR **

Drainage Area Summary

	D.A. A	D.A. B	D.A. C	D.A. D	D.A. E	Total
Forest/Open (acres)	0.00	0.00	0.00	0.00	0.00	0.00
Managed Turf (acres)	0.81	0.00	0.00	0.00	0.00	0.81
Impervious Cover (acres)	1.98	0.00	0.00	0.00	0.00	1.98
Total Area (acres)	**2.79**	**0.00**	**0.00**	**0.00**	**0.00**	**2.79**

Drainage Area Compliance Summary

	D.A. A	D.A. B	D.A. C	D.A. D	D.A. E	Total
TP Load Reduced (lb/yr)	0.70	0.00	0.00	0.00	0.00	0.70
TN Load Reduced (lb/yr)	3.36	0.00	0.00	0.00	0.00	3.36

Drainage Area A Summary

Land Cover Summary

	A Soils	B Soils	C Soils	D Soils	Total	% of Total
Forest/Open (acres)	0.00	0.00	0.00	0.00	0.00	0
Managed Turf (acres)	0.00	0.00	0.81	0.00	0.81	29
Impervious Cover (acres)	0.00	0.00	1.98	0.00	1.98	71
					2.79	

BMP Selections

Practice	Managed Turf Credit Area (acres)	Impervious Cover Credit Area (acres)	BMP Treatment Volume (ft^3)	TP Load from Upstream Practices (lbs)	Untreated TP Load to Practice (lbs)	TP Removed (lb/yr)	TP Remaining (lb/yr)	Downstream Treatment to be Employed
8.a. ED #1 (Spec #15)	**0.81**	**1.98**	**7,474.90**	**0.00**	**4.69**	**0.70**	**3.99**	**None**

Total Impervious Cover Treated (acres)	1.98
Total Turf Area Treated (acres)	0.81
Total TP Load Reduction Achieved in D.A. (lb/yr)	0.70
Total TN Load Reduction Achieved in D.A. (lb/yr)	3.36

Runoff Volume and CN Calculations

	1-year storm	2-year storm	10-year storm
Target Rainfall Event (in)	2.70	3.30	5.00

Drainage Areas	RV & CN	Drainage Area A	Drainage Area B	Drainage Area C	Drainage Area D	Drainage Area E
CN		91	0	0	0	0
RR (ft^3)		0	0	0	0	0
1-year return period	**RV wo RR (ws-in)**	1.79	0.00	0.00	0.00	0.00
	RV w RR (ws-in)	1.79	0.00	0.00	0.00	0.00
	CN adjusted	91	0	0	0	0
2-year return period	**RV wo RR (ws-in)**	2.35	0.00	0.00	0.00	0.00
	RV w RR (ws-in)	2.35	0.00	0.00	0.00	0.00
	CN adjusted	91	0	0	0	0
10-year return period	**RV wo RR (ws-in)**	3.98	0.00	0.00	0.00	0.00
	RV w RR (ws-in)	3.98	0.00	0.00	0.00	0.00
	CN adjusted	91	0	0	0	0

COMMONWEALTH OF VIRGINIA
MARVIN T. HINCHEY
LIC. NO. 017596
01-03-2024
PROFESSIONAL ENGINEER

No.	Date	Issue Notes
3	1/3/2024	SDI comments
2	12/7/2023	Planning Commission Bid Plans

Appr | Zone | Revision Notes | Date | No. | Issue Notes

Date | Revision | Project No. 23703.culpeper | Drawing Scale | CLI File Name | Drawn By | Checked By | Approved By | Project Manager | Project Leader

NORMAN SMITH ARCHITECTURE
1514 Madison Road, Suite 1
3637 Stillwells Road, Stevensville, MD 21666
T 202.462.5898 www.normansmitharchitecture.com

HINCHEY & BAINES, P.L.C.
ENGINEERING AND LAND PLANNING
325 East Davis Street
Culpeper, Virginia 22701
Phone (540) 829-2201
FAX (540) 829-2218

Culpeper County
Community Recreation Project
16388 Competition Drive
Culpeper, VA

STORMWATER MANAGEMENT
COMPUTATIONS - VRRM

Scale | Sheet Title | Sheet No: C14 of 22

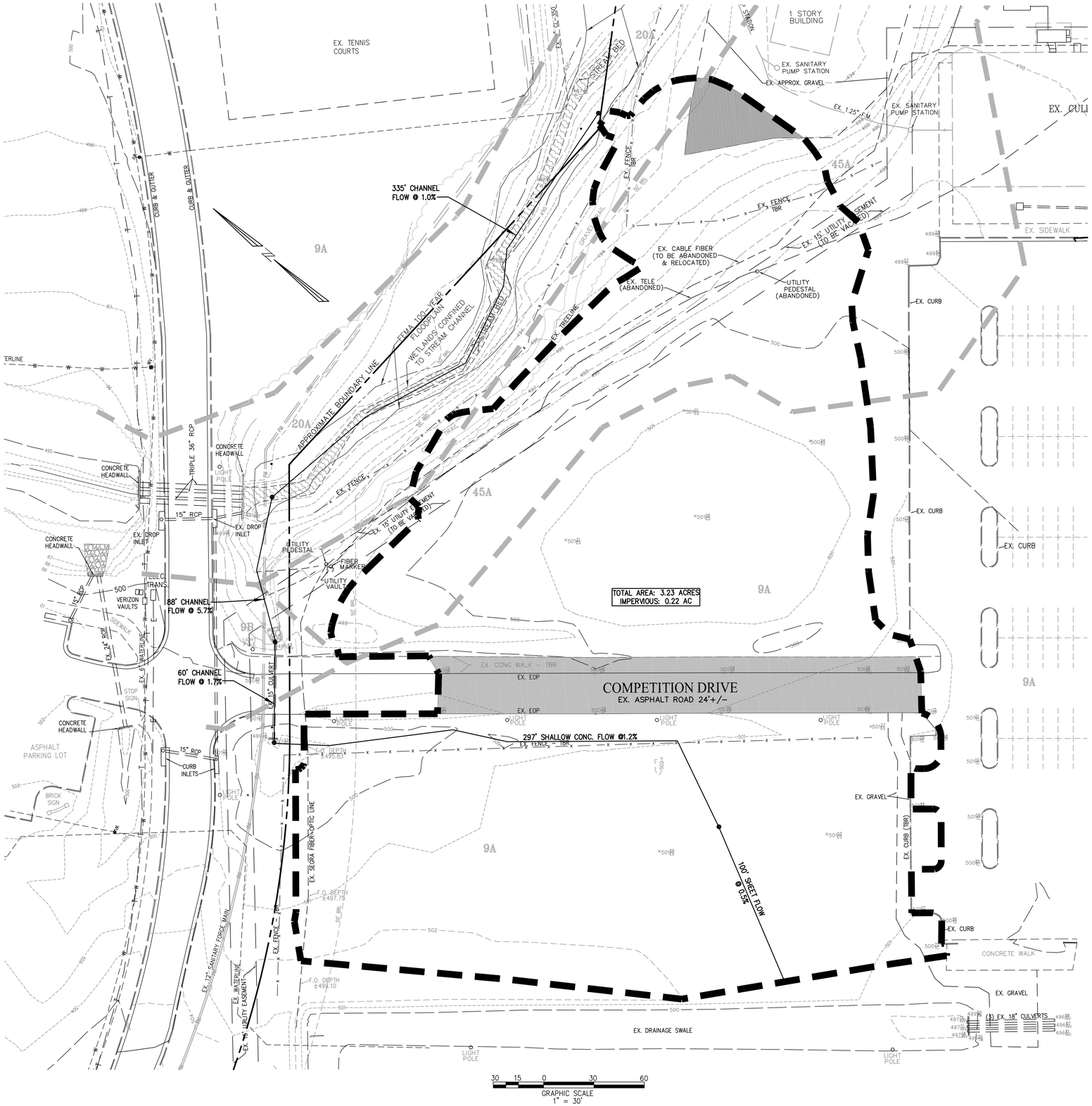

LEGEND

- DRAINAGE DIVIDE/"SITE" LIMITS
- IMPERVIOUS AREA
- SOILS TYPE DIVIDES

DRAINAGE AREA TABULATION

(ALL 'C' SOILS)

IMPERVIOUS:	0.22 ACRES	(CN=98)
TURF:	3.01 ACRES	(CN=74)
TOTAL	3.23 ACRES	

SOIL DATA

MAP SYMBOL	HYDRIC (*)	K FACTOR WHOLE SOIL	K FACTOR ROCK FREE	HYDRO-LOGIC	DEPTH FT.	DEPTH TO WATER FT.	SAT HYDRO. COND.	SOIL NAME	AVAILABLE WATER CAPACITY (SHRINK/SWELL)	FLOODS
9A	5%	0.43	0.43	C	2.3	6+	MOD HI	CLOVER-PENN COMPLEX 0-2% SLOPES	0.13	N
20A	95%	0.37	0.37	C	2.3	6+	MOD HI	ELBERT SILT LOAM 0-2%, OCC. PONDED	0.11	FREQUENT
45A	5%	0.43	0.43	C	2.5	6+	MOD HI	PENN-NESTORIA COMPLEX 0-2% SLOPES	0.13	N

AS LISTED BY THE USDA, SOIL CONSERVATION SERVICE

COMMONWEALTH OF VIRGINIA
MARVIN T. HINCHEY
LIC. NO. 017596
01-03-2024
PROFESSIONAL ENGINEER

No.	Date	Revision Notes	Zone	Appr
3	1/3/2024	SDI comments		
2	11/27/2023	Release for Bid		
No.	Date	Issue Notes	Class	

Date: 23703 cullpeper
Drawing Code:
CAD File Name:
Project Manager:
Drawn by:
Designed By:
Checked By:
Approved By:
Project File:

Design firm: NORMAN SMITH ARCHITECTURE
1341 H Street, Washington, DC 20002-4906
3637 Slate Mills Road, Sperryville, VA 22740
T 202.462.5886 www.normansmitharchitecture.com

Consultant: HINCHEY & BAINES, PLC
ENGINEERING AND LAND PLANNING
125 East Davis Street
Culpeper, Virginia 22701
Phone (540) 829-2220
FAX (540) 829-2229

Project Title: Culpeper County Community Pool Project 16388 Competition Drive Culpeper, VA

Sheet Title: PRE-DEVELOPMENT DRAINAGE MAP - QUALITY

Scale:

Sheet No: C15 of 22

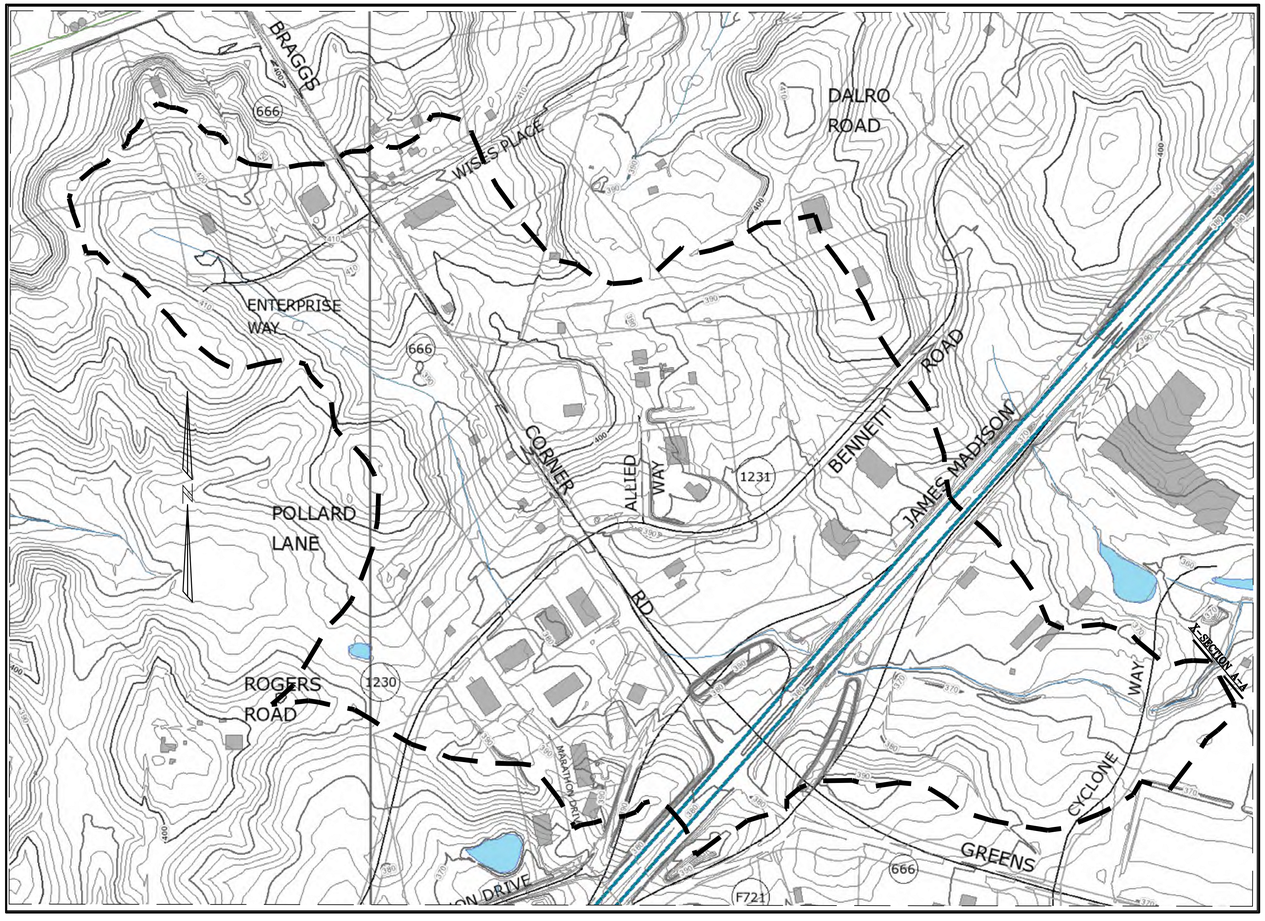

DRAINAGE DIVIDE MAP

TOTAL DRAINAGE AREA TO AA = 173 ACRES
10-YEAR PEAK FLOW = 200 cfs (source: USGS StreamStats)

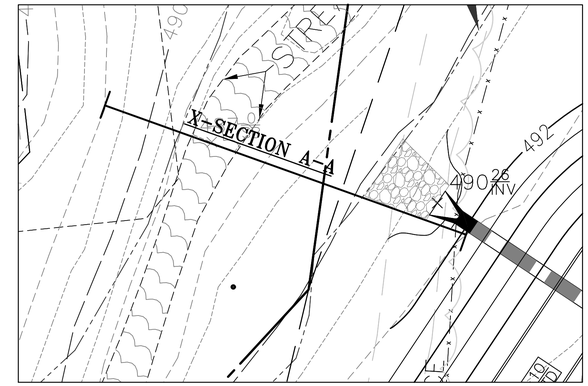

X-SECTION A-A
PLAN VIEW

10 5 0 10 20
GRAPHIC SCALE
SCALE: 1" = 10'

Project Description	
Worksheet	Irregular Channel - 1
Flow Element	Irregular Channel
Method	Manning's Formula
Solve For	Channel Depth

Input Data		
Slope	0.020900	ft/ft
Discharge	200.00	cfs

Options	
Current Roughness Method	Improved Lotter's Method
Open Channel Weighting Method	Improved Lotter's Method
Closed Channel Weighting Methoc	Horton's Method

Results		
Mannings Coefficient	0.035	
Water Surface Elevation	489.05	ft
Elevation Range	487.00 to 492.00	
Flow Area	27.4	ft²
Wetted Perimeter	21.16	ft
Top Width	20.45	ft
Actual Depth	2.05	ft
Critical Elevation	489.17	ft
Critical Slope	0.016758	ft/ft
Velocity	7.29	ft/s
Velocity Head	0.83	ft
Specific Energy	489.87	ft
Froude Number	1.11	
Flow Type	Supercritical	

Roughness Segments

Start Station	End Station	Mannings Coefficient
0+00	0+07	0.100
0+07	0+37	0.035
0+37	0+53	0.100

Natural Channel Points

Station (ft)	Elevation (ft)
0+00	492.00
0+03	491.00
0+07	490.00
0+09	489.00
0+11	488.00
0+13	487.00
0+20	487.00
0+24	488.00
0+29	489.00
0+37	490.00
0+44	491.00
0+53	492.00

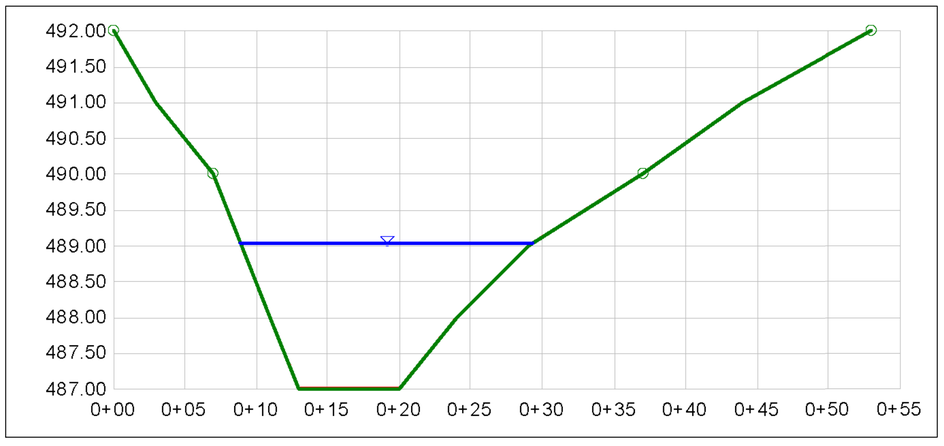

X-SECTION A-A

Peak-Flow Statistics

Peak-Flow Statistics Parameters [Piedmont Mesozoic 2011 5144]

Parameter Code	Parameter Name	Value	Units	Min Limit	Max Limit
DRNAREA	Drainage Area	0.27	square miles	0.06	7866

Peak-Flow Statistics Flow Report [Piedmont Mesozoic 2011 5144]

PIL: Lower 90% Prediction Interval, PIU: Upper 90% Prediction Interval, ASEp: Average Standard Error of Prediction, SE: Standard Error (other -- see report)

Statistic	Value	Unit	ASEp
50-percent AEP flood	39	ft^3/s	41
42.9-percent AEP flood	48.7	ft^3/s	42
20-percent AEP flood	110	ft^3/s	42
10-percent AEP flood	200	ft^3/s	41

COMMONWEALTH OF VIRGINIA
MARVIN T. HINCHEY
LIC. NO. 017596
01-03-2024
PROFESSIONAL ENGINEER

NARRATIVE:
THIS SHEET PROVIDES INFORMATION TO DETERMINE EXISTING CONDITIONS OF THE RECEIVING STREAM CHANNEL FOR THE 10-YEAR STORM. THE 10-YEAR PEAK RUNOFF RATE WAS TAKEN FROM USGS STREAMSTATS AND WAS DETERMINED TO BE 200 CFS. THE EXISTING CHANNEL IS APPROXIMATELY 3' DEEP AND THE 10 YEAR WATER SURFACE WILL BE APPROXIMATELY 2.05'. THE FLOW WILL BE CONTAINED WITHIN THE CHANNEL.

No.	Date	Issue Notes
3	1/3/2024	SDI comments
2	1/12/2023	Release for Bid
1	12/22/2022	permit submittal

NORMAN SMITH ARCHITECTURE
1341 H Street, Washington, DC 20002-4906
3637 Slate Mills Road, Sperryville, VA 22740
T 202.462.5886 www.normansmitharchitecture.com

HINCHEY & BAINES, PLC
ENGINEERING AND PLANNING
126 East Davis Street Phone (540) 829-2220
Culpeper, Virginia 22701 FAX (540) 829-2239

Culpeper County
Community Pool Project
16388 Competition Drive
Culpeper, VA

ANALYSIS OF DOWNSTREAM CHANNEL

Sheet No. C16 of 22

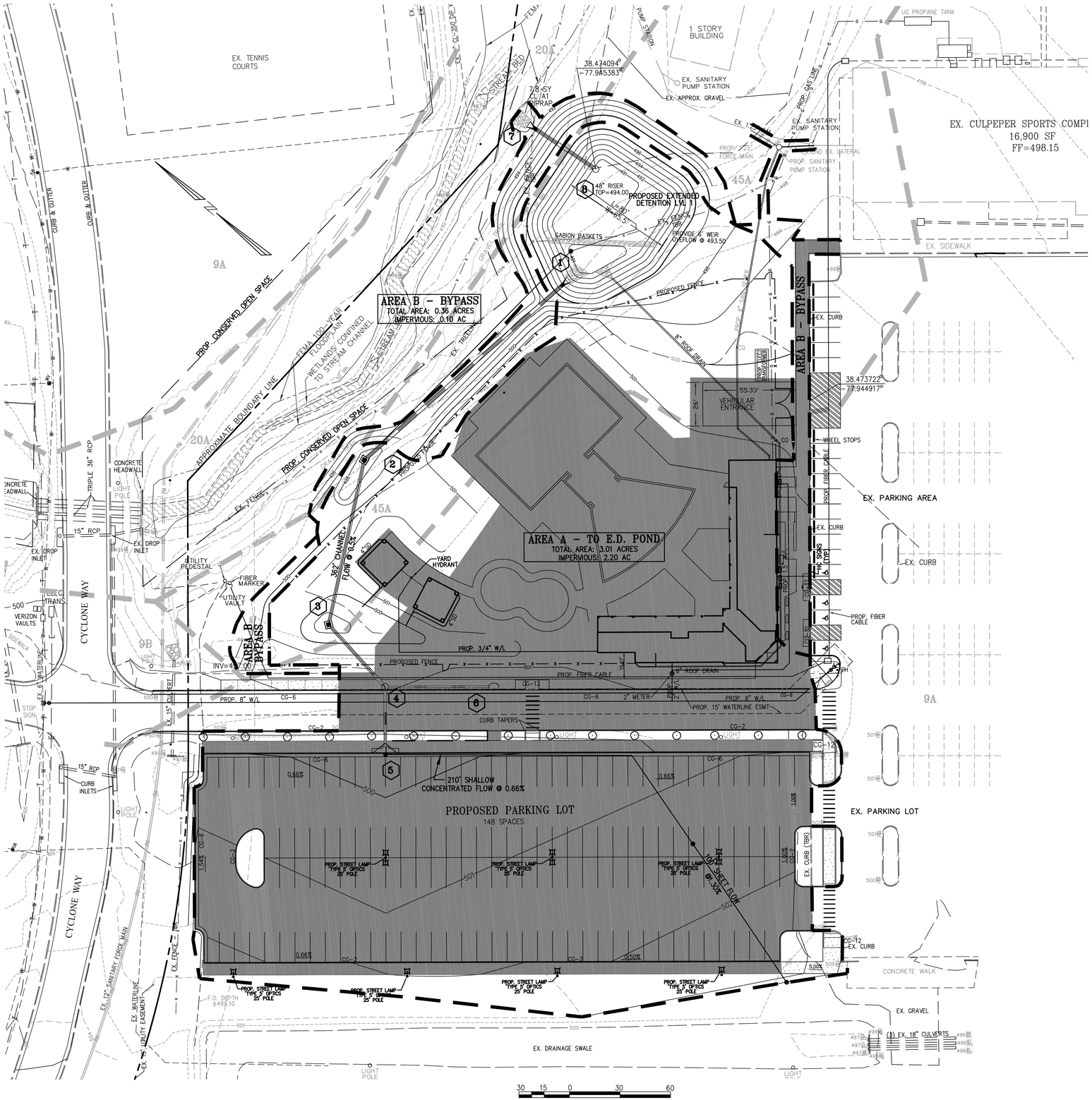

LEGEND

- DRAINAGE DIVIDE/"SITE" LIMITS
- IMPERVIOUS AREA
- SOILS TYPE DIVIDES

DRAINAGE AREA TABULATION

(ALL 'C' SOILS)

AREA A – TO E.D. POND

IMPERVIOUS:	2.20 ACRES	(CN=98)
TURF:	0.81 ACRES	(CN=74)
TOTAL	3.01 ACRES	

AREA B – BYPASS

IMPERVIOUS:	0.10 ACRES	(CN=98)
TURF:	0.26 ACRES	(CN=74)
TOTAL	0.36 ACRES	

COMMONWEALTH OF VIRGINIA
MARVIN T. HINCHEY
LIC. NO. 017596
01-03-2024
PROFESSIONAL ENGINEER

No.	Date	Issue Notes
3	1/3/2024	SDI comments
2	1/12/2023	Release for Bid
1	11/14/2022	Preliminary

No.	Date	Revision Notes	Zone	Appr

Project Title: Culpeper County Community Pool Project 16388 Competition Drive Culpeper, VA

Sheet Title: POST-DEVELOPMENT DRAINAGE MAP - QUANTITY

Scale:

Sheet No.: C17 of 22

Design Firm: NORMAN SMITH ARCHITECTURE 1341 H Street, Washington, DC 20002-4906 3637 Slate Mills Road, Sperryville, VA 22740 T: 202.462.3888 www.normansmitharchitecture.com

Civil Firm: HINCHEY & BAINES, PLLC ENGINEERING AND LAND PLANNING 125 East Davis Street Suite 101 Culpeper, Virginia 22701 Phone (540) 829-2220 FAX (540) 829-2239

Project Manager: Mr. Marvin T. Hinchey

Drawn by: LKM

Checked by: MTH

Project No.: 23703.culpeper

Drawing Date: 12/21/2023

CAD File Name: 23703.dwg

HYDROGRAPHS – 1-YEAR STORM

Hydrograph Summary Report

Hydraflow Hydrographs by Intelisolve v9.23

Hyd. No.	Hydrograph type (origin)	Peak flow (cfs)	Time interval (min)	Time to peak (min)	Hyd. volume (cuft)	Inflow hyd(s)	Maximum elevation (ft)	Total strge used (cuft)	Hydrograph description
1	SCS Runoff	3.163	2	724	9,358	----	------	------	PRE-DEVELOPMENT
2	SCS Runoff	9.225	2	716	19,249	----	------	------	POST TO ED POND
3	Reservoir	0.973	2	740	19,242	2	494.07	10,451	ROUTING
4	SCS Runoff	0.665	2	718	1,332	----	------	------	POST BYPASS
5	Combine	1.055	2	738	20,574	3, 4	------	------	TOTAL POST-DEVELOPMENT
9	SCS Runoff	9.550	2	716	19,619	----	------	------	POST TO ED POND

Hydrograph Report

Hydraflow Hydrographs by Intelisolve v9.23 — Tuesday, Nov 14, 2023

Hyd. No. 1

PRE-DEVELOPMENT

Hydrograph type	= SCS Runoff	Peak discharge	= 3.163 cfs
Storm frequency	= 1 yrs	Time to peak	= 724 min
Time interval	= 2 min	Hyd. volume	= 9,358 cuft
Drainage area	= 3.230 ac	Curve number	= 76*
Basin Slope	= 0.0 %	Hydraulic length	= 0 ft
Tc method	= TR55	Time of conc. (Tc)	= 16.20 min
Total precip.	= 2.70 in	Distribution	= Type II
Storm duration	= 24 hrs	Shape factor	= 484

* Composite (Area/CN) = [(3.010 x 74) + (0.220 x 98)] / 3.230

Hyd. No. 2

POST TO ED POND

Hydrograph type	= SCS Runoff	Peak discharge	= 9.225 cfs
Storm frequency	= 1 yrs	Time to peak	= 716 min
Time interval	= 2 min	Hyd. volume	= 19,249 cuft
Drainage area	= 3.010 ac	Curve number	= 92*
Basin Slope	= 0.0 %	Hydraulic length	= 0 ft
Tc method	= TR55	Time of conc. (Tc)	= 5.20 min
Total precip.	= 2.70 in	Distribution	= Type II
Storm duration	= 24 hrs	Shape factor	= 484

* Composite (Area/CN) = [(2.200 x 98) + (0.810 x 74)] / 3.010

Hyd. No. 3

ROUTING

Hydrograph type	= Reservoir	Peak discharge	= 0.973 cfs
Storm frequency	= 1 yrs	Time to peak	= 740 min
Time interval	= 2 min	Hyd. volume	= 19,242 cuft
Inflow hyd. No.	= 2 - POST TO ED POND	Max. Elevation	= 494.07 ft
Reservoir name	= POND	Max. Storage	= 10,451 cuft

Storage Indication method used.

Pond Report

Hydraflow Hydrographs by Intelisolve v9.23 — Tuesday, Nov 14, 2023

Pond No. 1 - POND

Pond Data

Contours - User-defined contour areas. Average end area method used for volume calculation. Begining Elevation = 490.50 ft

Stage / Storage Table

Stage (ft)	Elevation (ft)	Contour area (sqft)	Incr. Storage (cuft)	Total storage (cuft)
0.00	490.50	00	0	0
0.50	491.00	1,089	272	272
1.50	492.00	3,161	2,125	2,397
2.50	493.00	3,849	3,505	5,902
3.50	494.00	4,594	4,222	10,124
4.50	495.00	5,395	4,995	15,118
5.50	496.00	6,253	5,824	20,942
6.60	497.10	7,262	7,433	28,376

Culvert / Orifice Structures

	[A]	[B]	[C]	[PrfRsr]
Rise (in)	= 24.00	1.50	0.00	0.00
Span (in)	= 24.00	1.50	0.00	0.00
No. Barrels	= 1	1	0	0
Invert El. (ft)	= 490.50	490.50	0.00	0.00
Length (ft)	= 48.00	0.00	0.00	0.00
Slope (%)	= 0.50	0.00	0.00	n/a
N-Value	= .012	.024	.013	n/a
Orifice Coeff.	= 0.60	0.60	0.60	0.60
Multi-Stage	= n/a	Yes	No	No

Weir Structures

	[A]	[B]	[C]	[D]
Crest Len (ft)	= 12.57	Inactive	0.00	0.00
Crest El. (ft)	= 494.00	495.10	0.00	0.00
Weir Coeff.	= 3.33	3.33	3.33	3.33
Weir Type	= Riser	Broad	---	---
Multi-Stage	= Yes	No	No	No

Exfil.(in/hr) = 0.000 (by Wet area)
TW Elev. (ft) = 0.00

Note: Culvert/Orifice outflows are analyzed under inlet (ic) and outlet (oc) control. Weir risers checked for orifice conditions (ic) and submergence (s).

Stage / Storage / Discharge Table

Stage ft	Storage cuft	Elevation ft	Civ A cfs	Civ B cfs	Civ C cfs	PrfRsr cfs	Wr A cfs	Wr B cfs	Wr C cfs	Wr D cfs	Exfil cfs	User cfs	Total cfs
0.00	0	490.50	0.00	0.00	---	---	0.00	0.00	---	---	---	---	0.000
0.50	272	491.00	0.04 ic	0.04 ic	---	---	0.00	0.00	---	---	---	---	0.038
1.50	2,397	492.00	0.07 ic	0.07 ic	---	---	0.00	0.00	---	---	---	---	0.070
2.50	5,902	493.00	0.09 ic	0.09 ic	---	---	0.00	0.00	---	---	---	---	0.091
3.50	10,124	494.00	0.11 ic	0.11 ic	---	---	0.00	0.00	---	---	---	---	0.108
4.50	15,118	495.00	27.33 ic	0.03 ic	---	---	27.30 s	0.00	---	---	---	---	27.33
5.50	20,942	496.00	31.93 ic	0.01 ic	---	---	31.90 s	0.00	---	---	---	---	31.91
6.60	28,376	497.10	35.74 ic	0.01 ic	---	---	35.69 s	0.00	---	---	---	---	35.70

Hyd. No. 4

POST BYPASS

Hydrograph type	= SCS Runoff	Peak discharge	= 0.665 cfs
Storm frequency	= 1 yrs	Time to peak	= 718 min
Time interval	= 2 min	Hyd. volume	= 1,332 cuft
Drainage area	= 0.360 ac	Curve number	= 81*
Basin Slope	= 0.0 %	Hydraulic length	= 0 ft
Tc method	= USER	Time of conc. (Tc)	= 5.00 min
Total precip.	= 2.70 in	Distribution	= Type II
Storm duration	= 24 hrs	Shape factor	= 484

* Composite (Area/CN) = [(0.100 x 98) + (0.260 x 74)] / 0.360

Hyd. No. 5

TOTAL POST-DEVELOPMENT

Hydrograph type	= Combine	Peak discharge	= 1.055 cfs
Storm frequency	= 1 yrs	Time to peak	= 738 min
Time interval	= 2 min	Hyd. volume	= 20,574 cuft
Inflow hyds.	= 3, 4	Contrib. drain. area	= 0.360 ac

HYDROGRAPHS – 2-YEAR STORM

Hydrograph Summary Report

Hydraflow Hydrographs by Intelisolve v9.23

Hyd. No.	Hydrograph type (origin)	Peak flow (cfs)	Time interval (min)	Time to peak (min)	Hyd. volume (cuft)	Inflow hyd(s)	Maximum elevation (ft)	Total strge used (cuft)	Hydrograph description
1	SCS Runoff	4.848	2	722	13,971	----	------	------	PRE-DEVELOPMENT
2	SCS Runoff	11.83	2	716	25,053	----	------	------	POST TO ED POND
3	Reservoir	6.610	2	722	25,045	2	494.30	11,565	ROUTING
4	SCS Runoff	0.940	2	718	1,897	----	------	------	POST BYPASS
5	Combine	7.095	2	722	26,942	3, 4	------	------	TOTAL POST-DEVELOPMENT
9	SCS Runoff	12.47	2	716	25,935	----	------	------	POST TO ED POND

Hydrograph Report

Hydraflow Hydrographs by Intelisolve v9.23 — Tuesday, Nov 14, 2023

Hyd. No. 1

PRE-DEVELOPMENT

Hydrograph type	= SCS Runoff	Peak discharge	= 4.848 cfs
Storm frequency	= 2 yrs	Time to peak	= 722 min
Time interval	= 2 min	Hyd. volume	= 13,971 cuft
Drainage area	= 3.230 ac	Curve number	= 76*
Basin Slope	= 0.0 %	Hydraulic length	= 0 ft
Tc method	= TR55	Time of conc. (Tc)	= 16.20 min
Total precip.	= 3.30 in	Distribution	= Type II
Storm duration	= 24 hrs	Shape factor	= 484

* Composite (Area/CN) = [(3.010 x 74) + (0.220 x 98)] / 3.230

Hyd. No. 2

POST TO ED POND

Hydrograph type	= SCS Runoff	Peak discharge	= 11.83 cfs
Storm frequency	= 2 yrs	Time to peak	= 716 min
Time interval	= 2 min	Hyd. volume	= 25,053 cuft
Drainage area	= 3.010 ac	Curve number	= 92*
Basin Slope	= 0.0 %	Hydraulic length	= 0 ft
Tc method	= TR55	Time of conc. (Tc)	= 5.20 min
Total precip.	= 3.30 in	Distribution	= Type II
Storm duration	= 24 hrs	Shape factor	= 484

* Composite (Area/CN) = [(2.200 x 98) + (0.810 x 74)] / 3.010

Hyd. No. 3

ROUTING

Hydrograph type	= Reservoir	Peak discharge	= 6.610 cfs
Storm frequency	= 2 yrs	Time to peak	= 722 min
Time interval	= 2 min	Hyd. volume	= 25,045 cuft
Inflow hyd. No.	= 2 - POST TO ED POND	Max. Elevation	= 494.30 ft
Reservoir name	= POND	Max. Storage	= 11,565 cuft

Storage Indication method used.

Hyd. No. 4

POST BYPASS

Hydrograph type	= SCS Runoff	Peak discharge	= 0.940 cfs
Storm frequency	= 2 yrs	Time to peak	= 718 min
Time interval	= 2 min	Hyd. volume	= 1,897 cuft
Drainage area	= 0.360 ac	Curve number	= 81*
Basin Slope	= 0.0 %	Hydraulic length	= 0 ft
Tc method	= USER	Time of conc. (Tc)	= 5.00 min
Total precip.	= 3.30 in	Distribution	= Type II
Storm duration	= 24 hrs	Shape factor	= 484

* Composite (Area/CN) = [(0.100 x 98) + (0.260 x 74)] / 0.360

Hyd. No. 5

TOTAL POST-DEVELOPMENT

Hydrograph type	= Combine	Peak discharge	= 7.095 cfs
Storm frequency	= 2 yrs	Time to peak	= 722 min
Time interval	= 2 min	Hyd. volume	= 26,942 cuft
Inflow hyds.	= 3, 4	Contrib. drain. area	= 0.360 ac

HYDROGRAPHS – 10-YEAR STORM

Hydrograph Summary Report

Hydraflow Hydrographs by Intelisolve v9.23

Hyd. No.	Hydrograph type (origin)	Peak flow (cfs)	Time interval (min)	Time to peak (min)	Hyd. volume (cuft)	Inflow hyd(s)	Maximum elevation (ft)	Total strge used (cuft)	Hydrograph description
1	SCS Runoff	10.33	2	722	28,985	----	------	------	PRE-DEVELOPMENT
2	SCS Runoff	19.15	2	716	41,888	----	------	------	POST TO ED POND
3	Reservoir	18.17	2	718	41,881	2	494.57	12,975	ROUTING
4	SCS Runoff	1.793	2	716	3,657	----	------	------	POST BYPASS
5	Combine	19.93	2	718	45,538	3, 4	------	------	TOTAL POST-DEVELOPMENT
9	SCS Runoff	20.72	2	716	44,456	----	------	------	POST TO ED POND

Hydrograph Report

Hydraflow Hydrographs by Intelisolve v9.23 — Tuesday, Nov 14, 2023

Hyd. No. 1

PRE-DEVELOPMENT

Hydrograph type	= SCS Runoff	Peak discharge	= 10.33 cfs
Storm frequency	= 10 yrs	Time to peak	= 722 min
Time interval	= 2 min	Hyd. volume	= 28,985 cuft
Drainage area	= 3.230 ac	Curve number	= 76*
Basin Slope	= 0.0 %	Hydraulic length	= 0 ft
Tc method	= TR55	Time of conc. (Tc)	= 16.20 min
Total precip.	= 5.00 in	Distribution	= Type II
Storm duration	= 24 hrs	Shape factor	= 484

* Composite (Area/CN) = [(3.010 x 74) + (0.220 x 98)] / 3.230

Hyd. No. 2

POST TO ED POND

Hydrograph type	= SCS Runoff	Peak discharge	= 19.15 cfs
Storm frequency	= 10 yrs	Time to peak	= 716 min
Time interval	= 2 min	Hyd. volume	= 41,888 cuft
Drainage area	= 3.010 ac	Curve number	= 92*
Basin Slope	= 0.0 %	Hydraulic length	= 0 ft
Tc method	= TR55	Time of conc. (Tc)	= 5.20 min
Total precip.	= 5.00 in	Distribution	= Type II
Storm duration	= 24 hrs	Shape factor	= 484

* Composite (Area/CN) = [(2.200 x 98) + (0.810 x 74)] / 3.010

Hyd. No. 3

ROUTING

Hydrograph type	= Reservoir	Peak discharge	= 18.17 cfs
Storm frequency	= 10 yrs	Time to peak	= 718 min
Time interval	= 2 min	Hyd. volume	= 41,881 cuft
Inflow hyd. No.	= 2 - POST TO ED POND	Max. Elevation	= 494.57 ft
Reservoir name	= POND	Max. Storage	= 12,975 cuft

Storage Indication method used.

Hyd. No. 4

POST BYPASS

Hydrograph type	= SCS Runoff	Peak discharge	= 1.793 cfs
Storm frequency	= 10 yrs	Time to peak	= 716 min
Time interval	= 2 min	Hyd. volume	= 3,657 cuft
Drainage area	= 0.360 ac	Curve number	= 81*
Basin Slope	= 0.0 %	Hydraulic length	= 0 ft
Tc method	= USER	Time of conc. (Tc)	= 5.00 min
Total precip.	= 5.00 in	Distribution	= Type II
Storm duration	= 24 hrs	Shape factor	= 484

* Composite (Area/CN) = [(0.100 x 98) + (0.260 x 74)] / 0.360

Hyd. No. 5

TOTAL POST-DEVELOPMENT

Hydrograph type	= Combine	Peak discharge	= 19.93 cfs
Storm frequency	= 10 yrs	Time to peak	= 718 min
Time interval	= 2 min	Hyd. volume	= 45,538 cuft
Inflow hyds.	= 3, 4	Contrib. drain. area	= 0.360 ac

HYDROGRAPHS – 100-YEAR STORM

Hyd. No. 3

ROUTING

Hydrograph type	= Reservoir	Peak discharge	= 27.12 cfs
Storm frequency	= 100 yrs	Time to peak	= 720 min
Time interval	= 2 min	Hyd. volume	= 73,156 cuft
Inflow hyd. No.	= 2 - POST TO ED POND	Max. Elevation	= 495.01 ft
Reservoir name	= POND	Max. Storage	= 14,973 cuft

Storage Indication method used.

TR55 Tc Worksheet

Hydraflow Hydrographs by Ir

Hyd. No. 1

PRE-DEVELOPMENT

Description	A	B	C	Totals
Sheet Flow				
Manning's n-value	= 0.150	0.011	0.011	
Flow length (ft)	= 100.0	0.0	0.0	
Two-year 24-hr precip. (in)	= 3.50	0.00	0.00	
Land slope (%)	= 1.00	0.00	0.00	
Travel Time (min)	= 12.36 +	0.00 +	0.00 =	12.36
Shallow Concentrated Flow				
Flow length (ft)	= 297.00	0.00	0.00	
Watercourse slope (%)	= 1.20	0.00	0.00	
Surface description	= Unpaved	Paved	Paved	
Average velocity (ft/s)	= 1.77	0.00	0.00	
Travel Time (min)	= 2.80 +	0.00 +	0.00 =	2.80
Channel Flow				
X sectional flow area (sqft)	= 3.00	1.76	20.00	
Wetted perimeter (ft)	= 6.00	4.71	10.00	
Channel slope (%)	= 1.70	5.70	1.00	
Manning's n-value	= 0.026	0.013	0.030	
Velocity (ft/s)	= 4.70	14.15	7.90	
Flow length (ft)	= 60.0	88.0	335.0	
Travel Time (min)	= 0.21 +	0.10 +	0.71 =	1.02
Total Travel Time, Tc				**16.20 min**

TR55 Tc Worksheet

Hydraflow Hydrographs by

Hyd. No. 2

POST TO ED POND

Description	A	B	C	Totals
Sheet Flow				
Manning's n-value	= 0.013	0.011	0.011	
Flow length (ft)	= 100.0	0.0	0.0	
Two-year 24-hr precip. (in)	= 3.50	0.00	0.00	
Land slope (%)	= 1.30	0.00	0.00	
Travel Time (min)	= 1.57 +	0.00 +	0.00 =	1.57
Shallow Concentrated Flow				
Flow length (ft)	= 210.00	0.00	0.00	
Watercourse slope (%)	= 0.66	0.00	0.00	
Surface description	= Paved	Paved	Paved	
Average velocity (ft/s)	= 1.65	0.00	0.00	
Travel Time (min)	= 2.12 +	0.00 +	0.00 =	2.12
Channel Flow				
X sectional flow area (sqft)	= 2.41	0.00	0.00	
Wetted perimeter (ft)	= 5.50	0.00	0.00	
Channel slope (%)	= 0.50	0.00	0.00	
Manning's n-value	= 0.015	0.000	0.015	
Velocity (ft/s)	= 4.04	0.00	0.00	
Flow length (ft)	= 362.0	0.0	0.0	
Travel Time (min)	= 1.49 +	0.00 +	0.00 =	1.49
Total Travel Time, Tc				**5.20 min**

STORMWATER MANAGEMENT NARRATIVE

This plan proposes a central stormwater management facility for future construction at the Culpeper County Sports Complex. The future construction will include a community pool and a parking lot. The proposed impervious areas for the pool and parking lot are indicated on these plans. Stormwater management must meet water quality and water quantity requirements. Presently runoff from these areas flows to a flood plain area and a small stream running through the middle of the property and thence into Jonas Run.

Post-development, runoff from the developed area (including all new impervious area) will be directed to a proposed Extended Detention Facility along the northern edge of the development area, adjacent to the floodplain. The area around the future pool complex flows directly to the extended detention facility while runoff from the future parking area will be conveyed to the facility via storm sewer. The storm sewer will be designed for the future parking lot and pool complex on separate plans. The extended detention facility will discharge via a 24" pipe into the existing stream and floodplain.

WATER QUALITY ANALYSIS

For water quality purposes, the Virginia Runoff Reduction Method (VRRM) was used to determine the reduction in runoff volume and the post development pollutant loading. The DEQ VRRM New Development Compliance Spreadsheet – Version 3.0 was used to calculate the pollutant loading results, treatment volumes, and adjusted CN values.

Post-development drainage areas are shown on sheet 4.

Post Development
Site Area = 13.41 AC, all 'C' soils

Conserved Open Space =	10.20 Ac
Managed Turf =	1.07 Ac
Impervious =	2.08 Ac
	13.35 AC

Total Load (TP) Reduction Required (lb/yr) = 0.50
Total Load (TP) Reduction Achieved (lb/yr) = 0.70

TP Load Reduction exceeds the required TP Load Reduction. As shown above, Conserved Open Space is proposed and shall be dedicated and recorded prior to Notice of Termination of the VPDES Construction General Permit.

WATER QUANTITY ANALYSIS

Sheets 6 and 7 provide pre- and post-development drainage areas and ground cover for quantity control purposes. Drainage to the pond area was compared Pre- and Post-Development. Pre-development, drainage from the site drains directly into the existing stream and floodplain area. Most of the Post-development drainage shall be routed through the Extended Detention Facility which will discharge into the steam and floodplain.

This existing stream drains into Jonas Run a short distance downstream of the subject property and comprises a "natural stormwater conveyance system." The 1-year, 24-hour storm peak flow rate from the site meets the Energy Balance Equation, as shown below, satisfying the requirements of 9VAC25-870-66 B.3 for channel protection.

Outlet protection will be provided at the detention pond outfall to prevent erosion as it enters the existing stream. The remaining onsite drainage will sheet-flow from the site into the adjacent stream.

1-YEAR STORM
Pre- and Post-development Runoff Depth (Q) and Peak Discharge (qp) were computed utilizing Hydraflow Hydrographs. The Energy Balance Equation was used to determine if runoff storage volume (in addition to the computed Tv) was required to achieve compliance with the channel protection regulations. Since nearly all the proposed disturbed area is channeled to the extended detention facility, the pre-development flow for this area was compared to the post-development discharge from the extended detention facility.

	DA (AC)	CN	P 1yr.	Rv 1 yr. In.	Rv 1 yr. Ac. Ft.	q_p 1yr.	
Pre - Dev	3.23	76	2.70	0.82	0.215	3.163	Hyd 1
Post - Dev	3.37	91	2.70	1.79	0.503	1.055	Hyd 5

P(1-yr.) taken from the Virginia Stomwater Management Handbook, table 11-B.1
Rv taken from the Virginia Stomwater Management Handbook, Tables 11-C
*Ac Ft = (Rv*DA)/12*
Post Dev CN: (3.01x92)+(.36x81)/3.37 = 91

CALCULATE ALLOWABLE DISCHARGE BY ENERGY BALANCE EQUATION:

The allowable release rate was calculated by the VSMH Energy Balance method. The improvement factor was only applied to the onsite area. The allowable release is as follows:

Qallowable ≤ [Q onsite pre x 0.8 (RVonsite pre/RVonsite post)]+Q offsite pre

Qallowable ≤ [3.163 x 0.8 *(0.82/1.79)] = 1.159 cfs

The post development runoff from the extended detention facility will be 1.055 cfs (Hydrograph 5), which will be less than the allowable.

10-YEAR STORM
For the 10-year Storm, Pre- and Post-Development peak discharge values are as follows:

Pre-development discharge = 10.33 (Hydrograph 1)
Post-development discharge = 19.93 (Hydrograph 5)

However, post-development runoff discharges directly to the Jonas Run streambed via the E.D. Facility outlet or via sheetflow from the pond bypass areas. Pre-development flows are contained within the Jonas Run stream banks (see Sheet 7A) and no localized flooding occurs. The Post-development increase will be easily contained within the Jonas Run channel, meeting the requirements of 9VAC25-870-66 C.2.a.

COMMONWEALTH OF VIRGINIA
MARVIN T. HINCHEY
LIC. NO. 017596
01-03-2024
PROFESSIONAL ENGINEER

No.	Date	Revision Notes	Appr.
3	1/3/2024	SDI comments	
2	1/3/2024	Release for Bid	
1	12/15/2023	Issue Notes	

Project Title: Culpeper County Community Pool Project
16388 Competition Drive
Culpeper, VA

Sheet Title: HYDROGRAPHS AND STORMWATER MANAGEMENT NARRATIVE

Scale

Sheet No.: C18 of 22

Design Firm: NORMAN SMITH ARCHITECTURE
1341 H Street, Washington, DC 20002-4906
3637 Slate Mills Road, Sperryville, VA 22740
T 202.462.3888 www.normansmitharchitecture.com

Civil Firm: HINCHEY & BANES, PLC
ENGINEERING AND LAND PLANNING
125 East Davis Street
Culpeper, Virginia 22701
Phone (540) 829-2220
FAX (540) 829-2239

Drawn By: JHP
Checked By: MT
Project #: 21703-culpeper
Drawing Date: 12/15/23
Drawing By: JHP
Checked By: MT
Project Manager: MT
PM Date: 12/15/23

DETENTION POND CONSTRUCTION

STEP 1: STABILIZE THE DRAINAGE AREA. FINAL GRADING AND CONSTRUCTION OF DETENTION POND COMPONENTS SHOULD ONLY BE CONSTRUCTED AFTER THE CONTRIBUTING DRAINAGE AREA TO THE POND IS STABILIZED.

STEP 2: ASSEMBLE CONSTRUCTION MATERIALS ON-SITE, MAKE SURE THEY MEET DESIGN SPECIFICATIONS, AND PREPARE ANY STAGING AREAS.

STEP 3: INSTALL E&S CONTROLS PRIOR TO CONSTRUCTION, INCLUDING ANY STORMWATER DIVERSION PRACTICES. ALL AREAS SURROUNDING THE POND THAT ARE GRADED OR DENUDED DURING CONSTRUCTION MUST BE PLANTED WITH TURF GRASS, NATIVE PLANTINGS, OR OTHER APPROVED METHODS OF SOIL STABILIZATION.

STEP 4: CLEAR AND STRIP THE PROJECT AREA TO THE DESIRED SUB-GRADE.

STEP 5: EXCAVATE THE CUTOFF TRENCH UNDER THE ENTIRE LENGTH OF THE DAM. MINIMUM DEPTH SHALL BE 4 FEET BELOW SUITABLE MATERIAL WITH A BOTTOM WIDTH OF 4 FEET AND MAXIMUM SIDE SLOPES OF 1:1.

STEP 6: THIS WILL BE A HOMOGENEOUS DAM WITH FILL MATERIAL FOR THE CORE TRENCH AND THE REMAINDER OF THE DAM MEETING THE SOIL CLASSIFICATION CRITERIA FOR SC, CL, ML, GC, AND SM SOILS. FILL SHALL BE PLACED IN HORIZONTAL LAYERS NO MORE THAN 8 INCHES THICK. MINIMUM COMPACTION OF FILL UNDER PIPE AND RELATED STRUCTURES SHALL BE 95% AND ALLOTHER FILL MAY BE 90% COMPACTION. HOWEVER, ADDITIONAL SETTLING ALLOWANCE (UP TO 10%) IS REQUIRED.

STEP 7: INSTALL THE BARRELL PIPE AND CONCRETE CRADLE.

STEP 8: INSTALL THE RISER AND CONSTRUCT THE EMBANKMENT.

STEP 9: EXCAVATE/GRADE UNTIL THE APPROPRIATE ELEVATION AND DESIRED CONTOURS ARE ACHIEVED FOR THE BOTTOM AND SIDE SLOPES OF THE DETENTION POND.

STEP 10: INSTALL GABION BASKETS TOP ELEVATION OF 494.00 TO CREATE FOREBAY. LOWER THE TOP 6" WITH WIDTH OF 6 FEET WHERE INDICATED ON THE PLAN TO PROVIDE OVERFLOW.

STEP 11: INSTALL OUTLET PROTECTION.

STEP 12: STABILIZE EXPOSED SOILS WITH TEMPORARY SEED MIXTURES APPROPRIATE FOR THE POND BUFFER. ALL AREAS ABOVE THE NORMAL POOL ELEVATION SHOULD BE PERMANENTLY STABILIZED BY HYDROSEEDING OR SEEDING OVER STRAW.

INSPECTION OF FACILITIES

Routine Inspections

The owner, or designated representative, will inspect the facilities after significant rain events or at least once monthly for the following:

1. General condition of the facility (vegetation, spillways, embankments, inlet and outlet structures)
2. Erosion of embankments, earthen spillways or inlet/outlet channels
3. Accumulated sediment, trash and/or debris

Routine maintenance and repairs will be performed as needed or as specified in "Maintenance of Facilities". The owner shall keep on-site, a written record of inspections, maintenance and repairs.

Annual Inspections

The owner, or designated representative, will inspect the facilities once annually and prepare an inspection report which will be kept on file at the site. The annual inspection report will include:

1. General condition of the facility (vegetation, spillways, embankments, inlet and outlet structures)
2. Erosion of embankments, earthen spillways or inlet/outlet channels
3. Accumulated sediment, trash and/or debris

Any damage or deficiencies will be noted and repairs made in a timely manner. The inspection report should include a description of any repairs made to the facility.

5-Year Inspections

In accordance with 9VAC25-870-114, the facilities shall be inspected once every five (5) years by the VSMP authority. Alternatively, the owner may, at his own expense, have the facilities inspected by a licensed professional engineer, architect, landscape architect or land surveyor. The five-year inspection report will include:

1. General condition of the facility
2. Vegetation management
3. Slope, Embankment and Outlet Stabilization
4. Debris and Litter Control
5. Control Structure condition and maintenance
6. Access and Area Maintenance
7. Sediment and Pollutant Removal
8. Component Repair and Replacement

Any damage or deficiencies will be noted and repairs made in a timely manner. Independent five-year inspection reports shall be submitted to the VSMP authority.

DETENTION POND MAINTENANCE

Mowing: All grasses shall be mowed at least twice each year. Cool season grasses such as tall fescue should be mowed in early summer after emergence of the heads and again in early fall to prevent seeds of annual weeds from maturing. Legumes such as Sericea Lespedeza and Crown Vetch can be mowed less frequently. Trees and shrubs should not be permitted to grow on the dam.

Replanting and Overseeding: If vegetation covers less than 40% of the soil surface, the application of lime, fertilizer and seed shall be in accordance with current recommendations for new seeding. If vegetation covers more than 40% but less than 70% of the soil surface, the application of lime, fertilizer and seeding shall be in accordance with current over seeding recommendations.

Removing Trash and Debris: Trash, litter and vegetation will be removed as needed to prevent obstruction to the flow of water and movement of trash and litter to downstream properties; to maintain the integrity of the structure; to provide an attractive appearance; and to minimize water pollution.

Remove Sediment: Measure sediment accumulation levels. Soil materials (including clay, silt, sand and gravel) will be removed and design capacity of the pond shall be restored when the detention pool or the BMP pool storage capacity has been reduced by 10%.

Sediment Disposal: Sediment disposal should be in accordance with current procedures for disposal of sediment. Where deemed necessary or desirable, sediment will be tested for appropriate pollutants prior to its disposal. Dredged material shall be placed downslope of the BMP and erosion and sediment control measures shall be put in place around the disposed sediment until it is stabilized.

Repairs: Repair slopes, and eroded areas promptly and in a workman-like manner. Trash racks, pipes, headwalls, etc. will be maintained, repaired, and/or replaced as needed to maintain the integrity of the structure. Exposed metal surfaces will be painted to minimize damage due to rust.

Maintenance Inspections: The owner or owner's representative shall inspect the stormwater management pond and outfall structure within 24 hours after each rainfall event of one inch or more. Appropriate action shall be taken to ensure necessary repairs are performed in a timely manner. Maintenance costs shall be borne solely by the owner(s).

Maintenance Records: The owner or owner's designee shall keep written records of all inspections. Copies of written records shall be provided to the VSMP authority upon request.

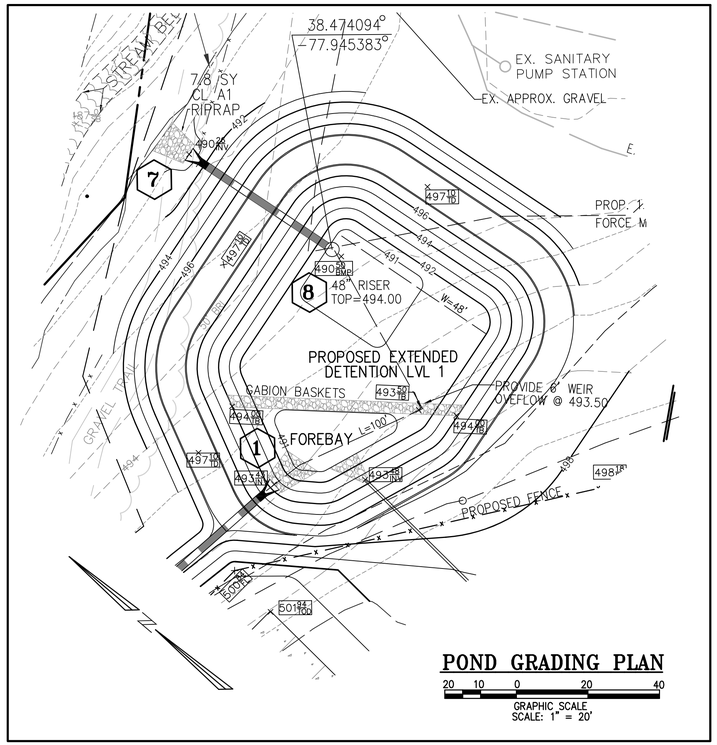

POND GRADING PLAN

20 10 0 20 40

GRAPHIC SCALE
SCALE: 1" = 20'

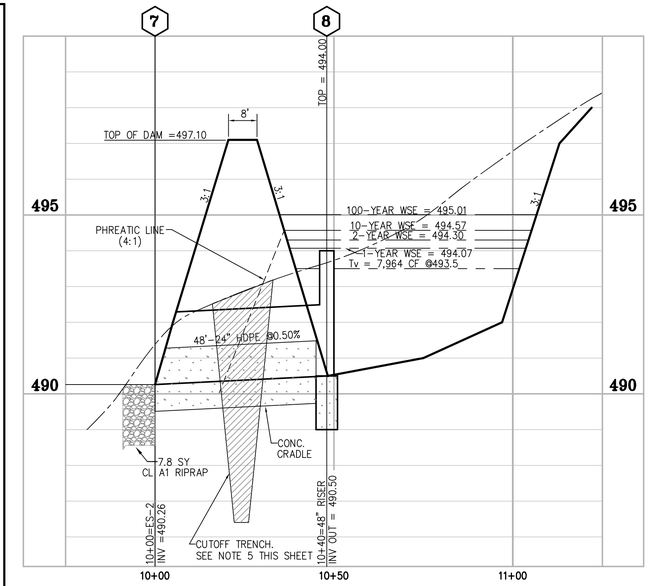

LEVEL 1 EXTENDED DETENTION POND DETAIL

HORIZONTAL SCALE: 1"=20' VERTICAL SCALE: 1"=2'

POND DESIGN NOTES

Tv REQ'D = 7475 cfs

VOLUME PROVIDED = 10,822 cfs @494.00

FOREBAY VOLUME REQ'D = 0.15x10,822 = 1623 cf

FOREBAY VOLUME SHOWN = 1,700 cf @ 493.50

DRAWDOWN = 26 HOURS (SEE COMPUTATIONS BELOW)

BUOYANCY CALCULATIONS

DETENTION POND RISER
VOLUME OF DISPLACEMENT
RISER: 3.14(2.5)²(3.5) = 68.72 cf
BASE: (8)(8)(1.5) = 96.0 cf
TOTAL VOLUME: 164.72 cf

BUOYANCY FORCE = 164.72 cf x 62.4 lbs/cf = 10,279 lbs
USE A SAFETY FACTOR OF 25% FOR A TOTAL OF 12,848 lbs

VOLUME OF CONCRETE
RISER: [3.14(2.5)²(3.5) - 3.14(2)²(3.5)] = 24.74 cf
BASE: (8)(8)(1.5) = 96 cf
TOTAL VOLUME: 120.74 cf

TOTAL WEIGHT = 120.74 cf x 150 lbs/cf = 18,111 lbs

THE TOTAL WEIGHT OF CONCRETE IS GREATER THAN THE BUOYANCE FORCE OF THE POND RISER

COMMONWEALTH OF VIRGINIA
MARVIN T. HINCHEY
LIC. NO. 017596
01-03-2024
PROFESSIONAL ENGINEER

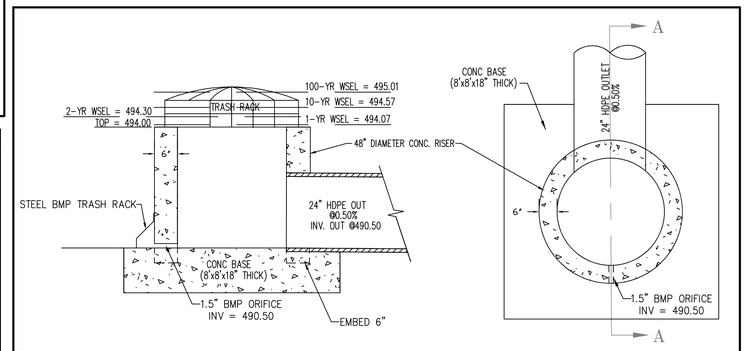

CROSS SECTION "A-A" PLAN VIEW

RISER DETAIL

N.T.S.

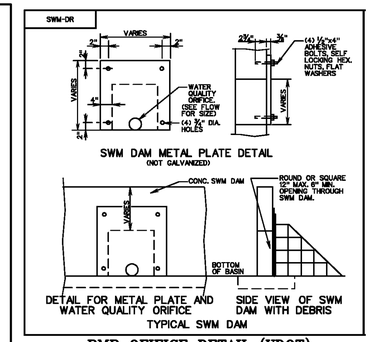

BMP OFIFICE DETAIL (VDOT)

N.T.S.

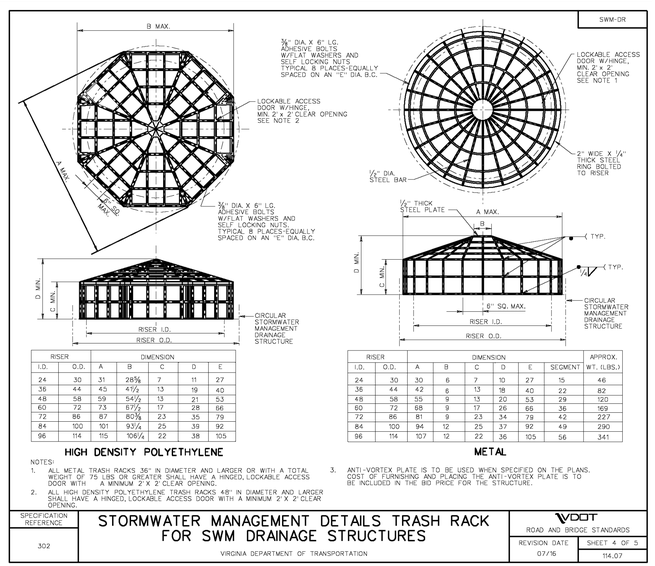

RISER I.D.	O.D.	A	B	C	D	E
24	30	31	28⅝	7	11	27
36	44	45	41½	13	19	40
48	58	59	54½	13	21	53
60	72	73	67½	17	28	66
72	86	87	80⅝	23	35	79
84	100	101	93¼	25	39	92
96	114	115	106¼	22	38	105

HIGH DENSITY POLYETHYLENE

RISER I.D.	O.D.	A	B	C	D	E	SEGMENT	APPROX. WT. (LBS.)
24	30	30	6	7	10	27	15	46
36	44	42	6	13	18	40	22	82
48	58	55	9	13	20	53	29	120
60	72	68	9	17	26	66	36	169
72	86	81	9	23	34	79	42	227
84	100	94	12	25	37	92	49	290
96	114	107	12	22	36	105	56	341

METAL

NOTES:
1. ALL METAL TRASH RACKS .36" IN DIAMETER AND LARGER OR WITH A TOTAL WEIGHT OF 75 LBS OR GREATER SHALL HAVE A HINGED, LOCKABLE ACCESS DOOR WITH A MINIMUM 2' X 2' CLEAR OPENING.
2. ALL HIGH DENSITY POLYETHYLENE TRASH RACKS 48" IN DIAMETER AND LARGER SHALL HAVE A HINGED, LOCKABLE ACCESS DOOR WITH A MINIMUM 2' X 2' CLEAR OPENING.
3. ANTI-VORTEX PLATE IS TO BE USED WHEN SPECIFIED ON THE PLANS. COST OF FURNISHING AND PLACING THE ANTI-VORTEX PLATE IS TO BE INCLUDED IN THE BID PRICE FOR THE STRUCTURE.

SPECIFICATION REFERENCE: 302

STORMWATER MANAGEMENT DETAILS TRASH RACK FOR SWM DRAINAGE STRUCTURES
VIRGINIA DEPARTMENT OF TRANSPORTATION

VDOT ROAD AND BRIDGE STANDARDS
REVISION DATE 07/16 | SHEET 4 OF 5 | 114.07

OUTLET PROTECTION CALCULATIONS

POND OUTLET (#7)
RIP-RAP TO BE VDOT ST'D EC-1 CL A1
WITH MINIMUM THICKNESS OF 1.8'
24" CMP, Q10=18.17, V10=6.01 fps
TW=1.84' > 0.5 Do
USE PLATE 3.18-4 FOR MAX. TW
La=9'
W=Do+La=3(2)+.4(9)=9.6'
d50= .9'

MAXIMUM TAIL WATER CONDITION
VESCH PLATE 3.18-4

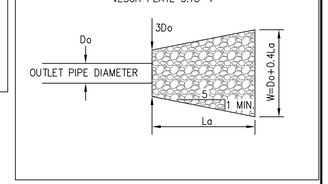

BMP CALCULATIONS CULPEPER SPORTS COMPLEX

BMP STORAGE REQUIREMENT

BMP STORAGE REQUIRED =	7,475	CF	
BMP STORAGE PROVIDED =	10,124	CF	494.00

BMP OUTLET DESIGN

ASSUME AVERAGE OUTFLOW AT AVERAGE BMP DEPTH

BMP W.S. ELEV. =	494.00		
BMP INVERT =	490.50		
ASSUMED ORIFICE RADIUS =	0.063 FT	1.5 in Dia. Orifice	
BMP DEPTH =	3.469 FT	(Ave. I.D. of 1 1/2" Sch 40 F	
AVERAGE BMP DEPTH =	1.734 FT		
AVERAGE 24 HOUR OUTFLOW (Q) =	0.117 CFS		
ORIFICE EQUATION =	Q = CA*SQRT(2GH)		
THEREFORE	A = (Q/(C*SQRT(2GH)))		
WHERE	Q = 0.117		
	C = 0.6		
	H = 3.47		
THEREFORE	A = 0.0131 S.F.		
	A = 3.14*R^2		
	R = SQRT(A/3.14)		
	R = 0.065 FT	0.77 IN.	
	D = 0.129 FT	1.55 IN.	
THEREFORE	D = 1.5 IN.	0.125 FT.	
	R = 0.75 IN.	0.063 FT.	
	A = 3.14*R^2		
	A = 0.0123 S.F.		
AVERAGE OUTFLOW	Q = 0.110 CFS		
AVERAGE DRAWDOWN TIME	T = 26 HOURS		

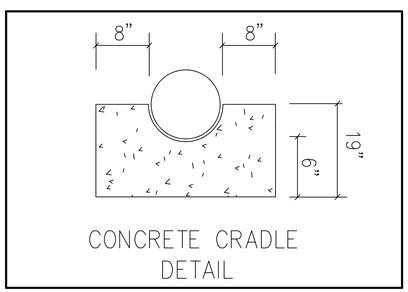

CONCRETE CRADLE DETAIL

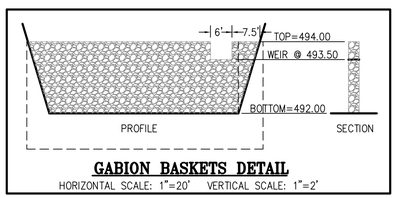

GABION BASKETS DETAIL

HORIZONTAL SCALE: 1"=20' VERTICAL SCALE: 1"=2'

No.	Date	Revision	Drawn by	Checked by	Approved by	Project Manager	Issued Date
3	1/2/2024	SDI comments	23703 culpeper				
2	1/12/2024	Release for Bid					
1	12/22/2023	Permit Set					

No.	Revision Notes	Date	Zone	Appr

Design firm: NORMAN SMITH ARCHITECTURE, 1341 H Street, Washington, DC 20002-4906, 3637 State Mills Road, Sperryville, VA 22740, T: 202.452.5886 www.normansmitharchitecture.com

Consultant: HINCHEY & BAINES PLC ENGINEERING AND PLANNING, 125 East Davis Street, Culpeper, Virginia 22701, Phone (540) 829-2220, FAX (540) 829-2229

Project Title: Culpeper County Community Pool Project, 16388 Competition Drive, Culpeper, VA

Sheet Title: STORMWATER MANAGEMENT DETAILS

Scale:

Sheet No. C19 of 22

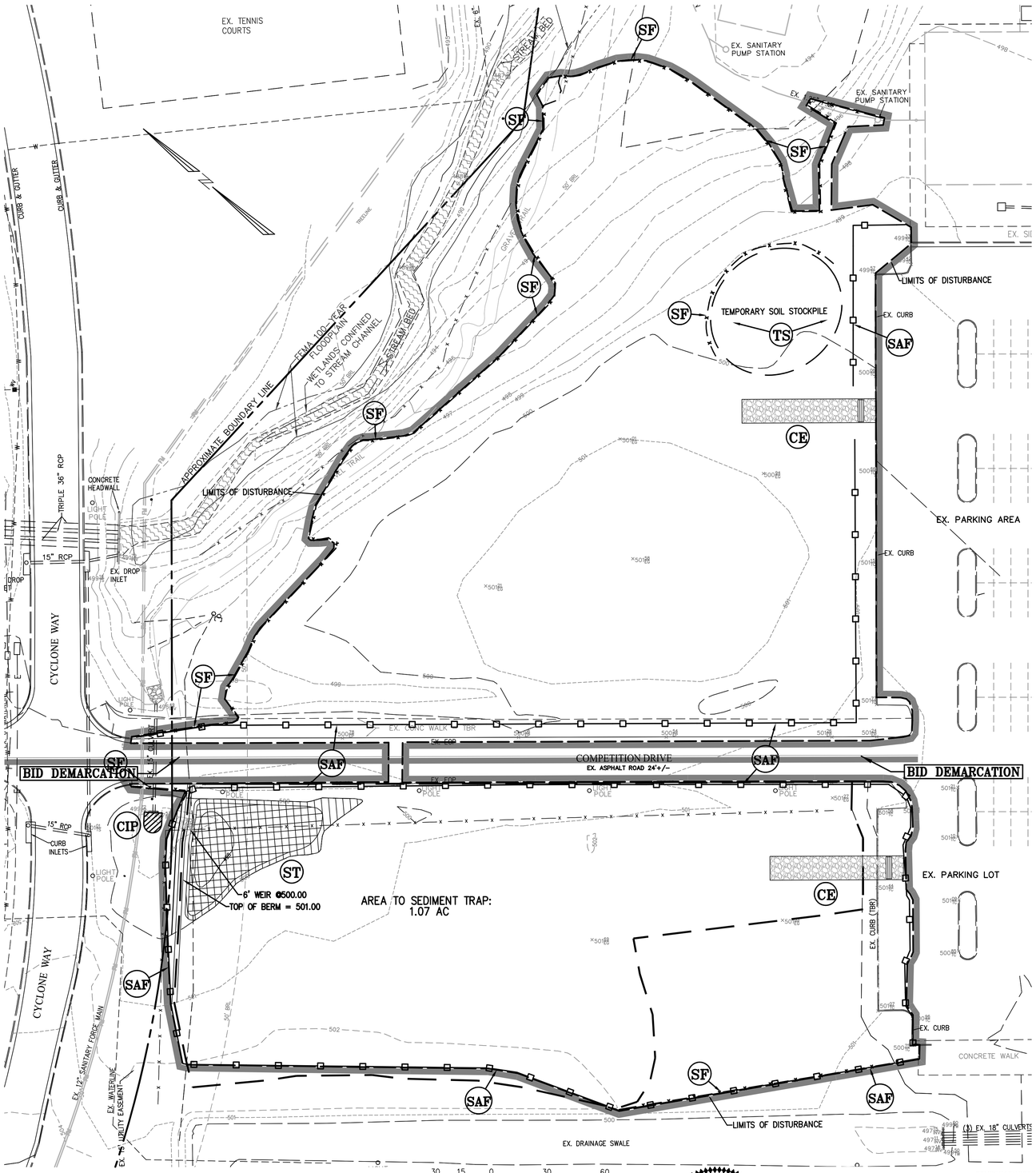

STONE CONSTRUCTION ENTRANCE (CE)

VESCH SPEC. 3.02-1

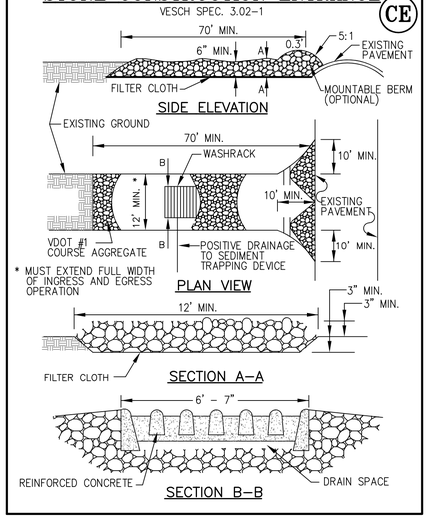

EROSION\SEDIMENT CONTROL LEGEND

- LIMITS OF CONSTRUCTION
- CE — TEMPORARY CONSTRUCTION ENTRANCE WITH WASH RACK, SPEC 3.02
- ST — TEMP. SEDIMENT TRAP, SPEC 3.13
- CIP — CULVERT INLET PROTECTION, SPEC 3.08
- SF — SILT FENCE, SPEC 3.05
- SILTATION DIVIDE
- DRY STORAGE
- WET STORAGE
- TS — TEMPORARY SEEDING, SPEC 3.31
- SAF — SAFETY FENCE, SPEC. 3.01

SILT FENCE CULVERT INLET PROTECTION

NO SCALE

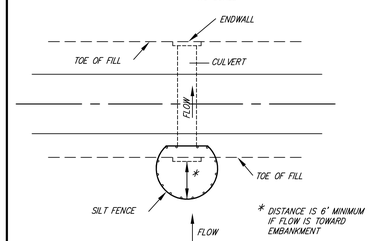

Plate 3.08-1

CONSTRUCTION OF A SILT FENCE (SF)

(WITHOUT WIRE SUPPORT)

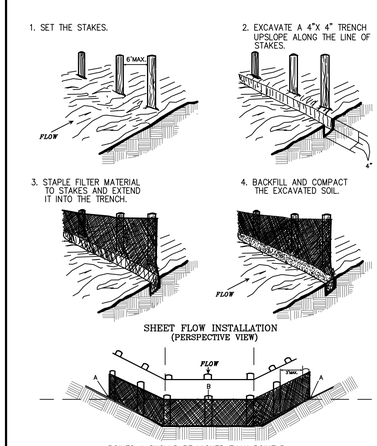

VESCH SPEC. 3.05

SAFETY FENCE

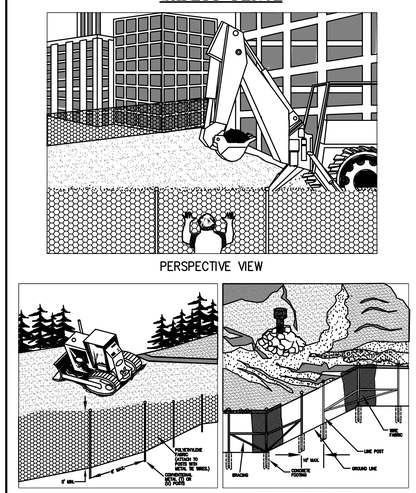

SOURCE: ADAPTED FROM CONWED PLASTICS AND VDOT ROAD AND BRIDGE STANDARDS

PLATE. 3.1-1

TEMPORARY SEDIMENT TRAP

VESCH SPEC. 3.13-2

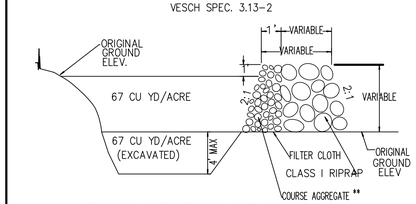

CROSS SECTION OF OUTLET

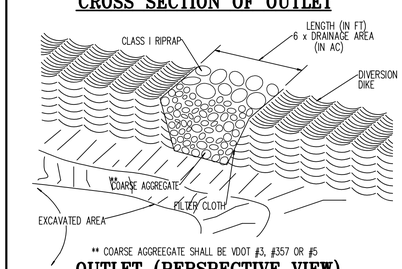

** COARSE AGGREEGATE SHALL BE VDOT #3, #357 OR #5

OUTLET (PERSPECTIVE VIEW)

COMMONWEALTH OF VIRGINIA
MARVIN T. HINCHEY
LIC. NO. 017596
01-03-2024
PROFESSIONAL ENGINEER

TEMPORARY SEDIMENT TRAP DESIGN SCHEDULE

(Imperial)

WEIR No.	DRAINAGE AREA (ac)	STORAGE REQUIRED WET (CY)	STORAGE REQUIRED DRY (CY)	STORAGE PROVIDED WET (CY)	STORAGE PROVIDED DRY (CY)	WET STORAGE DIMENSIONS (LXWXH) L= (ft)	W= (ft)	DEPTH+ (ft)	H HEIGHT OF BERM (ft)	Ho WEIR OUTLET HEIGHT (ft)	W: TOP WIDTH (ft)	L WEIR LENGTH (ft)	DRY STORAGE DIMENSIONS (LXWXH) L= (ft)	W= (ft)	DEPTH+ (ft)	AREA @ BERM OUTLET HEIGHT (sq ft)	ELEV. TOP OF WEIR (ft)	OUTLET ELEV. (ft)	ELEV. TOP OF BERM (ft)	BOTTOM ELEV. (ft)	C.O. ELEV.* (ft)
1	1.07	72	72	73	72	45.00' x	35.00' x	1.25'	1.75	1.25	2.5	6	68.00' x	38.00' x	0.75'	2584	500.00	499.25	501.00	498.00	498.63

Notes: Wet storage area to be excavated below grade.
*A stake must be placed in each sediment trap to indicate the cleanout elevation.

No.	Date	Revision Notes	Zone	Appr.

No.	Date	Issue Notes
	12/20/24	SUP comments
	12/20/23	Site Plan Review
	07/10/23	permit SUBM.

Client: Culpeper County
Project Title: Culpeper County Community Pool Project 16388 Competition Drive Culpeper, VA
Drawn File:
Drawn Date:
Drawn by:
Checked by:
Project #: 23703 culpeper
Drawing Code:
Cad File Name:
Approved By:
Plot Date:
Plot Scale:
Plotted by:
Scale:
Sheet No.: C20 of 22

Design Firm: NORMAN SMITH ARCHITECTURE
1341 H Street, Washington, DC 20002-4956
3637 Slate Mills Road, Sperryville, VA 22740
T 202.462.5886 www.normansmitharchitecture.com

Consultant: HINCHEY & BAINES PLC
ENGINEERING AND LAND PLANNING
1108 East Davis Street
Suite 201
Culpeper, Virginia 22701
T 540.829-2239
FAX (540) 829-2239

EROSION & SEDIMENT CONTROL PLAN PHASE 1

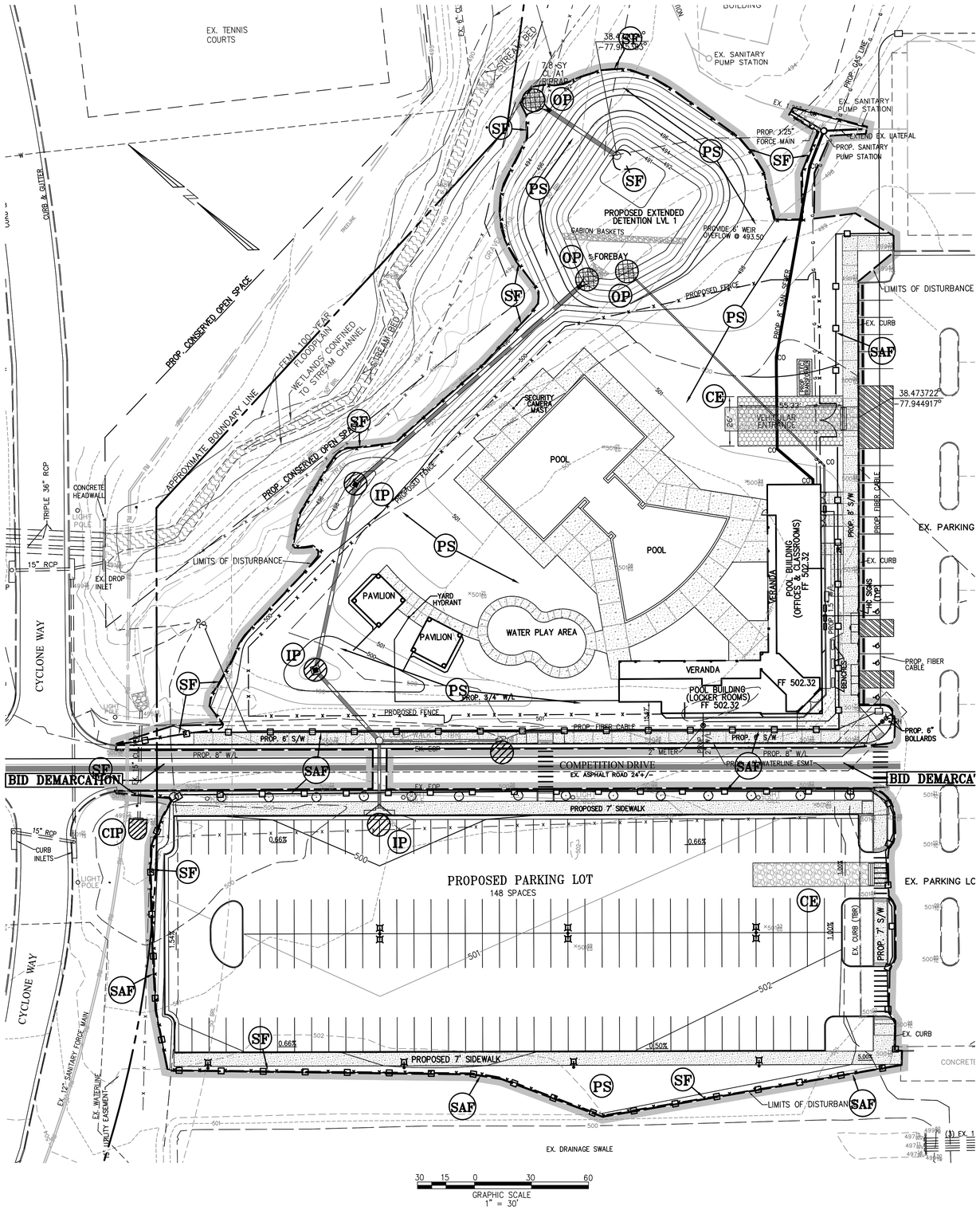

EROSION\SEDIMENT CONTROL LEGEND

	LIMITS OF CONSTRUCTION
CE	TEMPORARY CONSTRUCTION ENTRANCE WITH WASH RACK, SPEC 3.02
IP	INLET PROTECTION, SPEC 3.07
OP	OUTLET PROTECTION, SPEC 3.18
CIP	CULVERT INLET PROTECTION, SPEC 3.08
SF	SILT FENCE, SPEC 3.05
PS	PERMANENT SEEDING SPEC. 3.32 (TO BE MULCHED IN ACCORDANCE WITH VESCH SPECIFICATION 3.35)
SAF	SAFETY FENCE, SPEC. 3.01

COMMONWEALTH OF VIRGINIA
MARVIN T. HINCHEY
LIC. NO. 017596
01-03-2024
PROFESSIONAL ENGINEER

OUTLET PROTECTION CALCULATIONS

STORM SEWER OUTLET (#1)
RIP-RAP TO BE VDOT ST'D EC-1 CL A1
WITH MINIMUM THICKNESS OF 1.7'
24" RCP, Q10=11.49, V1=5.58 fps
TW=1.25' > 0.5 Do
USE PLATE 3.18-4 FOR MAX. TW
La=9'
W=3(Do)+.4(La)=9.6'
d50= MIN. 6"

POND OUTLET (#7)
RIP-RAP TO BE VDOT ST'D EC-1 CL A1
WITH MINIMUM THICKNESS OF 1.8'
24" CMP, Q10=18.17, V10=6.01 fps
TW=1.84' > 0.5 Do
USE PLATE 3.18-4 FOR MAX. TW
La=9'
W=Do+La=3(2)+.4(9)=9.6'
d50= .9'

ROOF DRAIN OUTLET
RIP-RAP TO BE VDOT ST'D EC-1 CL A1
WITH MINIMUM THICKNESS OF 1.7'
8" CMP, Q10=1.49, V10=6.63 fps
TW=0.25' < 0.5 Do
USE PLATE 3.18-3 FOR MIN. TW
La=6'
W=Do+La=6.67'
d50= MIN. 6"

MAXIMUM TAIL WATER CONDITION
VESCH PLATE 3.18-4

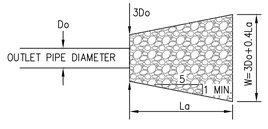

MINIMUM TAIL WATER CONDITION
VESCH PLATE 3.18-3

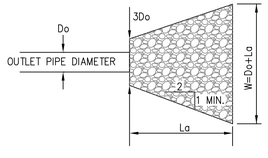

SILT FENCE DROP INLET PROTECTION

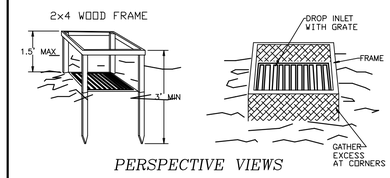

PERSPECTIVE VIEWS

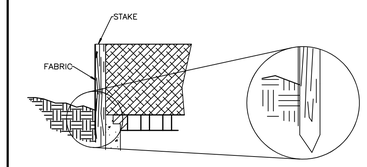

ELEVATION OF STAKE AND FABRIC ORIENTATION

DETAIL

BLOCK & GRAVEL CURB INLET SEDIMENT FILTER

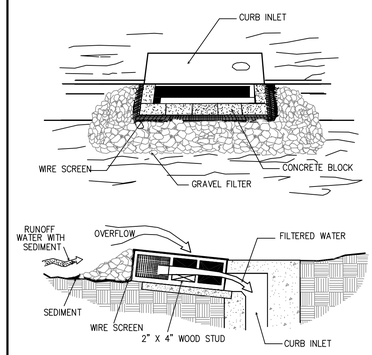

SPECIAL APPLICATION

THIS METHOD OF INLET PROTECTION IS APPLICABLE AT CURB INLETS WHERE AN OVERFLOW CAPABILITY IS NECESSARY TO PREVENT EXCESSIVE PONDING IN FRONT OF THE STRUCTURE.
* GRAVEL SHALL BE VDOT #3, #357 OR #5 COARSE AGGREGATE

PIPE OUTLET CONDITIONS (OP)

VESCH SPEC. 3.18-1

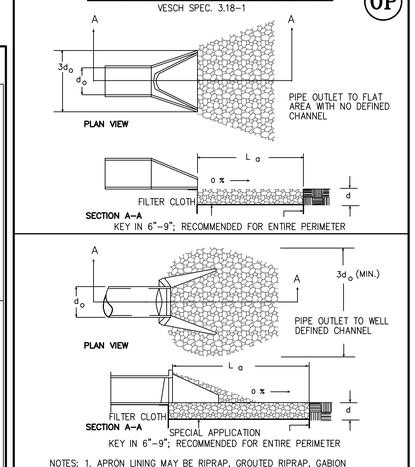

NOTES:
1. APRON LINING MAY BE RIPRAP, GROUTED RIPRAP, GABION BASKET, OR CONCRETE.
2. La IS THE LENGTH OF THE RIPRAP APRON AS CALCULATED USING PLATES 3.18-3 AND 3.18-4.
3. d = 1.5 TIMES THE MAXIMUM STONE DIAMETER, BUT NOT LESS THAN 6 INCHES.

No.	Date	Issue Notes	Revision Notes	Zone	Appr
3	1/5/2024	SDI comments			
2	12/12/2023	SDI comments			
1	12/7/2023	Permit Set			

Drawn by: 23703.culpeper
Checked By:
Date:
Revision:
Drawing Date:
CAD File Name:
Plot Date:
Designed By:
Reviewed By:
Approved By:
Field Manager:

Design firm: NORMAN SMITH ARCHITECTURE
1375 Sperryville Pike, P.O. Box 245
3637 State Mills Road, Sperryville, VA 22740
T 202.462.5886 www.normansmitharchitecture.com

Consultant: HINCHEY & BAINES PLC
ENGINEERING AND LAND PLANNING
125 East Davis Street
P.O. Box 1000
Culpeper, Virginia 22701
Phone (540) 829-2220
Fax (540) 829-2222

Project Title: Culpeper County
Community Food Project
16388 Competition Drive
Culpeper, VA

Sheet Title: EROSION & SEDIMENT CONTROL PLAN
PHASE 2

Scale:

Sheet No.: C21 of 22

9VAC25-840-40. MINIMUM STANDARDS

A VESCP MUST BE CONSISTENT WITH THE FOLLOWING CRITERIA, TECHNIQUES AND METHODS:
1. PERMANENT OR TEMPORARY SOIL STABILIZATION SHALL BE APPLIED TO DENUDED AREAS WITHIN SEVEN DAYS AFTER FINAL GRADE IS REACHED ON ANY PORTION OF THE SITE. TEMPORARY SOIL STABILIZATION SHALL BE APPLIED WITHIN SEVEN DAYS TO DENUDED AREAS THAT MAY NOT BE AT FINAL GRADE BUT WILL REMAIN DORMANT FOR LONGER THAN 14 DAYS. PERMANENT STABILIZATION SHALL BE APPLIED TO AREAS THAT ARE TO BE LEFT DORMANT FOR MORE THAN ONE YEAR.
2. DURING CONSTRUCTION OF THE PROJECT, SOIL STOCK PILES AND BORROW AREAS SHALL BE STABILIZED OR PROTECTED WITH SEDIMENT TRAPPING MEASURES. THE APPLICANT IS RESPONSIBLE FOR THE TEMPORARY PROTECTION AND PERMANENT STABILIZATION OF ALL SOIL STOCKPILES ON SITE AS WELL AS BORROW AREAS AND SOIL INTENTIONALLY TRANSPORTED FROM THE PROJECT SITE.
3. A PERMANENT VEGETATIVE COVER SHALL BE ESTABLISHED ON DENUDED AREAS NOT OTHERWISE PERMANENTLY STABILIZED. PERMANENT VEGETATION SHALL NOT BE CONSIDERED ESTABLISHED UNTIL A GROUND COVER IS ACHIEVED THAT IS UNIFORM, MATURE ENOUGH TO SURVIVE AND WILL INHIBIT EROSION.
4. SEDIMENT BASINS AND TRAPS, PERIMETER DIKES, SEDIMENT BARRIERS AND OTHER MEASURES INTENDED TO TRAP SEDIMENT SHALL BE CONSTRUCTED AS A FIRST STEP IN ANY LAND-DISTURBING ACTIVITY AND SHALL BE MADE FUNCTIONAL BEFORE UPSLOPE LAND DISTURBANCE TAKES PLACE.
5. STABILIZATION MEASURES SHALL BE APPLIED TO EARTHEN STRUCTURES SUCH AS DAMS, DIKES AND DIVERSIONS IMMEDIATELY AFTER INSTALLATION.
6. SEDIMENT TRAPS AND SEDIMENT BASINS SHALL BE DESIGNED AND CONSTRUCTED BASED UPON THE TOTAL DRAINAGE AREA TO BE SERVED BY THE TRAP OR BASIN.
   A. THE MINIMUM STORAGE CAPACITY OF A SEDIMENT TRAP SHALL BE 134 CUBIC YARDS PER ACRE OF DRAINAGE AREA AND THE TRAP SHALL ONLY CONTROL DRAINAGE AREAS LESS THAN THREE ACRES.
   B. SURFACE RUNOFF FROM DISTURBED AREAS THAT IS COMPRISED OF FLOW FROM DRAINAGE AREAS GREATER THAN OR EQUAL TO THREE ACRES SHALL BE CONTROLLED BY A SEDIMENT BASIN. THE MINIMUM STORAGE CAPACITY OF A SEDIMENT BASIN SHALL BE 134 CUBIC YARDS PER ACRE OF DRAINAGE AREA. THE OUTFALL SYSTEM SHALL, AT A MINIMUM, MAINTAIN THE STRUCTURAL INTEGRITY OF THE BASIN DURING A 25-YEAR STORM OF 24-HOUR DURATION. RUNOFF COEFFICIENTS USED IN RUNOFF CALCULATIONS SHALL CORRESPOND TO A BARE EARTH CONDITION OR THOSE CONDITIONS EXPECTED TO EXIST WHILE THE SEDIMENT BASIN IS UTILIZED.
7. CUT AND FILL SLOPES SHALL BE DESIGNED AND CONSTRUCTED IN A MANNER THAT WILL MINIMIZE EROSION. SLOPES THAT ARE FOUND TO BE ERODING EXCESSIVELY WITHIN ONE YEAR OF PERMANENT STABILIZATION SHALL BE PROVIDED WITH ADDITIONAL SLOPE STABILIZING MEASURES UNTIL THE PROBLEM IS CORRECTED.
8. CONCENTRATED RUNOFF SHALL NOT FLOW DOWN CUT OR FILL SLOPES UNLESS CONTAINED WITHIN AN ADEQUATE TEMPORARY OR PERMANENT CHANNEL, FLUME OR SLOPE DRAIN STRUCTURE.
9. WHENEVER WATER SEEPS FROM A SLOPE FACE, ADEQUATE DRAINAGE OR OTHER PROTECTION SHALL BE PROVIDED.
10. ALL STORM SEWER INLETS THAT ARE MADE OPERABLE DURING CONSTRUCTION SHALL BE PROTECTED SO THAT SEDIMENT-LADEN WATER CANNOT ENTER THE CONVEYANCE SYSTEM WITHOUT FIRST BEING FILTERED OR OTHERWISE TREATED TO REMOVE SEDIMENT.
11. BEFORE NEWLY CONSTRUCTED STORMWATER CONVEYANCE CHANNELS OR PIPES ARE MADE OPERATIONAL, ADEQUATE OUTLET PROTECTION AND ANY REQUIRED TEMPORARY OR PERMANENT CHANNEL LINING SHALL BE INSTALLED IN BOTH THE CONVEYANCE CHANNEL AND RECEIVING CHANNEL.
12. WHEN WORK IN A LIVE WATERCOURSE IS PERFORMED, PRECAUTIONS SHALL BE TAKEN TO MINIMIZE ENCROACHMENT, CONTROL SEDIMENT TRANSPORT AND STABILIZE THE WORK AREA TO THE GREATEST EXTENT POSSIBLE DURING CONSTRUCTION. NONERODIBLE MATERIAL SHALL BE USED FOR THE CONSTRUCTION OF CAUSEWAYS AND COFFERDAMS. EARTHEN FILL MAY BE USED FOR THESE STRUCTURES IF ARMORED BY NONERODIBLE COVER MATERIALS.
13. WHEN A LIVE WATERCOURSE MUST BE CROSSED BY CONSTRUCTION VEHICLES MORE THAN TWICE IN ANY SIX-MONTH PERIOD, A TEMPORARY VEHICULAR STREAM CROSSING CONSTRUCTED OF NONERODIBLE MATERIAL SHALL BE PROVIDED.
14. ALL APPLICABLE FEDERAL, STATE AND LOCAL REQUIREMENTS PERTAINING TO WORKING IN OR CROSSING LIVE WATERCOURSES SHALL BE MET.
15. THE BED AND BANKS OF A WATERCOURSE SHALL BE STABILIZED IMMEDIATELY AFTER WORK IN THE WATERCOURSE IS COMPLETED.
16. UNDERGROUND UTILITY LINES SHALL BE INSTALLED IN ACCORDANCE WITH THE FOLLOWING STANDARDS IN ADDITION TO OTHER APPLICABLE CRITERIA:
   A. NO MORE THAN 500 LINEAR FEET OF TRENCH MAY BE OPENED AT ONE TIME.
   B. EXCAVATED MATERIAL SHALL BE PLACED ON THE UPHILL SIDE OF TRENCHES.
   C. EFFLUENT FROM DEWATERING OPERATIONS SHALL BE FILTERED OR PASSED THROUGH AN APPROVED SEDIMENT TRAPPING DEVICE, OR BOTH, AND DISCHARGED IN A MANNER THAT DOES NOT ADVERSELY AFFECT FLOWING STREAMS OR OFF-SITE PROPERTY.
   D. MATERIAL USED FOR BACKFILLING TRENCHES SHALL BE PROPERLY COMPACTED IN ORDER TO MINIMIZE EROSION AND PROMOTE STABILIZATION.
   E. RESTABILIZATION SHALL BE ACCOMPLISHED IN ACCORDANCE WITH THIS CHAPTER.
   F. APPLICABLE SAFETY REQUIREMENTS SHALL BE COMPLIED WITH.
17. WHERE CONSTRUCTION VEHICLE ACCESS ROUTES INTERSECT PAVED OR PUBLIC ROADS, PROVISIONS SHALL BE MADE TO MINIMIZE THE TRANSPORT OF SEDIMENT BY VEHICULAR TRACKING ONTO THE PAVED SURFACE. WHERE SEDIMENT IS TRANSPORTED ONTO A PAVED OR PUBLIC ROAD SURFACE, THE ROAD SURFACE SHALL BE CLEANED THOROUGHLY AT THE END OF EACH DAY. SEDIMENT SHALL BE REMOVED FROM THE ROADS BY SHOVELING OR SWEEPING AND TRANSPORTED TO A SEDIMENT CONTROL DISPOSAL AREA. STREET WASHING SHALL BE ALLOWED ONLY AFTER SEDIMENT IS REMOVED IN THIS MANNER. THIS PROVISION SHALL APPLY TO INDIVIDUAL DEVELOPMENT LOTS AS WELL AS TO LARGER LAND-DISTURBING ACTIVITIES.
18. ALL TEMPORARY EROSION AND SEDIMENT CONTROL MEASURES SHALL BE REMOVED WITHIN 30 DAYS AFTER FINAL SITE STABILIZATION OR AFTER THE TEMPORARY MEASURES ARE NO LONGER NEEDED, UNLESS OTHERWISE AUTHORIZED BY THE VESCP AUTHORITY. TRAPPED SEDIMENT AND THE DISTURBED SOIL AREAS RESULTING FROM THE DISPOSITION OF TEMPORARY MEASURES SHALL BE PERMANENTLY STABILIZED TO PREVENT FURTHER EROSION AND SEDIMENTATION.
19. PROPERTIES AND WATERWAYS DOWNSTREAM FROM DEVELOPMENT SITES SHALL BE PROTECTED FROM SEDIMENT DEPOSITION, EROSION AND DAMAGE DUE TO INCREASES IN VOLUME, VELOCITY AND PEAK FLOW RATE OF STORMWATER RUNOFF FOR THE STATED FREQUENCY STORM OF 24-HOUR DURATION IN ACCORDANCE WITH THE FOLLOWING STANDARDS AND CRITERIA. STREAM RESTORATION AND RELOCATION PROJECTS THAT INCORPORATE NATURAL CHANNEL DESIGN CONCEPTS ARE NOT MAN-MADE CHANNELS AND SHALL BE EXEMPT FROM ANY FLOW RATE CAPACITY AND VELOCITY REQUIREMENTS FOR NATURAL OR MAN-MADE CHANNELS:
   A. CONCENTRATED STORMWATER RUNOFF LEAVING A DEVELOPMENT SITE SHALL BE DISCHARGED DIRECTLY INTO AN ADEQUATE NATURAL OR MAN-MADE RECEIVING CHANNEL, PIPE OR STORM SEWER SYSTEM. FOR THOSE SITES WHERE RUNOFF IS DISCHARGED INTO A PIPE OR PIPE SYSTEM, DOWNSTREAM STABILITY ANALYSES AT THE OUTFALL OF THE PIPE OR PIPE SYSTEM SHALL BE PERFORMED.
   B. ADEQUACY OF ALL CHANNELS AND PIPES SHALL BE VERIFIED IN THE FOLLOWING MANNER:
      (1) THE APPLICANT SHALL DEMONSTRATE THAT THE TOTAL DRAINAGE AREA TO THE POINT OF ANALYSIS WITHIN THE CHANNEL IS ONE HUNDRED TIMES GREATER THAN THE CONTRIBUTING DRAINAGE AREA OF THE PROJECT IN QUESTION; OR
      (2)(a) NATURAL CHANNELS SHALL BE ANALYZED BY THE USE OF A TWO-YEAR STORM TO VERIFY THAT STORMWATER WILL NOT OVERTOP CHANNEL BANKS NOR CAUSE EROSION OF CHANNEL BED OR BANKS.
      (b) ALL PREVIOUSLY CONSTRUCTED MAN-MADE CHANNELS SHALL BE ANALYZED BY THE USE OF A TEN-YEAR STORM TO VERIFY THAT STORMWATER WILL NOT OVERTOP ITS BANKS AND BY THE USE OF A TWO-YEAR STORM TO DEMONSTRATE THAT STORMWATER WILL NOT CAUSE EROSION OF CHANNEL BED OR BANKS; AND
      (c) PIPES AND STORM SEWER SYSTEMS SHALL BE ANALYZED BY THE USE OF A TEN-YEAR STORM TO VERIFY THAT STORMWATER WILL BE CONTAINED WITHIN THE PIPE OR SYSTEM.
   C. IF EXISTING NATURAL RECEIVING CHANNELS OR PREVIOUSLY CONSTRUCTED MAN-MADE CHANNELS OR PIPES ARE NOT ADEQUATE, THE APPLICANT SHALL:
      (1) IMPROVE THE CHANNELS TO A CONDITION WHERE A TEN-YEAR STORM WILL NOT OVERTOP THE BANKS AND A TWO-YEAR STORM WILL NOT CAUSE EROSION TO THE CHANNEL, THE BED, OR THE BANKS; OR
      (2) IMPROVE THE PIPE OR PIPE SYSTEM TO A CONDITION WHERE THE TEN-YEAR STORM IS CONTAINED WITHIN THE APPURTENANCES;
      (3) DEVELOP A SITE DESIGN THAT WILL NOT CAUSE THE PRE-DEVELOPMENT PEAK RUNOFF RATE FROM A TWO-YEAR STORM TO INCREASE WHEN RUNOFF OUTFALLS INTO A NATURAL CHANNEL OR WILL NOT CAUSE THE PRE DEVELOPMENT PEAK RUNOFF RATE FROM A TEN-YEAR STORM TO INCREASE WHEN RUNOFF OUTFALLS INTO A MAN-MADE CHANNEL; OR
      (4) PROVIDE A COMBINATION OF CHANNEL IMPROVEMENT, STORMWATER DETENTION OR OTHER MEASURES WHICH IS SATISFACTORY TO THE VESCP AUTHORITY TO PREVENT DOWNSTREAM EROSION.
   D. THE APPLICANT SHALL PROVIDE EVIDENCE OF PERMISSION TO MAKE THE IMPROVEMENTS.
   E. ALL HYDROLOGIC ANALYSES SHALL BE BASED ON THE EXISTING WATERSHED CHARACTERISTICS AND THE ULTIMATE DEVELOPMENT CONDITION OF THE SUBJECT PROJECT.
   F. IF THE APPLICANT CHOOSES AN OPTION THAT INCLUDES STORMWATER DETENTION, HE SHALL OBTAIN APPROVAL FROM THE VESCP OF A PLAN FOR MAINTENANCE OF THE DETENTION FACILITIES. THE PLAN SHALL SET FORTH THE MAINTENANCE REQUIREMENTS OF THE FACILITY AND THE PERSON RESPONSIBLE FOR PERFORMING THE MAINTENANCE.
   G. OUTFALL FROM A DETENTION FACILITY SHALL BE DISCHARGED TO A RECEIVING CHANNEL, AND ENERGY DISSIPATERS SHALL BE PLACED AT THE OUTFALL OF ALL DETENTION FACILITIES AS NECESSARY TO PROVIDE A STABILIZED TRANSITION FROM THE FACILITY TO THE RECEIVING CHANNEL.
   H. ALL ON-SITE CHANNELS MUST BE VERIFIED TO BE ADEQUATE.
   I. INCREASED VOLUMES OF SHEET FLOWS THAT MAY CAUSE EROSION OR SEDIMENTATION ON ADJACENT PROPERTY SHALL BE DIVERTED TO A STABLE OUTLET, ADEQUATE CHANNEL, PIPE OR PIPE SYSTEM, OR TO A DETENTION FACILITY.
   J. IN APPLYING THESE STORMWATER MANAGEMENT CRITERIA, INDIVIDUAL LOTS OR PARCELS IN A RESIDENTIAL, COMMERCIAL OR INDUSTRIAL DEVELOPMENT SHALL NOT BE CONSIDERED TO BE SEPARATE DEVELOPMENT PROJECTS. INSTEAD, THE DEVELOPMENT, AS A WHOLE, SHALL BE CONSIDERED TO BE A SINGLE DEVELOPMENT PROJECT. HYDROLOGIC PARAMETERS THAT REFLECT THE ULTIMATE DEVELOPMENT CONDITION SHALL BE USED IN ALL ENGINEERING CALCULATIONS.
   K. ALL MEASURES USED TO PROTECT PROPERTIES AND WATERWAYS SHALL BE EMPLOYED IN A MANNER WHICH MINIMIZES IMPACTS ON THE PHYSICAL, CHEMICAL AND BIOLOGICAL INTEGRITY OF RIVERS, STREAMS AND OTHER WATERS OF THE STATE.
   L. ANY PLAN APPROVED PRIOR TO JULY 1, 2014, THAT PROVIDES FOR STORMWATER MANAGEMENT THAT ADDRESSES ANY FLOW RATE CAPACITY AND VELOCITY REQUIREMENTS FOR NATURAL OR MAN-MADE CHANNELS IF SHALL SATISFY THE FLOW RATE CAPACITY AND VELOCITY REQUIREMENTS FOR NATURAL OR MAN THE PRACTICES ARE DESIGNED TO (I) DETAIN THE WATER QUALITY VOLUME AND TO RELEASE IT OVER 48 HOURS; (II) DETAIN AND RELEASE OVER A 24-HOUR PERIOD THE EXPECTED RAINFALL RESULTING FROM THE ONE YEAR, 24 HOUR STORM; AND (III) REDUCE THE ALLOWABLE PEAK FLOW RATE RESULTING FROM THE 1.5, 2, AND 10 YEAR, 24 HOUR STORMS TO A LEVEL THAT IS LESS THAN OR EQUAL TO THE PEAK FLOW RATE FROM THE SITE ASSUMING IT WAS IN A GOOD FORESTED CONDITION, ACHIEVED THROUGH MULTIPLICATION OF THE FORESTED PEAK FLOW RATE BY A REDUCTION FACTOR THAT IS EQUAL TO THE RUNOFF VOLUME FROM THE SITE WHEN IT WAS IN A GOOD FORESTED CONDITION DIVIDED BY THE RUNOFF VOLUME FROM THE SITE IN ITS PROPOSED CONDITION, AND SHALL BE EXEMPT FROM ANY FLOW RATE CAPACITY AND VELOCITY REQUIREMENTS FOR NATURAL OR MAN-MADE CHANNELS AS DEFINED IN ANY REGULATIONS PROMULGATED PURSUANT TO § 62.1-44.15:54 OR 62.1-44.15:65 OF THE ACT.
   M. FOR PLANS APPROVED ON AND AFTER JULY 1, 2014, THE FLOW RATE CAPACITY AND VELOCITY REQUIREMENTS OF § 62.1-44.15:52 A OF THE ACT AND THIS SUBSECTION SHALL BE SATISFIED BY COMPLIANCE WITH WATER QUANTITY REQUIREMENTS IN THE STORMWATER MANAGEMENT ACT (§ 62.1-44.15:24 ET SEQ. OF THE CODE OF VIRGINIA) AND ATTENDANT REGULATIONS, UNLESS SUCH LAND DISTURBING ACTIVITIES ARE IN ACCORDANCE WITH 9VAC25-870-48 OF THE VIRGINIA STORMWATER MANAGEMENT PROGRAM (VSMP) PERMIT REGULATIONS.
   N. COMPLIANCE WITH THE WATER QUANTITY MINIMUM STANDARDS SET OUT IN 9VAC25-870-66 OF THE VIRGINIA STORMWATER MANAGEMENT PROGRAM (VSMP) REGULATIONS SHALL BE DEEMED TO SATISFY THE REQUIREMENTS OF SUBDIVISION 19 OF THIS SUBSECTION.

MAINTENANCE

1. SAFETY FENCE - 3.01
SAFETY FENCE SHALL BE CHECKED REGULARLY FOR WEATHER-RELATED OR OTHER DAMAGE. ANY NECECCARY REPAIRS MUST BE MADE IMMEDIATELY. CARE SHOULD BE TAKEN TO SECURE ALL ACCESS POINTS (GATES) AT THE END OF EACH WORKING DAY. ALL LOCKING DEVICES MUST BE REPAIRED OR REPLACED AS NECESSARY.

2. TEMPORARY CONSTRUCTION ENTRANCE - 3.02
THE ENTRANCE SHALL BE MAINTAINED IN A CONDITION WHICH WILL PREVENT TRACKING OR FLOW OF MUD ONTO PUBLIC RIGHTS-OF-WAY. THIS MAY REQUIRE PERIODIC TOP DRESSING WITH ADDITIONAL STONE OR THE WASHING AND REWORKING OF EXISTING STONE AS CONDITIONS DEMAND AND REPAIR AND/OR CLEANOUT OF ANY STRUCTURES USED TO TRAP SEDIMENT. ALL MATERIALS SPILLED, DROPPED, WASHED, OR TRACKED FROM VEHICLES ONTO ROADWAYS OR INTO STORM DRAINS MUST BE REMOVED IMMEDIATELY. THE USE OF WATER TRUCKS TO REMOVE MATERIALS DROPPED, WASHED, OR TRACKED ONTO ROADWAYS WILL NOT BE PERMITTED UNDER ANY CIRCUMSTANCES.

3. SILT FENCE - 3.05
SILT FENCES SHALL BE INSPECTED IMMEDIATELY AFTER EACH RAINFALL AND AT LEAST DAILY DURING PROLONGED RAINFALL. ANY REQUIRED REPAIRS SHALL BE MADE IMMEDIATELY. CLOSE ATTENTION SHALL BE PAID TO THE REPAIR OF DAMAGED SILT FENCE RESULTING FROM END RUNS AND UNDERCUTTING. SHOULD THE FABRIC ON A SILT FENCE DECOMPOSE OR BECOME INEFFECTIVE PRIOR TO THE END OF THE EXPECTED USABLE LIFE AND THE BARRIER STILL BE NECESSARY, THE FABRIC SHALL BE REPLACED PROMPTLY. SEDIMENT DEPOSITS SHOULD BE REMOVED AFTER EACH STORM EVENT. THEY MUST BE REMOVED WHEN DEPOSITS REACH APPROXIMATELY ONE-HALF THE HEIGHT OF THE BARRIER. ANY SEDIMENT DEPOSITS REMAINING IN PLACE AFTER THE SILT FENCE IS NO LONGER REQUIRED SHALL BE DRESSED TO CONFORM WITH THE EXISTING GRADE, PREPARED AND SEEDED.

4. CURB-INLET PROTECTION - 3.07
CURB INLET PROTECTION SHALL BE INSPECTED AFTER EACH RAIN AND REPAIRS MADE AS NEEDED. ACCUMULATED SEDIMENT SHALL BE REMOVED AND DEPOSITED IN A SUITABLE AREA AND IN SUCH A MANNER THAT IT WILL NOT ERODE. INLET PROTECTION SHALL BE REMOVED AND THE AREA STABILIZED WHEN THE REMAINING DRAINAGE AREA HAS BEEN PROPERLY STABILIZED.

5. CULVERT INLET PROTECTION - 3.08
THE STRUCTURE SHALL BE INSPECTED AFTER EACH RAIN AND REPAIRS MADE AS NEEDED. AGGREGATE SHALL BE REPLACED OR CLEANED WHEN INSPECTION REVEALS THAT CLOGGED VOIDS ARE CAUSING PONDING PROBLEMS WHICH INTERFERE WITH ON-SITE CONSTRUCTION. SEDIMENT SHALL BE REMOVED AND THE IMPOUNDMENT RESTORED TO ITS ORIGINAL DIMENSIONS WHEN SEDIMENT HAS ACCUMULATED TO ONE-HALF THE DESIGN DEPTH. REMOVED SEDIMENT SHALL BE DEPOSITED IN A SUITABLE AREA AND IN SUCH A MANNER THAT IT WILL NOT ERODE AND CAUSE SEDIMENTATION PROBLEMS. TEMPORARY STRUCTURES SHALL BE REMOVED WHEN THEY HAVE SERVED THEIR USEFUL PURPOSE, BUT NOT BEFORE THE UPSLOPE AREA HAS BEEN PERMANENTLY STABILIZED.

6. TEMPORARY SEDIMENT TRAP - 3.13
SEDIMENT SHALL BE REMOVED AND THE TRAP RESTORED TO ITS ORIGINAL DIMENSIONS WHEN THE SEDIMENT HAS ACCUMULATED TO ONE HALF THE DESIGN VOLUME OF THE WET STORAGE. SEDIMENT REMOVAL FROM THE BASIN SHALL BE DEPOSITED IN A SUITABLE AREA AND IN SUCH A MANNER THAT IT WILL NOT ERODE AND CAUSE SEDIMENTATION PROBLEMS. FILTER STONE SHALL BE REGULARLY CHECKED TO ENSURE THAT FILTRATION PERFORMANCE IS MAINTAINED. STONE CHOKED WITH SEDIMENT SHALL BE REMOVED AND CLEANED OR REPLACED. THE STRUCTURE SHOULD BE CHECKED REGULARLY TO ENSURE THAT IT IS STRUCTURALLY SOUND AND HAS NOT BEEN DAMAGED BY EROSION OR CONSTRUCTION EQUIPMENT. THE HEIGHT OF THE STONE OUTLET SHOULD BE CHECKED TO ENSURE THAT ITS CENTER IS AT LEAST 1 FOOT BELOW THE TOP OF THE EMBANKMENT.

7. PERMANENT SEEDING - 3.32
WHEN IT IS CLEAR THAT PLANTS HAVE NOT GERMINATED ON AN AREA OR HAVE DIED, THESE AREAS MUST BE RESEEDED IMMEDIATELY TO PREVENT EROSION DAMAGE. HOWEVER, IT IS EXTREMELY IMPORTANT TO DETERMINE FOR WHAT REASON GERMINATION DID NOT TAKE PLACE AND MAKE ANY CORRECTIVE ACTION NECESSARY PRIOR TO RESEEDING THE AREA.

TEMPORARY SEEDING REQUIREMENTS
VESCH - TABLE 3.31-B

50/50 MIX OF ANNUAL RYEGRASS AND CEREAL (WINTER) RYE
@ 50-100 LBS/ACRE (SEPT. 1 - FEB. 15)
OR
ANNUAL RYEGRASS
@ 60-100 LBS/ACRE (FEB. 15 - APR. 30)
OR
GERMAN MILLET
@ 50 LBS/ACRE (MAY 1 - AUG. 31)

FERTILIZER: 10/20/10 MIX @ 600 LBS/ACRE
LIME: AGRICULTURAL LIMESTONE @ 2 TONS/ACRE
STRAW MULCH: APPLIED @ 1.5-2.0 TONS/ACRE

PERMANENT SEEDING REQUIREMENTS
VESCH - TABLE 3.32-D

COMMERCIAL/RESIDENTIAL MIXTURE @ 175-200 LBS/ACRE
KENTUCKY 31 OR TURF TYPE TALL FESCUE (95-100%)
IMPROVED PERENNIAL RYEGRASS (0-5%)
KENTUCKY BLUEGRASS (0-5%)

FERTILIZER: 10/20/10 MIX @ 1,000 LBS/ACRE
LIME: AGRICULTURAL LIMESTONE @ 2 TONS/ACRE
STRAW MULCH: APPLIED @ 1.5-2.0 TONS/ACRE

TABLE 3.31-B

ACCEPTABLE TEMPORARY SEEDING PLANT MATERIALS

"QUICK REFERENCE FOR ALL REGIONS"

Planting Dates	Species	Rate (lbs./acre)
Sept. 1 - Feb. 15	50/50 Mix of Annual Ryegrass (Lolium multi-florum) & Cereal (Winter) Rye (Secale cereale)	50 - 100
Feb. 16 - Apr. 30	Annual Ryegrass (Lolium multi-florum)	60 - 100
May 1 - Aug 31	German Millet (Setaria italica)	50

TABLE 3.32-D

SITE SPECIFIC SEEDING MIXTURES FOR PIEDMONT AREA

	Total Lbs. Per Acre
Minimum Care Lawn	
- Commercial or Residential	175-200 lbs.
- Kentucky 31 or Turf-Type Tall Fescue	95-100%
- Improved Perennial Ryegrass	0-5%
- Kentucky Bluegrass	0-5%
High-Maintenance Lawn	200-250 lbs.
- Kentucky 31 or Turf-Type Tall Fescue	100%
General Slope (3:1 or less)	
- Kentucky 31 Fescue	128 lbs.
- Red Top Grass	2 lbs.
- Seasonal Nurse Crop *	20 lbs.
	150 lbs.
Low-Maintenance Slope (Steeper than 3:1)	
- Kentucky 31 Fescue	108 lbs.
- Red Top Grass	2 lbs.
- Seasonal Nurse Crop *	20 lbs.
- Crownvetch **	20 lbs.
	150 lbs.

* Use seasonal nurse crop in accordance with seeding dates as stated below:
February 16th through April ..... Annual Rye
May 1st through August 15th ..... Foxtail Millet
August 16th through October ..... Annual Rye
November through February 15th ..... Winter Rye

** Substitute Sericea lespedeza for Crownvetch east of Farmville, Va. (May through September use hulled Sericea, all other periods, use unhulled Sericea). If Flatpea is used in lieu of Crownvetch, increase rate to 30 lbs./acre. All legume seed must be properly inoculated. Weeping Lovegrass may be added to any slope or low-maintenance mix during warmer seeding periods; add 10-20 lbs./acre in mixes.

EROSION & SEDIMENT CONTROL NARRATIVE

PROJECT DESCRIPTION:
TOTAL SITE AREA: APPROXIMATELY 130.124 ACRES. APPROXIMATELY 3.30 ACRES WILL BE DISTURBED DURING CONSTRUCTION. THE PURPOSE OF THIS PROJECT IS THE CONSTRUCTION OF A PROPOSED POOL COMPLEX AND PARKING EXPANSION.

PROJECT LOCATION:
THE SITE IS LOCATED AT 'CYCLONE WAY' AND 'COMPETITION DRIVE' WITHIN THE CULPEPER COUNTY SPORTS COMPLEX ADJACENT TO EASTERN VIEW HIGH SCHOOL OFF GREEN'S CORNER ROAD (RT. 666) .

EXISTING SITE CONDITIONS:
THIS SITE IS CURRENTLY VACANT. THE AREA IS GENTLY SLOPING. SOILS DELINEATION LINES HAVE BEEN PROVIDED.

ADJACENT PROPERTY:
THE PROJECT AREA IS BOUNDED ON THE NORTHEAST BY CYCLONE WAY, TO THE NORTHWEST BY COMPETITION DRIVE, TO THE SOUTHEAST BY EXISTING PARKING AREAS AND TO THE SOUTHWEST BY A VACANT GRASSY AREA.

CRITICAL EROSION AREAS:
THE CRITICAL AREAS ON THIS SITE IS THE EXISTING STREAM ALONG THE NORTHERN EDGE OF THE PROPOSED POND. CARE SHOULD BE TAKEN TO KEEP SEDIMENTS FROM THIS AREA.

EROSION AND SEDIMENT CONTROL MEASURES:
ALL VEGETATIVE AND STRUCTURAL EROSION AND SEDIMENT CONTROL PRACTICES SHALL BE CONSTRUCTED AND MAINTAINED ACCORDING TO MINIMUM STANDARDS AND SPECIFICATIONS OF THE V.E.S.C.H. 3RD ED. 1992 AND SHALL BE ADHERED TO UNLESS OTHERWISE WAIVED OR APPROVED BY A VARIANCE.

PRIOR TO DEVELOPMENT, THE LIMITS OF CLEARING SHALL BE CLEARLY MARKED ON THE PROPERTY AND SUITABLE PROTECTIVE BARRIERS SHALL BE ERECTED 5 FEET OUTSIDE THE DRIP LINE OF ANY TREE OR STAND OF TREES TO BE PRESERVED WITHIN 100 FEET OF THE CONSTRUCTION FOOTPRINT. THE BARRIERS SHALL REMAIN ERECTED THROUGHOUT ALL PHASES OF CONSTRUCTION. THE STORAGE OF EQUIPMENT, MATERIALS, DEBRIS OR FILL SHALL NOT BE ALLOWED WITHIN THE AREA TO BE PROTECTED BY THE BARRIER.

THE E&S INSPECTOR HAS THE AUTHORITY TO ADD OR DELETE E&S CONTROLS AS NECESSARY IN THE FIELD AS SITE CONDITIONS CHANGE. A PRE-CONSTRUCTION MEETING IS REQUIRED WITH THE COUNTY ENVIRONMENTAL STAFF PRIOR TO THE INSTALLATION OF ANY EROSION AND SEDIMENT CONTROLS OR START OF ANY LAND DISTURBING ACTIVITY. IN ADDITION, NO SEDIMENT BASIN OR TRAP CAN BE REMOVED WITHOUT WRITTEN AUTHORIZATION.

TEMPORARY AND PERMANENT SOIL STABILIZATION:
ALL CUT AND FILL SLOPES ARE TO BE STABILIZED IMMEDIATELY UPON COMPLETION IN ACCORDANCE WITH MINIMUM STANDARD NO. 5. AREAS NOT TO BE PAVED SHALL RECEIVE PERMANENT SEEDING AND MULCHING IN ACCORDANCE WITH SPEC 3.32. DISTURBED AREAS THAT WILL NOT BE BROUGHT TO FINAL GRADE FOR A PERIOD OF MORE THAN 14 DAYS SHALL RECEIVE TEMPORARY SEEDING AND MULCHING IN ACCORDANCE WITH SPEC 3.31. SEE SEEDING REQUIREMENTS, THIS SHEET.

STRUCTURAL PRACTICES:
1. TEMPORARY CONSTRUCTION ENTRANCE - 3.02
TEMPORARY CONSTRUCTION ENTRANCES WITH WASH RACK SHALL BE INSTALLED AT THE SITE ACCESS POINTS. DURING MUDDY CONDITIONS, DRIVERS OF CONSTRUCTION VEHICLES WILL BE REQUIRED TO WASH THEIR WHEELS BEFORE ENTERING THE ADJACENT ROADWAY.
2. SILT FENCE BARRIER - 3.05
SILT FENCE SEDIMENT BARRIERS WILL BE INSTALLED DOWNSLOPE OF AREAS WITH MINIMAL GRADES AS INDICATED ON SHEETS 20 & 21 TO FILTER SEDIMENT-LADEN RUNOFF FROM SHEET FLOW.
3. SAFETY FENCE - 3.01
SAFETY FENCE SHALL BE PLACED AROUND THE SITE PERIMITER ADJACENT TO THE EXISTING PARKING AREAS AND SIDEWALKS TO PREVENT TRESSPASSING IN THE CONSTRUCTION AREA.
4. CULVERT INLET PROTECTION - 3.08
SILT-FENCE CULVERT INLET PROTECTION SHALL BE INSTALLED AT THE INLET OF THE EXISTING CULVERT BENEATH COMPETITION DRIVE TO PREVENT SEDIMENTS FROM ENTERING THIS CULVERT DURING CONSTRUCTION.
5. INLET PROTECTION - 3.07
CURB INLET PROTECTION SHALL BE PROVIDED AT THE PROPOSED CURB INLETS AND SILT-FENCE DROP INLET PROTECTION AT THE PROPOSED YARD INLETS TO PREVENT SEDIMENTS FROM ENTERING THE STORM SEWER SYSTEM.
6. OUTLET PROTECTION - 3.18
OULET PROTECTION SHALL BE PLACED AT THE STORM SEWER & POND OUTLETAS AS SHOWN ON SHEET 13.
7. TEMPORARY SILT TRAP - 3.13
A TEMPORARY SEDIMENT TRAP SHALL BE INSTALLED AS INDICATED ON SHEET 20 TO COLLECT SEDIMENTS FROM THE PROPOSED PARKING EXPANSION AREA DURING CONSTRUCTION.

VEGETATIVE PRACTICES:
1. TOP SOILING (STOCKPILE) - 3.30
TOPSOIL WILL BE STRIPPED FROM AREAS TO BE GRADED AND STOCKPILED FOR LATER USE. STOCKPILE LOCATIONS SHALL BE STABILIZED WITH TEMPORARY VEGETATION OR SEDIMENT TRAPPING MEASURES PRIOR TO LAND-DISTURBING ACTIVITIES, SUBMIT A SUPPLEMENTARY EROSION AND SEDIMENT PLAN TO THE OWNER COVERING THE STOCKPILE AREA WHICH MAY HAVE TO BE APPROVED BY THE PLAN AUTHORITY BEFORE ANY ACTIVITY COMMENCES. NO SOIL IS TO BE TAKEN OFFSITE.
2. TEMPORARY SEEDING - 3.31
ALL DENUDED AREAS WHICH WILL BE LEFT DORMANT FOR EXTENDED PERIODS OF TIME SHALL BE SEEDED WITH FAST GERMINATING TEMPORARY VEGETATION IMMEDIATELY FOLLOWING GRADING. SELECTION OF THE SEED MIXTURE WILL DEPEND ON THE TIME OF YEAR IT IS APPLIED.
3. PERMANENT SEEDING - 3.32
ALL DISTURBED AREAS WHERE PERMANENT, LONG-LIVED VEGETATIVE COVER IS NEEDED TO STABILIZE THE SOIL AND WHERE ROUGH-GRADED AREAS WHICH WILL NOT BE BROUGHT TO FINAL GRADE FOR A YEAR OR MORE SHALL BE SEEDED WITH PERMANENT VEGETATION. SELECTION OF THE SEED MIXTURE WILL DEPEND

PHASING:
1. CONSTRUCTION WILL BE SEQUENCED SO THAT GRADING OPERATIONS CAN BEGIN AND END AS QUICKLY AS POSSIBLE.
2. INSTALL TEMPORARY CONSTRUCTION ENTRANCE WITH WASH RACK AT ENTRANCE LOCATIONS OF CONSTRUCTION SITE AS SHOWN ON SHEETS 20 & 21. MUD AND DEBRIS SHALL BE WASHED FROM ALL CONSTRUCTION VEHICLES AND EQUIPMENT BEFORE LEAVING THE SITE. A WATER TANKER TRUCK SHALL BE USED IF PUBLIC WATER IS NOT AVAILABLE.
3. INSTALL PERIMETER SILT FENCING AND SAFETY FENCING AS SHOWN TO INCLUDE AS SHOWN ON SHEET 10.
4. INSTALL CULVERT INLET PROTECTION AT THE EXISTING CULVERT BENEATH COMPETITION DR

GENERAL STRUCTURAL NOTES

1. THE STRUCTURE HAS BEEN DESIGNED FOR THE FOLLOWING LOADS. UNDER NO CIRCUMSTANCES SHALL CONTRACTOR OR OWNER ENGAGE CONSTRUCTION PRACTICE OR BUILDING USE THAT WILL EXCEED THESE LOADS WITHOUT FIRST GAINING APPROVAL FROM THE ENGINEER.

2. DESIGN LOADS REFERENCE: ASCE STANDARD ANSI/ASCE 7-16 'MINIMUM DESIGN LOADS FOR BUILDINGS AND OTHER STRUCTURES' AND THE VIRGINIA STATEWIDE CONSTRUCTION CODES.

LIVE LOADS:	
ROOF LIVE LOAD:	20 PSF
GROUND SNOW LOAD:	25 PSF
MAX DRIFT LOAD:	55 PSF
DESIGN FLOOR LOAD:	100 PSF
DEAD LOADS	
ROOF DEAD LOAD:	15 PSF
FLOOR DEAD LOAD:	50 PSF
CMU WALLS:	150 LB/LF
MISC (CEILING WORK)	5 PSF

FOR DESIGN WIND LOADS ON FRAMES AND CLADDING, BASIC DESIGN WIND SPEED V = 115 MPH (69 MPH (3-SEC GUST)

EARTHQUAKE DESIGN DATA:
SEISMIC SITE CLASS: D
SITE COEFFICIENTS: Fa: 1.6 Fv: 2..4

OTHER LOADS TO BE REFLECTED IN THE STRUCTURAL DESIGN ARE INDICATED WITHIN THE DRAWINGS WHERE APPROPRIATE.

3. DETAILS DESIGNATED AS "TYPICAL" SHALL BE UNDERSTOOD TO APPLY AT ALL OCCURRENCES OF THE CONDITION INDICATED IN THE DETAIL TITLE, WHETHER THE DETAIL IS EXPLICITLY CALLED ON THE PLAN OR NOT, EXCEPT AT LOCATIONS WHERE SPECIAL SECTIONS OR DETAILS ARE REFERENCED ON THE PLAN(S). SPECIAL SECTIONS ARE REFERENCED WITH A SECTION NUMBER AND SHALL ONLY BE TAKEN TO APPLY WHERE INDICATED ON THE PLAN.

4. SCALES NOTED ON THE DRAWINGS ARE FOR GENERAL INFORMATION ONLY. NO DIMENSIONAL INFORMATION SHALL BE OBTAINED BY DIRECT SCALING OF THE DRAWINGS.

5. THE CONTRACTOR SHALL ESTABLISH THE METHODS, PROCEDURES AND SEQUENCES OF CONSTRUCTION SUBJECT TO COMPLIANCE WITH ALL PROJECT REQUIREMENTS. ALL NECESSARY PRECAUTIONS SHALL BE TAKEN TO MAINTAIN AND INSURE THE INTEGRITY OF THE STRUCTURE AT ALL STAGES OF CONSTRUCTION. CONTRACTOR SHALL BE RESPONSIBLE FOR COORDINATION OF ALL REQUIRED REVISIONS TO THE STRUCTURAL SYSTEM WHICH MAY RESULT FROM ACCEPTANCE OF CONTRACTOR PROPOSED ALTERNATIVES OR SUBSTITUTIONS.

6. THE STRUCTURAL DESIGN CONVEYED IN THESE DRAWINGS, IS BASED ON THE MOST CURRENT MECHANICAL UNIT WEIGHTS, LOCATIONS, AND DIMENSIONS AVAILABLE AT THE ISSUE DATE. CONTRACTOR SHALL BE RESPONSIBLE TO VERIFY MECHANICAL SYSTEM REQUIREMENTS, AND SHALL PROVIDE OPENINGS AND STRUCTURE WHERE NECESSARY TO ACCOMMODATE THE MECHANICAL SYSTEMS.

FOUNDATION:

1. THE DESIGN OF THE FOUNDATIONS AND SLABS-ON-GRADE IS BASED ON THE FOLLOWING CRITERIA ESTABLISHED IN THE GEOTECHNICAL REPORT BY UNDERHILL ENGINEERING DATED AUGUST 4, 2023. UNDERHILL ENGINEERING PROJECT NO. 23029:
   a. ALLOWABLE SOIL BEARING PRESSURE = 2000 PSF
   b. FROST DEPTH= 24"
   c. SUBRADE MODULUS=100 PCI

2. AFTER EXCAVATION, IF THE CONDITION OF THE SOILS DO NOT MEET THE RECOMMENDED DESIGN CRITERIA STATED IN THE GEOTECHNICAL REPORT, NOTIFY THE ARCHITECT AND STRUCTURAL ENGINEER OF RECORD SO THAT THE FOUNDATIONS MAY BE REDESIGNED IF NECESSARY.

3. THE GEOTECHNICAL ENGINEER MUST VERIFY THE CONDITION AND/OR ADEQUACY OF ALL SUB-GRADES, FILLS AND BACKFILLS PRIOR TO THE PLACEMENT OF FOUNDATIONS, FOOTINGS, SLABS, WALLS, ETC.

4. AN ASSUMED SOIL DENSITY OF 120 PCF WAS USED, NOTIFY THE ARCHITECT AND STRUCTURAL ENGINEER OF RECORD IF SITE CONDITIONS DIFFER.

5. COORDINATE TOP OF FOOTING ELEVATIONS WITH THE REQUIREMENTS OF OTHER TRADES (PLUMBING, ELECTRICAL, ETC.).

6. BACK FILLING WALLS:
   a. DEPOSIT BACKFILL AGAINST WALLS EVENLY AGAINST BOTH SIDES OF WALL UNTIL THE LOWER FINAL GRADE IS REACHED.
   b. DO NOT PLACE BACKFILL AGAINST WALLS DEPENDENT UPON TOP AND BOTTOM CONCRETE SLABS FOR SUPPORT UNTIL THE CONCRETE SLABS HAVE ATTAINED 65% OF THEIR DESIGN 28 DAY COMPRESSION STRENGTH.
   c. SHORE AND BRACE WALLS SHOWN MONOLITHIC WITH A SLAB-ON-GRADE AT THE TOP OF THE WALL DURING BACKFILLING OPERATIONS.
   d. ANY BACKFILLING AGAINST POOL WALLS SHALL BE IN CONFORMANCE WITH POOL MANUFACTURER'S REQUIREMENTS

7. CONSTRUCT COLUMN FOOTINGS AND WALL FOOTINGS MONOLITHICALLY WITH TOPS OF ADJACENT FOOTINGS AT THE SAME ELEVATION.

8. FILLS:
   a. REMOVE ALL UNSUITABLE SOILS AND REPLACE WITH CLEAN STRUCTURAL FILL AT THE DIRECTION OF THE GEOTECHNICAL ENGINEER.
   b. PLACE FILL SOILS IN 6" MAXIMUM (LOOSE) LIFTS AT MOISTURE CONTENTS AS DESCRIBED IN THE GEOTECHNICAL REPORT.
   c. COMPACT ALL FILL WITHIN 10'-0" OF THE BUILDING LIMIT TO 95% STANDARD PROCTOR.
   d. TEST FIELD DENSITY AS DESCRIBED IN THE GEOTECHNICAL REPORT TO VERIFY ADEQUATE COMPACTION AND DESIGN BEARING PRESSURE.

9. SIDES OF FOUNDATIONS MUST BE FORMED UNLESS CONDITIONS PERMIT EARTH FORMING. FOUNDATIONS PLACED AGAINST THE EARTH REQUIRE THE FOLLOWING PRECAUTIONS: SLOPE SIDES OF EXCAVATIONS AS APPROVED BY THE GEOTECHNICAL ENGINEER AND CLEAN UP SLOUGHING BEFORE AND DURING CONCRETE PLACEMENT.

10. WHERE FOOTING STEPS ARE NECESSARY, SLOPE NO STEEPER THAN ONE VERTICAL TO TWO HORIZONTAL.

11. THE CONTRACTOR SHALL EXERCISE CARE DURING EXCAVATION FOR SHALLOW FOUNDATIONS SO THAT AS LITTLE DISTURBANCE AS POSSIBLE OCCURS AT THE FOUNDATION LEVEL. THE CONTRACTOR SHOULD CAREFULLY CLEAN LOOSE OR SOFT SOILS FROM THE BOTTOM OF THE EXCAVATION BEFORE PLACING CONCRETE. THE GEOTECHNICAL ENGINEER SHOULD OBSERVE ACTUAL FOUNDATION SUBGRADES DURING CONSTRUCTION TO EVALUATE WHETHER SUBGRADE SOILS MEET THE REQUIREMENTS AS RECOMMENDED IN THE GEOTECHNICAL REPORT.

FOUNDATION (CONT.):

12. CONTRACTOR SHALL PROVIDE FOUNDATION DRAINS. SEE DETAIL 15/S101 FOR REQUIREMENTS

CONCRETE :

1. ALL CONCRETE SHALL BE CONTROLLED CONCRETE, NORMAL WEIGHT WITH COMPRESSIVE STRENGTH OF 3,500 psi AT 28 DAYS UNO.

2. REINFORCING STEEL SHALL BE GRADE 60 MEETING ASTM A-615.

3. WELDED WIRE FABRIC (WWF) SHALL CONFORM TO ASTM -82 AND A-185, SIZE 6x6-W2.0xW2.0 UNO. LAP ALL EDGES 6", MIN.

4. FIBER REINFORCEMENT SHALL NOT BE USED IN SLABS ON GRADE.

5. ALL CONCRETE WORK SHALL CONFORM TO THE LATEST APPROVED EDITIONS OF THE APPLICABLE A.C.I. DOCUMENTS.

6. CALCIUM CHLORIDE SHALL NOT BE PERMITTED IN CONCRETE IN ANY FORM.

7. ALL CONCRETE EXPOSED TO WEATHER AND WITHIN 4'-0" OF FINISHED GRADE SHALL BE AIR ENTRAINED.

8. IT IS NOT PERMISSIBLE TO DELAY THE APPLICATION OF CURING COMPOUND UNTIL THE MORNING AFTER THE CONCRETE IS CAST.

9. FOR SLABS ON GRADE, PROVIDE CONTROL OR CONSTRUCTION JOINTS AS NOTED ON PLANS , U.N.O.

10. PROVIDE 3/4" CHAMFER ON ALL EXPOSED CONCRETE EDGES UNLESS OTHERWISE NOTED.

11. ALUMINUM CONDUITS ARE NOT PERMITTED IN CONCRETE SLABS.

12. PROVIDE 1 # 4x4'-0 DIAGONAL AT SLAB MID DEPTH AT ALL RE-ENTRANT CORNERS OF CONCRETE SLAB.

SLABS ON GRADE: (SOG)

1. SLABS ON GRADE SHALL BE CONSTRUCTED AS INDICATED IN THE TYPICAL SLAB DETAILS ON DRAWING S100. THE SLAB TYPE SHALL BE AS INDICATED ON THE FOUNDATION PLAN(S).

2. FLOOR SLABS SUBJECT TO PEDESTRIAN OR VEHICLE TRAFFIC SHALL BE FINISHED TO CLASS "A" TOLERANCE, HAVING A MAXIMUM AMPLITUDE OF 1/8 INCH IN 10 FEET, IN ANY DIRECTION. ALL FLOOR SLABS SHALL BE SCREEDED, FLOATED AND STEEL TROWELED TO A SMOOTH, DENSE AND PLANE SURFACE.

3. CONCRETE SLABS EXPOSED TO WEATHER SHALL HAVE 5% MIN ENTRAINED AIR. RAMPS, SLOPING SLABS, STEPS AND SLABS EXPOSED TO WEATHER SHALL RECEIVE A LIGHT BROOMED FINISH AS NOTED IN THE SCHEDULES..

4. ALL EXPOSED CONCRETE SLABS SHALL BE CURED WITH A SEALING AND CURING COMPOUND APPROVED BY THE ARCHITECT PRIOR TO USE, AND APPLIED IN STRICT ACCORDANCE WITH MANUFACTURER'S INSTRUCTIONS.

5. PROVIDE CONTROL JOINTS IN SLABS AT ALL COLUMN LINES OR WHERE INDICATED "CJ". PROVIDE 1/2" PREFORMED EXPANSION JOINT IN SLABS WHERE INDICATED "EJ". REFER TO TYPICAL SLAB JOINT DETAIL.

6. PRIOR TO POURING FLOOR SLABS, REFER TO ARCHITECTURAL, MECHANICAL, AND ELECTRICAL DWGS FOR ADDITIONAL WORK TO BE COMPLETED IN OR BELOW THE FLOOR, AND OTHER PROJECT REQUIREMENTS

7. VAPOR BARRIER SHALL BE 15-MIL STEGO® WRAP VAPOR BARRIER UNDER SLAB MEMBRANE OR EQUAL. THE VAPOR BARRIER SHALL HAVE A MAXIMUM WATER VAPOR PERMEANCE OF 0.0086 PERMS AND A PUNCTURE RESISTANCE OF 2266 GRAMS. OVERLAP ALL SEAMS A MINIMUM OF 6 INCHES AND TAPE USING STEGO® TAPE OR STEGO® CRETE CLAW® TAPE. ALL PENETRATIONS MUST BE SEALED USING A COMBINATION OF STEGO WRAP AND STEGO ACCESSORIES. REFER TO MANUFACTURER INSTALLATION INSTRUCTIONS FOR DETAILS.

8. THE FLOOR SLAB SHOULD BE SUPPORTED ON COMPETENT STRATA F, B, OR C MATERIAL AS EVALUATED BY THE GEOTECHNICAL ENGINEER, OR ON TYPE II COMPACTED STRUCTURAL FILL AS DESCRIBED IN SECTION 6.2.2. OF THE GEOTECHNICAL REPORT.

9. THE CONTRACTOR SHALL RECOMPACT FLOOR SLAB SUBGRADES IMMEDIATELY BEFORE PLACING MOISTURE BARRIER MATERIALS TO REPAIR ANY DISTURBANCE THAT MAY OCCUR DUE TO CONSTRUCTION.

10. UTILITY EXCAVATIONS SHOULD BE BACKFILLED WITH TYPE I OR TYPE II COMPACTED STRUCTURAL FILL.

11. A MINIMUM 4-INCH-THICK LAYER OF CRUSHED STONE OR WASHED GRAVEL CAPILLARY MOISTURE BARRIER SHOULD UNDERLY THE FLOOR SLABS ON GRADE. MOISTURE BARRIER MATERIAL SHOULD CONSIST OF VDOT NO. 57 SIZE AGGREGATE.

12. THE CONTRACTOR SHOULD COMPACT THE STONE IN PLACE BY MAKING AT LEAST TWO PASSES BY SUITABLE VIBRATORY COMPACTION EQUIPMENT.

13. STONE DEPTHS BENEATH SLABS EXCEEDING 2 FEET SHOULD BE OBSERVED BY THE ENGINEER, AS INDICATED BY CURRENT CODE CRITERIA.

14. WELDED-WIRE-REINFORCEMENT (WWR) (ASTM A1064), WHERE SPECIFIED AS REINFORCEMENT FOR SLAB-ON-GRADE CONCRETE, SHOULD BE PROVIDED IN SHEET FORM (I.E., NOT ROLLED) WITH APPROPRIATE LAP SPLICES (ACI 318-19 SECTION 25.5.3) AND PLACED ON STURDY CHAIRS AND/OR BOLSTERS TO MAINTAIN UNIFORM COVER FOLLOWING WIRE REINFORCEMENT INSTITUTE (WRI) 600 / TF 702-R-08 GUIDELINES (I.E., NOT PULLED UP, COMMONLY KNOWN AS "HOOKING").

15. CONTROL JOINTS, WHERE SPECIFIED, SHOULD NOT EXCEED A SPACING OF 15 FEET IN EACH DIRECTION AND ISOLATION BLOCK-OUTS SHOULD BE PROVIDED AT COLUMNS.

WOOD FRAMING:

1. IN ADDITION TO THE FOLLOWING SPECIFICATIONS, COMPLY WITH THE 2018 EDITION OF THE IBC, NDS AND THE VIRGINIA STATEWIDE BUILDING CODES FOR ALL WOOD FRAMING AND CONNECTIONS.

2. ALL WOOD SHALL BEAR A GRADE STAMP. ALL DIMENSIONED LUMBER SHALL HAVE THE FOLLOWING MINIMUM PROPERTIES UNO:

F_b -TENSION:	1,000 PSI
F_b - COMPRESSION:	1,000 PSI
F_c - PARALLEL	1,400 PSI
F_c - PERP:	565 PSI
F_v -	175 PSI
F_t -	575 PSI
E -	1,600 KSI

3. ALL LAMINATED VENEER LUMBER (LVL/PSL) BEAMS SHALL BE OF THE NOMINAL SIZES INDICATED, HAVING A MINIMUM ALLOWABLE BENDING STRESS OF 2600 PSI, AND SHALL BE MANUFACTURED AND ERECTED IN ACCORDANCE WITH ANSI/AITC A190.1-LATEST EDITION "STRUCTURAL GLUED LAMINATED TIMBER".

4. WOOD SILLS, SLEEPERS AND OTHER MEMBERS EXPOSED TO THE ELEMENTS OR IN CONTACT WITH THE FOUNDATION OR WITHIN 8" OF THE GROUND SHALL BE PRESSURE TREATED. SILLS AND SLEEPERS SHALL BE PROVIDED WITH AN APPROVED TERMITE BARRIER.

5. PLYWOOD ROOF SHEATHING SHALL BE ⅝" T&G PLYWOOD OR OSB WITH EXTERIOR GLUE RATING PANEL INDEX 32/16.

6. HEADERS OVER ALL OPENINGS SHALL BE FRAMED AS SHOWN ON PLANS.

7. HEADERS OVER OPENINGS WHICH EXCEED 6'-0" CLEAR WIDTH SHALL BE SUPPORTED BY DOUBLE JACK STUDS AT EACH END.

8. ALL JACKS, POSTS AND COLUMNS SHALL BE CUT TO EXACT DIMENSIONS REQUIRED.

9. PROVIDE METAL JOIST HANGER, STRAPS, TIES AND CONNECTORS AS REQUIRED TO ASSURE STRUCTURAL INTEGRITY OF FRAMED SYSTEM. PROVIDE HURRICANE TYPE TIE DOWN STRAPS TO SECURE ALL TRUSSES AND/OR RAFTERS TO WALL TOP PLATES.

10. SILL PLATE ANCHORS SHALL BE MINIMUM ½" A.B. SPACED 6'-0"o/c AND 12" FROM EACH WALL CORNER EACH WAY AND HAVE A MINIMUM DEPTH OF 12". FOR SHEAR WALLS SEE DETAILS SHEET S103

PRE-FABRICATED WOOD TRUSSES

1. ROOF TRUSSES SHALL BE DESIGNED AND FABRICATED BY A LICENSED TRUSS MANUFACTURER. TRUSS MANUFACTURER DRAWINGS ARE TO BE SEALED BY A LICENSED STRUCTURAL ENGINEER IN THE STATE OF THE PROJECT.

2. STRUCTURAL TRUSSES SHALL BE DESIGNED PER THE "STANDARD DESIGN SPECIFICATION FOR METAL PLATE CONNECTED WOOD TRUSSES", TPI LATEST EDITION, AS PREPARED PER THE TRUSS PLATE INSTITUTE, INC. THE WOOD TRUSSES SHALL BE CUSTOM DESIGNED TO FIT THE DIMENSIONS AND LOADS INDICATED ON THE PLANS. ALL DESIGNS TO BE IN ACCORDANCE WITH THE ALLOWABLE LOAD VALUES SHOWN ON THE PLANS. THE PREFABRICATED TRUSSES SHALL HAVE ERECTION BRACING, STRUT BRACING, AND BRIDGING AS REQUIRED BY THE MANUFACTURER TO RESIST ALL CONSTRUCTION AND BUILDING LOADS.

3. SHOP DRAWINGS INCLUDING DESIGN CALCULATIONS, MEMBER FORCES AND STRESS CONTROL POINTS SHALL BE SEALED BY A REGISTERED PROFESSIONAL ENGINEER AND SUBMITTED FOR APPROVAL.

4. PROVIDE LATERAL WOOD BRACING AND BRIDGING PER "TPI" RECOMMENDATIONS, IN NO CASE SHALL BRIDGING EXCEED 20 FEET 0 INCHES O/C.

5. ANCHOR THE TRUSSES TO BEARING PLATES WITH (2) TWO HURRICANE ANCHORS AND 10D NAILS AT EACH BEARING END OF TRUSS.

6. ALL WOOD TRUSSES SHALL BE DESIGNED FOR THE FOLLOWING MINIMUM UNIFORM LOADS UNLESS NOTED OTHERWISE ON THE TRUSS DIAGRAMS. USE 2018 VIRGINIA STATEWIDE BUILDING CODE WITH 90 MPH 3-SEC GUST ULTIMATE 115 MPH WIND VELOCITY.
   TC LL - 30 PSF
   BC LL - 20 PSF
   BC DL - SEE MECHANICAL PLANS FOR ADDED DEAD LOADS

7. CONNECTOR PLATE MATERIAL FABRICATED WOOD TRUSSES SHALL CONFORM TO ASTM A446, GRADE A, WITH THE FOLLOWING MINIMUM MECHANICAL REQUIREMENTS.

MINIMUM THICKNESS	20 GA
ALLOWABLE TENSILE STRESS	20,000 PSI
ALLOWABLE SHEAR STRESS	13,500 PSI
YIELD STRESS	36,000 PSI
ULTIMATE STRESS	48,000 PSI
ELONGATION IN 2 INCHES	20 % MINIMUM

8. CONNECTOR PLATE MATERIAL SHALL BE PRIMED AND HOT DIPPED GALVANIZED IN ACCORDANCE WITH THE REQUIREMENTS OF THE TRUSS PLATE INSTITUTE.

9. TRUSS CONNECTOR PLATES SHALL BE MECHANICALLY PRESSED IN SECURELY ON BOTH SIDES OF TRUSS JOINTS.

SHOP DRAWINGS:

1. CONTRACTOR SHALL SUBMIT SHOP DRAWINGS THAT ADEQUATELY DEPICT THE STRUCTURAL ELEMENTS AND CONNECTIONS SHOWN IN THE CONTRACT DOCUMENTS. STRUCTURAL DRAWINGS INDICATE TYP AND CERTAIN CONDITIONS ONLY. SHOP DRAWINGS SHALL DETAIL ALL CONDITIONS IN ACCORDANCE WITH SPECIFICATIONS, SPECIFIED STANDARDS AND SPECIFIC REQUIREMENTS OF THIS PROJECT.

2. REVIEW OF SUBMITTALS AND SHOP DRAWINGS BY THE ARCHITECT/ENGINEER DOES NOT RELIEVE THE CONTRACTOR OF FULL RESPONSIBILITY FOR COMPLIANCE WITH THE CONTRACT DOCUMENTS. CONTRACTOR REMAINS SOLELY RESPONSIBLE FOR ERRORS AND OMISSIONS ASSOCIATED WITH THE PREPARATIONS OF SHOP DRAWINGS AS THEY PERTAIN TO MEMBER SIZES, DETAILS AND DIMENSIONS SPECIFIED IN THE CONTRACT DOCUMENTS.

3. SHOP DRAWINGS WILL BE REVIEWED FOR GENERAL COMPLIANCE WITH THE DESIGN INTENT OF THE CONTRACT DOCUMENTS ONLY. CONTRACTOR IS RESPONSIBLE FOR VERIFICATION OF QUANTITIES, LENGTHS, ELEVATIONS, DIMENSIONS, ETC.

4. SHOP DRAWING SUBMITTALS SHALL BE SUBMITTED ELECTRONICALLY. SHOP DRAWINGS SHALL BE REVIEWED, STAMPED AND SIGNED BY THE CONTRACTOR PRIOR TO SUBMITTAL TO THE ARCHITECT/ENGINEER. DRAWINGS SUBMITTED WITHOUT REVIEW WILL BE RETURNED UNCHECKED.

5. MAXIMUM REQUIRED TURN AROUND TIME FOR SHOP DRAWING APPROVAL BY STRUCTURAL ENGINEER IS TEN (10) WORKING DAYS. TWENTY DAYS PRIOR PRIOR TO SUBMITTING SHOP DRAWINGS, THE CONTRACTOR SHALL SUBMIT SCHEDULE DETAILING SHOP DRAWING SUBMITTAL TYPES, DATES AND ESTIMATED QUANTITY. THE STRUCTURAL ENGINEER SHALL HAVE THE OPPORTUNITY TO REVIEW AND COMMENT ON THE PROPOSED SCHEDULE.

6. THE USE OR REPRODUCTIONS OF THESE CONTRACT DRAWINGS BY CONTRACTOR IN LIEU OF PREPARATION OF SHOP DRAWINGS SIGNIFIES HIS ACCEPTANCE OF ALL INFORMATION SHOWN AS CORRECT AND OBLIGATES HIMSELF TO ANY JOB EXPENSE, REAL OR IMPLIED, ARISING DUE TO ANY ERRORS THAT MAY OCCUR.

7. THE FOLLOWING SHOP DRAWINGS SHALL BE SUBMITTED PRIOR TO CONSTRUCTION:
   a. CONCRETE MIX DESIGN
   b. CONCRETE REINFORCING
   c. WOOD ROOF TRUSSES
   d. MASONRY REINFORCEMENT
   e. MASONRY
   f. VAPOR BARRIER
   g. MECHANICAL ANCHORS
   h. HANGERS

PERFORMANCE SPECIFIED ITEMS:

1. EMPLOY OR RETAIN A LICENSED PROFESSIONAL ENGINEER IN THE COMMONWEALTH OF VIRGINIA TO DESIGN THE FOLLOWING STRUCTURAL SYSTEMS AND COMPONENTS:
   a. TEMPORARY EXCAVATION SUPPORT
   b. UNDERPINNING
   c. PRE-ENGINEERED ROOF TRUSSES
   d. PRE-ENGINEERED CANOPIES
   e. STEEL STAIR AND HANDRAIL SYSTEMS
   f. MYRTHA POOL SYSTEM
   g. OTHER SYSTEMS NOT SHOWN IN THE STRUCTURAL DRAWINGS

2. THE COMPONENT ENGINEER IS RESPONSIBLE FOR CODE CONFORMANCE AND ENSURING DESIGN MEETS ALL REQUIREMENTS OF THE CONTRACT DOCUMENTS.

3. SHOP DRAWINGS AND CALCULATIONS SHALL BE SUBMITTED FOR ALL PERFORMANCE SPECIFIED ITEMS. SUBMITTALS SHALL CLEARLY IDENTIFY THE SPECIFIC PROJECT AND APPLICABLE CODES, LIST THE DESIGN CRITERIA, AND SHOW ALL DETAILS AND PLANS NECESSARY FOR PROPER FABRICATION AND INSTALLATION. CALCULATIONS AND SHOP DRAWINGS SHALL IDENTIFY SPECIFIC PRODUCT UTILIZED, GENERIC PRODUCTS WILL NOT BE ACCEPTED.

4. SHOP DRAWINGS AND CALCULATIONS REQUIRE THE SEAL, DATE AND SIGNATURE OF THE COMPONENT ENGINEER. STRUCTURAL ENGINEER OF RECORD WILL RETAIN ONE SIGNED AND SEALED PRINT FOR RECORD.

5. SHOP DRAWING SUBMITTALS FOR PERFORMANCE SPECIFIED COMPONENTS SHALL BE REVIEWED BY THE COMPONENT ENGINEER PRIOR TO SUBMITTAL. IF THE SHOP DRAWINGS ARE NOT SIGNED AND SEALED BY THE COMPONENT ENGINEER, THEN PROVIDE A SIGNED LETTER OR A NOTE ON SHOP DRAWING SUMBITTAL, WRITTEN AND SIGNED BY THE COMPONENT ENGINEER, INDICATING THAT THE SHOP DRAWINGS ARE IN CONFORMANCE WITH THE CALCULATIONS. ALL CALCULATIONS SHALL BE SIGNED AND SEALED BY COMPONENT ENGINEER, NO EXCEPTIONS WILL BE ALLOWED.

6. SUBMITTALS NOT MEETING THE CRITERIA LISTED IN THIS SECTION WILL BE REJECTED. DRH ENGINEERS, PLC WILL NOT BE RESPONSIBLE FOR DELAYS CAUSED BY REJECTED SUBMITTALS.

SPECIAL INSPECTIONS:

1. IN ACCORDANCE WITH THE BUILDING CODE, SECTION 1704, THE OWNER MAY RETAIN THE SERVICES OF "SPECIAL INSPECTOR(S)" TO PERFORM INSPECTIONS PURSUANT TO THE "STATEMENT OF SPECIAL INSPECTIONS' AND THE "SCHEDULE OF SPECIAL INSPECTIONS." THESE INSPECTIONS ARE IN ADDITION TO THE INSPECTIONS SPECIFIED IN SECTION 110 OF THE BUILDING CODE.

2. THE SPECIAL INSPECTOR SHALL BE QUALIFIED IN ACCORDANCE WITH THE BUILDING CODE.

3. THE CONTRACTOR SHALL COOPERATE WITH SPECIAL INSPECTOR(S) TO FACILITATE EXECUTION OF REQUIRED SERVICES. CONTRACTOR SHALL PROVIDE SPECIAL INSPECTOR(S) WITH CURRENT CONSTRUCTION SCHEDULE.

4. THE CONTRACTOR SHALL SUPPLY THE SPECIAL INSPECTOR WITH ALL CONTRACT DOCUMENTS, INCLUDING REVISIONS, AMENDMENTS, ETC.

5. THE CONTRACTOR SHALL SECURE AND DELIVER TO SPECIAL INSPECTORS ALL REQUIRED SUBMITTALS AND MATERIAL SAMPLES FOR TESTING.

6. THE CONTRACTOR SHALL PROVIDE SAFE ACCESS TO THE WORK TO BE INSPECTED BY THE SPECIAL INSPECTORS.

7. THE CONTRACTOR SHALL NOTIFY SPECIAL INSPECTOR SUFFICIENTLY IN ADVANCE OF OPERATIONS TO ALLOW FOR PERSONNEL ASSIGNMENT AND SCHEDULING BY SPECIAL INSPECTOR. WHEN TEST OR INSPECTION CAN NOT BE PERFORMED AFTER SUCH NOTICE (AND WITHOUT ADEQUATE CANCELLATION NOTICE), THE CONTRACTOR SHALL REIMBURSE OWNER THROUGH SPECIFICATION, DIVISION 1, PROCEDURES, FOR SPECIAL INSPECTOR'S COSTS AND EXPENSES. THE CONTRACTOR IS RESPONSIBLE FOR COSTS OF RE-TESTING (INSPECTIONS, TESTS, QUALITY ASSURANCE WORK, ETC.) WHERE RESULTS PROVE UNSATISFACTORY OR NONCOMPLIANT, REGARDLESS OF WHETHER ORIGINAL TEST WAS THE CONTRACTOR'S RESPONSIBILITY. COSTS OF RE-TESTING ARE THE RESPONSIBILITY OF THE CONTRACTOR.

8. THE SPECIAL INSPECTOR SHALL VERIFY THAT THE CONSTRUCTION FOLLOWS THE INTENT OF THE CONTRACT DOCUMENTS, APPLICABLE CODES AND THE PERMIT SUCH THAT THE PUBLIC SAFETY WILL BE PROVIDED TO OCCUPANTS OF THE STRUCTURE

9. THE SPECIAL INSPECTOR SHALL:
   a. REVIEW AND BE FAMILIAR WITH THE CONTRACT DOCUMENTS FOR ALL AREAS DEFINED IN THE"SCHEDULE OF SPECIAL INSPECTIONS."
   b. CONSULT WITH THE DESIGN PROFESSIONALS FOR CLARIFICATIONS CONCERNING QUESTIONS, PROBLEMS, ETC.
   c. ATTEND PRE-CONSTRUCTION AND ROUTINE JOB MEETINGS REQUIRED OF THE CONTRACTOR TO ASSURE THAT THE CONTRACTOR UNDERSTANDS THE CONTRACT DOCUMENTS.
   d. NOTIFY THE CONTRACTOR OF THEIR PRESENCE AND RESPONSIBILITIES AT THE JOB SITE.
   e. PROVIDE ADEQUATE OBSERVATIONS TO ASSURE THAT THE WORK BY THE CONTRACTOR IS IN COMPLIANCE WITH THE CONTRACT DOCUMENTS.
   f. PERFORM ALL WORK AS DEFINED IN THE "SCHEDULE OF SPECIAL INSPECTIONS", INCLUDING REVIEW OF APPLICABLE SUBMITTALS. PERFORM ALL SPECIAL INSPECTIONS INDICATED IN THE SPECIFICATIONS.
   g. REPORT NONCONFORMING ITEMS TO THE IMMEDIATE ATTENTION OF THE CONTRACTOR FOR CORRECTION
   h. PREPARE AND SUBMIT THE DAILY, INTERIM AND FINAL REPORT OF SPECIAL INSPECTIONS.
   i. REPORT ANY DAMAGING EVENTS AND OBSERVED NONCONFORMING CONDITIONS SUCH AS EXPOSED REINFORCEMENT, UNSPECIFIED FIELD ALTERATIONS TO STEEL, ETC. AND PREPARE AND SUBMIT A DISCREPANCY REPORT.
   j. INITIAL AND DATE THE "DATE COMPLETED" BOX IN THE SCHEDULE OF SPECIAL INSPECTIONS SERVICES AS THE INSPECTION AND TESTING ACTIVITIES ARE COMPLETED.

10. THE DISCREPANCY REPORT SHALL BE WRITTEN FOR EACH NONCONFORMING ITEM AND SHALL CONTAIN:
    a. DESCRIPTION AND EXACT LOCATION.
    b. REFERENCE TO APPLICABLE DRAWINGS AND SPECIFICATIONS.
    c. RESOLUTION OR CORRECTIVE ACTION TAKEN AND THE DATE.

11. THE DAILY AND INTERIM REPORT SHALL CONTAIN:
    a. DESCRIPTION OF THE SPECIAL INSPECTION AND TESTS MADE WITH LOCATION.
    b. INDICATION OF NONCONFORMING ITEMS AND THEIR RESOLUTION.
    c. LISTING OF UNRESOLVED ITEMS AND PARTIES NOTIFIED.
    d. ITEMIZATION OF ANY CHANGES AUTHORIZED BY THE DESIGN PROFESSIONAL

12. SPECIAL INSPECTION REPORTS AND A FINAL REPORT IN ACCORDANCE WITH THE BUILDING CODE SHALL BE AVAILABLE AT THE TIME THE BUILDING IS APPROVED FOR OCCUPANCY.

STRUCTURAL ABBREVIATIONS:

ABOVE	ABV
ABOVE FINISH FLOOR	AFF
ALTERNATE	ALT
ALUMINUM	ALUM
ANCHOR BOLT	AB
ANGLE	ANG
APPROXIMATE	APPROX
ARCHITECT	ARCH
AT	@
BEAM or BENCH MARK	BM
BEAM LENGTH	BL
BEARING	BRG
BELOW	BEL
BELOW FINISHED FLOOR	BFF
BITUMINOUS	BIT
BLOCK	BLK
BLOCKING	BLKG
BOARD	BD
BOTTOM	BOT
BOTTOM OF DECK	BOD
BUILDING	BLDG
BUILT UP ROOF	BUR
BULKHEAD	BLKHD
CEMENT	CEM
CENTER	CTR
CENTER LINE	CL
CHANNEL	CHAN
CLEAR	CLR
CLEAR SPAN	C.S.
COLUMN	COL
CONCRETE	CONC
CONSTRUCTION	CONSTR
CONTINUOUS or CONTINUE	CONT
CONTROL JOINT	CJ
CORNER GUARD	CG
COUNTER SINK	CS
COURSE	CRS
CUBIC	CU
CUBIC FEET	CU FT
CUBIC YARD	CU YD
CYLINDER	CYL
DEMOLITION or DEMOLISH	DEMO
DETAIL	DTL
DIAMETER	DIA OR Ø
DIMENSION	DIM
DOOR	DR
DOUBLE	DBL OR 2-PLY
DOWN	DN
DOWNSPOUT	DS
DRAWING	DRWG
EACH	EA
EACH FACE	EF
EACH WAY	EW
EAST	E
EQUAL	EQ
EQUIPMENT	EQUIP
EXISTING	EXIST
EXPANSION BOLT	EXP BT
EXPANSION JOINT	EJ
EXPOSED	EXP
EXTERIOR	EXT
FASTEN (ER)	FAS
FEET or FOOT	FT
FINISHED GRADE	FG
FIELD VERIFY	FV
FINISH	FIN
FINISH FLOOR	FF
FOOTING	FTG
FOUNDATION	FOUND
FULL SIZE	FS
GALVANIZED	GALV
GALVANIZED IRON	GI
GAUGE	GA
GRADE	GD
GYPSUM	GYP
HEADER	HDR
HEAVY DUTY	HD
HEIGHT	HT
HORIZONTAL	HORIZ
INCH	IN
INCLUDE	INCL
INSIDE DIAMETER	ID
INSULATION	INSUL
INTERMEDIATE	INTER
INTERIOR	INT
INVERT ELEVATION	IE
JOINT	JT
LINEAR FEET	LF
MASONRY	MAS
MASONRY OPENING	MO
MATERIAL	MTL
MAXIMUM	MAX
MECHANICAL	MECH
MEMBER	MER
METAL	MET
MISCELLANEOUS	MISC
NOMINAL	NOM
NORTH	N
NOT APPLICABLE	NA
NOT IN CONTRACT	NIC
NOT TO SCALE	NTS
NUMBER	NO or #
ON CENTER	OC
OPENING	OPNG
OPPOSITE	OPP
OUTSIDE DIAMETER	OD
OVERALL	OA
OVERHEAD	OH
PAIR	PR
POUNDS (WE

SCHEDULE OF SPECIAL INSPECTION SERVICES

PROJECT

MATERIAL / ACTIVITY	SERVICE	APPLICABLE TO THIS PROJECT Y/N	EXTENT	AGENT*	DATE COMPLETED
1704.2 Inspection of Fabricators					
Verify fabrication/quality control procedures.	In-plant review (3)	Y	Periodic	1	.
1705.1.1 Special Cases (work unusual in nature, including but not limited to alternative materials and systems, unusual design applications, materials and systems with special manufacturer's requirements	Submittal review, shop (3) and/or field inspection	N		.	.
1705.2 Steel Construction					
1. Fabricator and erector documents (Verify reports and certificates as listed in AISC 360, chapter N, paragraph 3.2 for compliance with construction documents)	Submittal Review	N	Each submittal	.	.
2. Material verification of structural steel	Shop (3) and field inspection	N	Periodic	.	.
3. Embedments (Verify diameter, grade, type, length, embedment. See 1705.3 for anchors)	Field inspection	N	Periodic	.	.
4. Verify member locations, braces, stiffeners, and application of joint details at each connection comply with construction documents	Field inspection	N	Periodic	.	.
5. Structural steel welding:					
a. Inspection tasks Prior to Welding (Observe, or perform for each welded joint or member, the QA tasks listed in AISC 360, Table N5.4-1)	Shop (3) and field inspection	N	Observe or perform as noted (4)	.	.
b. Inspection tasks During Welding (Observe, or perform for each welded joint or member, the QA tasks listed in AISC 360, Table N5.4-2)	Shop (3) and field inspection	N	Observe (4)	.	.
c. Inspection tasks After Welding (Observe, or perform for each welded joint or member, the QA tasks listed in AISC 360, Table N5.4-3)	Shop (3) and field inspection	N	Observe or perform as noted (4)	.	.
d. Nondestructive testing (NDT) of welded joints: see Commentary					
1) Complete penetration groove welds 5/16" or greater in risk category III or IV	Shop (3) or field Ultrasonic testing - 100%	N	Periodic	.	.
2) Complete penetration groove welds 5/16" or greater in risk category II	Shop (3) or field Ultrasonic testing - 10% of welds mimimum	N	Periodic	.	.
3) Thermally cut surfaces of access holes when material t > 2"	Shop (3) or field magnetic Partical or Penetrant testing	N	Periodic	.	.
4) Welded joints subject to fatigue when required by AISC 360, Appendix 3, Table A-3.1	Shop (3) or field radiographic or Ultrasonic testing	N	Periodic	.	.
5) Fabricator's NDT reports when fabricator performs NDT	Verify reports	N	Each Submittal (5)	.	.
6. Structural steel bolting:	Shop (3) and field inspection				
a. Inspection tasks Prior to Bolting (Observe, or perform for each bolted connection, in accordance with QA tasks listed in AISC 360, Table N5.6-1)		N	Observe or perform as noted (4)	.	.
b. Inspection tasks During Bolting (Observe the QA tasks listed in AISC 360, Table N5.6-2)		N	Observe (4)	.	.
1) Pre-tensioned and slip-critical joints		N			
a) Turn-of-nut with matching markings		N	Periodic	1	.
b) Direct tension indicator		N	Periodic	.	.
c) Twist-off type tension control bolt		N	Periodic	.	.
d) Turn-of-nut without matching markings		N	Continuous	.	.
e) Calibrated wrench		N	Continuous	.	.
2) Snug-tight joints		N	Periodic	.	.
c. Inspection tasks After Bolting (Perform tasks for each bolted connection in accordance with QA tasks listed in AISC 360, Table N5.6-3)		N	Perform (4)	.	.
7. Inspection of steel elements of composite construction prior to concrete placement in accordance with QA tasks listed in AISC 360, Table N6.1	Shop (3) and field inspection and testing	N	Observe or perform as noted (4)	.	.
1705.2.2 Steel Construction Other Than Structural Steel					
1. Material verification of cold-formed steel deck:					
a. Identification markings	Field inspection	N	Periodic	.	.
b. Manufacturer's certified test reports	Submittal review	N	Each Submittal	.	.
2. Connection of cold-formed steel deck to supporting structure:	Shop (3) and Field inspection				.
a. Welding		N	Periodic	.	.
b. Other fasteners (in accordance with AISC 360, Section N6)					.
1) Verify fasteners are in conformance with approved submittal		N	Periodic	.	.
2) Verify fasteners installation is in conformance with approved submittal and manufacturer's recommendations		N	Periodic	.	.
3. Reinforcing steel	Shop (3) and field inspection				
a. Verification of weldability of steel other than ASTM A706		N	Periodic	.	.
b. Reinforcing steel resisting flexural and axial forces in intermediate and special moment frames, boundary elements of special concrete structural walls and shear reinforcement		N	Continuous	.	.
c. Shear reinforcement		N	Continuous	.	.
d. Other reinforcing steel		N	Periodic	.	.
1705.3 Concrete Construction					
1. Inspection of reinforcing steel installment (see 1705.2.2 for welding)	Shop (3) and field inspection	Y	Periodic	1	.
2. Inspection of prestressing steel installation	Shop (3) and field inspection	N	Periodic	.	.
3. Inspection of anchors cast in concrete where allowable loads have been increased per section 1908.5 or where strength design is used	Shop (3) and field inspection	N	Periodic	.	.

SCHEDULE OF SPECIAL INSPECTION SERVICES

PROJECT

MATERIAL / ACTIVITY	SERVICE	APPLICABLE TO THIS PROJECT Y/N	EXTENT	AGENT*	DATE COMPLETED
4. Inspection of anchors and reinforcing steel post-installed in hardened concrete: Per research reports including verification of anchor type, anchor dimensions, hole dimensions, hole cleaning procedures, anchor spacing, edge distances,concrete embedment and tightening torque	Field inspection	Y	Periodic or as required by the research report issued by an approved source	1	.
5. Verify use of approved design mix	Shop (3) and field inspection	Y	Periodic	1	.
6. Fresh concrete sampling, perform slump and air content tests and determine temperature of concrete	Shop (3) and field inspection	Y	Continuous	1	.
7. Inspection for concrete and shotcrete placement for proper application techniques	Shop (3) and field inspection	N	Continuous	.	.
8. Inspection for maintenance of specified curing temperature and techniques	Shop (3) and field inspection	Y	Periodic	1	.
9. Inspection of prestressed concrete:	Shop (3) and field inspection	N			.
a. Application of prestressing force		N	Continuous	.	.
b. Grouting of bonded prestressing tendons in seismic-force-resisting system		N	Continuous	.	.
10. Erection of precast concrete members					
a. Inspect in accordance with construction documents	Field inspection	N	In Accordance with Construction Documents	.	.
b. Perform inspections of welding and bolting in accordance with Section 1705.2	Field inspection	N	In Accordance with Section 1705.2	.	.
11. Verification of in-situ concrete strength, prior to stressing of tendons in post tensioned concrete and prior to removal of shores and forms from beams and structural slabs	Review field testing and laboratory reports	N	Periodic	.	.
12. Inspection of formwork for shape, lines, location and dimensions	Field inspection	Y	Periodic	1	.
13. Concrete strength testing and verification of compliance with construction documents	Field testing and review of laboratory reports	Y	Periodic	1	.
1705.4 Masonry Construction					
(A) Level A, B and C Quality Assurance:					
1. Verify compliance with approved submittals	Field inspection	Y	Periodic	1	.
(B) Level B Quality Assurance:					
1. Verification of f'm and f'_{AAC} prior to construction	Testing by unit strength method or prism test method	N	Periodic	.	.
(C) Level C Quality Assurance:					
1. Verification of f'm and f'AAC prior to construction and for every 5,000 SF during construction	Testing by unit strength method or prism test method	N	Periodic	.	.
2. Verification of proportions of materials in premixed or preblended mortar, prestressing grout, and grout other than self-consolidating grout, as delivered to the project site	Field inspection	N	Continuous	.	.
3. Verify placement of masonry units	Field inspection	N	Periodic	-	.
(D) Levels B and C Quality Assurance:					
1. Verification of Slump Flow and Visual Stability Index (VSI) of self-consoldiating grout as delivered to the project	Field testing	N	Continuous	.	.
2. Verify compliance with approved submittals	Field inspection	N	Periodic	.	.
3. Verify proportions of site-mixed mortar, grout and prestressing grout for bonded tendons	Field inspection	N	Periodic	.	.
4. Verify grade, type, and size of reinforcement and anchor bolts, and prestressing tendons and anchorages	Field inspection	N	Periodic	.	.
5. Verify construction of mortar joints	Field inspection	N	Periodic	.	.
6. Verify placement of reinforcement, connectors, and prestressing tendons and anchorages	Field inspection	N	Level B - Periodic	.	.
		N	Level C - Continuous	.	.
7. Verify grout space prior to grouting	Field inspection	N	Level B - Periodic	.	.
		N	Level C - Continuous	.	.
8. Verify placement of grout and prestressing grout for bonded tendons	Field inspection	N	Continuous	.	.
9. Verify size and location of structural masonry elements	Field inspection	N	Periodic	.	.
10. Verify type, size, and location of anchors, including details of anchorage of masonry to structural members, frames, or other construction	Field inspection	N	Level B - Periodic	.	.
		N	Level C - Continuous	.	.
11. Verify welding of reinforcement (see 1705.2.2)	Field inspection		Continuous	.	.
12. Verify preparation, construction, and protestion of masonry during cold weather (temperature below 40°F) or hot weather (temperature above 90°F)	Field inspection	N	Periodic	.	.
13. Verify application and measurement of prestressing force	Field inspection	N	Continuous	.	.
14. Verify placement of AAC masonry units and construction of thin-bed mortar joints (first 5000 SF of AAC masonry)	Field inspection	N	Continuous	.	.
15. Verify placement of AAC masonry units and construction of thin-bed mortar joints (after the first 5000 SF of AAC masonry)	Field inspection	N	Level B - Periodic	.	.
		N	Level C - Continuous	.	.
16. Verify properties of thin-bed mortar for AAC masonry (first 5000 SF of AAC masonry)	Field inspection	N	Continuous	.	.
17. Verify properties of thin-bed mortar for AAC masonry (after the first 5000 SF of AAC masonry)	Field inspection	N	Level B - Periodic	.	.
		N	Level C - Continuous	.	.
18. Prepare grout and mortar specimens	Field testing	Y	Level B - Periodic	1	.
		N	Level C - Continuous	.	.
19. Observe preparation of prisms	Field inspection	Y	Level B - Periodic	1	.
		N	Level C - Continuous	.	.
1705.5 Wood Construction					
1. Inspection of the fabrication process of wood structural elements and assemblies in accordance with Section 1704.2.5	In-plat review (3)	N	Periodic	.	.
2. For high-load diaphragms, verify grade and thickness of structural panel sheathing agree with approved building plans	Field inspection	N	Periodic	.	.

SCHEDULE OF SPECIAL INSPECTION SERVICES

PROJECT

MATERIAL / ACTIVITY	SERVICE	APPLICABLE TO THIS PROJECT Y/N	EXTENT	AGENT*	DATE COMPLETED
3. For high-load diaphragms, verify nominal size of framing members at adjoining panel edges, nail or staple diameter and length, number of fastener lines, and that spacing between fasteners in each line and at edge margins agree with approved building plans	Field inspection	N	Periodic	.	.
4. Metal-plate-connected wood trusses spanning 60 feet or greater: verify temporary and permanent restraint/bracing are installed in accordance with the approved truss submittal package	Field inspection	N	Periodic	.	.
1705.6 Soils					
1. Verify materials below shallow foundations are adequate to achieve the design bearing capacity.	Field inspection	Y	Periodic	1	.
2. Verify excavations are extended to proper depth and have reached proper material.	Field inspection	Y	Periodic	1	.
3. Perform classification and testing of controlled fit materials.	Field inspection	Y	Periodic	1	.
4. Verify use of proper materials, densities, and lift thicknesses during placement and compaction of controlled fill	Field inspection	Y	Continuous	1	.
5. Prior to placement of controlled fill, observe subgrade and verify that site has been prepared properly	Field inspection	Y	Periodic	1	.
1705.7 Driven Deep Foundations					
1. Verify element materials, sizes and lengths comply with requirements	Field inspection	N	Continuous	.	.
2. Determine capacities of test elements and conduct additional load test, as required	Field inspection	N	Continuous		
3. Observe driving operations and maintain complete and accurate records for each element	Field inspection	N	Continuous		
4. Verify placement locations and plumbness, confirm type and size of hammer ,record number of blows per foot of penetration, determine required penetrations to achieve design capacity, record tip and butt elevations and document any damage to foundation element	Field inspection	N	Continuous	.	.
5. For steel elements, perform additional inspections per Section 1705.2	See Section 1705.2	N	See Section 1705.2	.	.
6. For concrete elements and concrete-filled elements, perform additional inspections per Section 1705.3	See Section 1705.3	N	See Section 1705.3	.	.
7. For specialty elements, perform additional inspections as determined by the registered design professional in responsible charge	Field inspection	N	In Accordance with Construction Documents	.	.
8. Perform additional inspections and tests in accordance with the construction documents	Field inspection and testing	N	In Accordance with Construction Documents	.	.
1705.8 Cast-in-Place Deep Foundations					
1. Observe drilling operations and maintain complete and accurate records for each element	Field inspection	N	Continuous	.	.
2. Verify placement locations and plumbness, confirm element diameters, bell diameters (if applicable), lengths, embedment into bedrock (if applicable) and adequate end-bearing strata capacity. Record concrete or grout volumes	Field inspection	N	Continuous	.	.
3. For concrete elements, perform additional inspections in accordance with Section 1705.3	See Section 1705.3	N	See Section 1705.3	.	.
4. Perform additional inspections and tests in accordance with the construction documents	Field inspection and testing	N	In Accordance with Construction Documents	.	.
1705.9 Helical Pile Foundations					
1. Verify installation equipment, pile dimensions, tip elevations, final depth, final installation torque and other data is required	Field inspection	N	Continuous	-	.
2. Perform additional inspections and tests in accordance with the construction documents	Field inspection and testing	N	In Accordance with Construction Documents	-	.
1705.10.1 Structural Wood Special Inspections For Wind Resistance					
1. Inspection of field gluing operations of elements of the main windforce-resisting system	Field inspection	N	Continuous	.	.
2. Inspection of nailing, bolting, anchoring and other fastening of components within the main windforce-resisting system	Shop (3) and field inspection	Y	Periodic	1	.
1705.10.2 Cold-formed Steel Special Inspections For Wind Resistance					
1. Inspection during welding operations of elements of the main windforce-resisting system	Shop (3) and field inspection	N	Periodic	.	.
2. Inspections for screw attachment, bolting, anchoring and other fastening of components within the main windforce-resisting system	Shop (3) and field inspection	N	Periodic	.	.
1705.10.3 Wind-resisting Components					
1. Roof cladding	Shop (3) and field inspection	N	Periodic	.	.
2. Wall cladding	Shop (3) and field inspection	Y	Periodic	1	.
1705.11.1 Structural Steel Special Inspections for Seismic Resistance					
Inspection of structural steel in accordance with AISC 341	Shop (3) and field inspection	N	In Accordance with ASCE 341	.	.
1705.11.2 Structural Wood Special Inspections for Seismic Resistance					
1. Inspection of field gluing operations of elements of the seismic-force resisting system	Field inspection	N	Continuous	.	.
2. Inspection of nailing, bolting, anchoring and other fastening of components within the seismic-force-resisting system	Shop (3) and field inspection	N	Periodic	.	.
1705.11.3 Cold-formed Steel Light-Frame Construction Special Inspections for Seismic Resistance					
1. Inspection during welding operations of elements of the seismic-force-resisting system	Shop (3) and field inspection	N	Periodic	.	.
2. Inspections for screw attachment, bolting, anchoring and other fastening of components within the seismic-force-resisting system	Shop (3) and field inspection	N	Periodic	.	.
1705.11.4 Designated Seismic Systems Verification					
Inspect and verify that the component label, anchorage or mounting conforms to the certificate of compliance in accordance with Section 1705.12.3	Field inspection	N	Periodic	.	.

SCHEDULE OF SPECIAL INSPECTION SERVICES

PROJECT

MATERIAL / ACTIVITY	SERVICE	APPLICABLE TO THIS PROJECT Y/N	EXTENT	AGENT*	DATE COMPLETED
1705.11.5 Architectural Components Special Inspections for Seismic Resistance					
1. Inspection during the erection and fastening of exterior cladding and interior and exterior veneer	Field inspection	N	Periodic	.	.
2. Inspection during the erection and fastening of interior and exterior nonbearing walls	Field inspection	N	Periodic	.	.
3. Inspection during anchorage of access floors	Field inspection	N	Periodic	.	.
1705.11.6 Mechanical and Electrical Components Special Inspections for Seismic Resistance					
1. Inspection during anchorage of electrical equipment for emergency or standby power systems	Field inspection	N	Periodic	.	.
2. Inspection during the anchorage of other electrical equipment	Field inspection	N	Periodic	.	.
3. Inspection during installation and anchorage of piping systems designed to carry hazardous materials, and their associated mechanical units	Field inspection	N	Periodic	.	.
4. Inspection during the installation and anchorage of HVAC ductwork that will contain hazardous materials	Field inspection	N	Periodic	.	.
5. Inspection during the installation and anchorage of vibration isolation systems	Field inspection	N	Periodic	.	.
1705.11.7 Storage Racks Special Inspection for Seismic Resistance					
Inspection during the anchorage of storage racks 8 feet or greater in height	Field inspection	N	Periodic	.	.
1705.11.8 Seismic Isolation Systems					
Inspection during the fabrication and installation of isolator units and energy dissipation devices used as part of the seismic isolation system	Shop and field inspection	N	Periodic	.	.
1705.12.1 Concrete Reinforcement Testing and Qualification for Seismic Resistance					
1. Review certified mill test reports for each shipment of reinforcement used to resist earthquake-induced flexural and axial forces in reinforced concrete special moment frames, special structural walls, and coupling beams connecting special structural walls	Review certified mill test reports	N	Each Shipment	.	.
2. Verify reinforcement weldability of ASTM A615 reinforcement used to resist earthquake-induced flexural and axial forces in reinforced concrete special moments frames, special structural walls, and coupling beams connecting special structural walls	Review test reports	N	Each Shipment	.	.
1705.12.2 Structural Steel Testing and Qualification for Seismic Resistance					
Test in accordance with the quality assurance requirements of AISC 341	Shop (3) and field testing	N	Per AISC 341	.	.
1705.12.3 Seismic Certification of Nonstructural Components					
Review certificate of compliance for designed seismic system components	Certificate of compliance review	N	Each Submittal	.	.
1705.12.4 Seismic Isolation Systems					
Test seismic isolation systems in accordance with ASCE 7, Section 17.8	Prototype testing	N	Per ASCE 7	.	.
1705.13 Sprayed Fire-resistant Materials					
1. Verify surface condition preparation of structural members	Field inspection	N	Periodic	.	.
2. Verify application of sprayed fire-resistant materials	Field inspection	N	Periodic	.	.
3.Verify average thickness of sprayed fire-resistant materials applied to structural members	Field inspection	N	Periodic	.	.
4. Verify density of sprayed fire-resistant material complies with approved fire-resistant design	Field inspection and testing	N	Per IBC Section 1705.13.5	.	.
5. Verify the cohesive/adhesive bond strength of the cured sprayed fire-resistant material	Field inspection and testing	N	Per IBC Section 1705.13.6	.	.
1705.14 Mastic and Intumescent Fire-resistant Coatings					
Inspect mastic and intumescent fire-resistant coatings applied to structural elements and decks	Field inspection	N	Periodic	.	.
1705.15 Exterior Insulation and Finish Systems (EIFS)					
1.Verify materials, details and installations are per the approved construction documents	Field inspection	N	Periodic	.	.
2. Inspection of water-resistive barrier over sheathing substrate	Field inspection	N	Periodic	.	.
1705.16 Fire-resistant Penetrations and Joints					
1. Inspect penetration firestop	Field testing	N	Per ASTM E2174	.	.
2. Inspect fire-resistant joint systems	Field testing	N	Per ASTM E2393	.	.
1705.17 Smoke Control Systems					
1. Leakage testing and recording of device locations prior to concealment	Field testing	N	Periodic	.	.
2. Prior to occupancy and after sufficient completion, pressure difference testing, flow measurements, and detection and control vertification	Field testing	N	Periodic	.	.

* INSPECTION AGENTS	FIRM	ADDRESS	TELEPHONE NO.
1. To be determined			
2.			
3.			
4.			

Notes:
1. *The inspection and testing agent(s) shall be engaged by the Owner or the Owner's Agent, and not by the Contractor orsubcontractor whose work is to be inspected or tested. Any conflict of interest must be disclosed to the Building Official prior to commencing work. The qualifications of the Special Inspector(s) and/or testing agencies may be subject to the approval of the Building Official and/or the Design Professional.*
2. *The list of Special Inspectors may be submitted as a separate document, if noted so above.*
3. *Special Inspections as required by Section 1704.2.5 are not required where the fabricator is approved in accordance with IBC Section 1704.2.5.2*
4. *Observe on a random basis, operations need not be delayed pending these inspections. Perform these tasks on each welded joint, bolted connection, or steel element.*
5. *NDT of welds competed in an approved fabricator's shop may be performed by that fabricator when approved by the AHJ. Refer to AISC 360, N7*

Encircle "Yes" or "No" as appropriate and date this document below:

Are Requirements for Seismic Resistance included in the Statement of Special Inspections? Yes No

Are Requirements for Wind Resistance included in the Statement of Special Inspections? Yes No

DATE: 12 -07-2023

COMMONWEALTH OF VIRGINIA
DAVID R. HALL
Lic. No.15054
12/07/23
PROFESSIONAL ENGINEER

PLEASE READ BEFORE OPENING ELECTRONIC FILES OR PRINTING DRAWINGS AND SPECIFICATIONS ADDITIONAL RESTRICTIONS MAY APPLY. THE ARCHITECT WILL ONLY ISSUE PRINTED COPIES (NO ELECTRONIC FORMS) OF THE DRAWINGS AND SPECIFICATIONS TO THE OWNER AND CONTRACTOR FOR THE PURPOSE OF CONSTRUCTION PROVIDED THE OWNER AND CONTRACTOR AGREE TO THE FOLLOWING: THE DRAWINGS AND SPECIFICATIONS ARE THE PROPERTY OF THE ARCHITECT AND THE ARCHITECT RETAINS THE COPYRIGHT. THE DRAWINGS AND SPECIFICATIONS ARE TO BE USED ONLY FOR THIS PROJECT AND NOT TO BE LOANED OR PROVIDED TO ANY OTHER PERSON OR ENTITY FOR ANY PURPOSE OR USE WITHOUT THE PRIOR WRITTEN PERMISSION OF THE ARCHITECT. THE ARCHITECT MAY PROVIDE ELECTRONIC FORMS OF THE DRAWINGS AND SPECIFICATIONS TO THE OWNER AND CONTRACTOR PROVIDED THEY AGREE TO THE FOLLOWING: THE ELECTRONIC FORMS ARE INTENDED TO BE VIEWED ONLY. THE OWNER AND CONTRACTOR AGREE NOT TO MODIFY THE ELECTRONIC FORMS OR REMOVE ANY WATERMARKS ON THE ELECTRONIC FORMS. THE OWNER AND CONTRACTOR AGREE NOT TO REPRODUCE OR DISTRIBUTE THE ELECTRONIC FORMS OR ANY PORTION THEREOF TO ANY OTHER PERSON OR ENTITY WITHOUT THE ARCHITECT'S PRIOR WRITTEN PERMISSION. THE ELECTRONIC FORMS OF THE DRAWINGS AND SPECIFICATIONS MAY CONTAIN DEFECTS OR INACCURACIES. THE ARCHITECT MAKES NO REPRESENTATIONS AS TO THE ACCURACY OR COMPLETENESS OF THE ELECTRONIC FORMS. THE OWNER AND CONTRACTOR AGREE THAT THEY ARE ELECTRONIC FORMS AT THEIR OWN RISK AND THE ARCHITECT SHALL NOT BE LIABLE FOR ANY LOSSES OR DAMAGES ARISING FROM THE USE OF THE ELECTRONIC FORMS. IF THESE TERMS ARE UNDERSTOOD AND ACCEPTED, THE ARCHITECT WILL THEN PROVIDE THE ELECTRONIC FORMS TO THE OWNER AND CONTRACTOR. THE ELECTRONIC FORMS WILL BE PROVIDED WITHOUT ANY WARRANTY OF ANY KIND, EXPRESS OR IMPLIED, INCLUDING, BUT NOT LIMITED TO, THE IMPLIED WARRANTIES OF MERCHANTABILITY AND FITNESS FOR A PARTICULAR PURPOSE.

IF THESE FILES ARE USED TO ASSIST IN SHOP DRAWING PREPARATION, THE ELECTRONIC FILES WILL BE CONSIDERED AND NO SHOP DRAWINGS WILL BE REVIEWED UNLESS ACCOMPANIED BY A PRINTED SET OF DRAWINGS. THE ARCHITECT WILL REVIEW ONE (1) SET OF SHOP DRAWINGS ONLY FOR GENERAL CONFORMANCE WITH THE DESIGN INTENT AND THE INFORMATION SHOWN ON THE CONTRACT DRAWINGS. ADDITIONAL SETS WILL BE RETURNED WITHOUT REVIEW. THE CONTRACTOR IS RESPONSIBLE FOR ALL DIMENSIONS, DIMENSIONS TO BE CONFIRMED AT JOB SITE, AND FOR COORDINATION OF THE WORK OF ALL TRADES. THE ARCHITECT IS NOT RESPONSIBLE FOR ANY ERRORS OR OMISSIONS IN THE SHOP DRAWINGS. THE ARCHITECT'S REVIEW OF SHOP DRAWINGS DOES NOT RELIEVE THE CONTRACTOR OF THE RESPONSIBILITY FOR THE ACCURACY OF DIMENSIONS, QUANTITIES, AND MATERIALS, NOR DOES IT RELIEVE THE CONTRACTOR OF THE RESPONSIBILITY FOR ERRORS OR OMISSIONS IN THE SHOP DRAWINGS THAT HAVE NOT BEEN BROUGHT TO THE ATTENTION OF AND APPROVED BY THE ARCHITECT IN WRITING. THE ARCHITECT'S REVIEW OF SHOP DRAWINGS DOES NOT INCLUDE REVIEW OF THE ADEQUACY OF ANY SAFETY PRECAUTIONS OR PROCEDURES.

BECAUSE OF THE FLUID CONDITIONS, AS WELL AS ERRORS, MISTAKES, OMISSIONS, THE ARCHITECT'S COPYRIGHT RESTRICTIONS, AND THE POSSIBILITY OF UNAUTHORIZED ALTERATIONS, THE ARCHITECT WILL ONLY ISSUE PRINTED COPIES OF THE DRAWINGS AND SPECIFICATIONS TO THE OWNER AND CONTRACTOR.

No.	Issue Notes	Date
1	12/7/2023 permit subm	12/07/2023
2	01/03/24 RELEASE FOR BID	01/03/24

No.	Date	Revision Notes	Zone	Appr

Project Title: Culpeper County Community Pool Project
16388 Competition Drive
Culpeper, VA

Sheet Title: STRUCTURAL PLAN & DETAILS
SCHEDULE OF SPECIAL INSPECTIONS

Scale: AS SHOWN

Sheet No.: S100.1
of

Design Firm: NORMAN SMITH ARCHITECTURE
1341 H Street, Washington, DC 20002-4906
3637 Slate Mills Road, Sperryville, VA 22740
T 202.462.5886 www.normansmitharchitecture.com

Consultant: DRH ENGINEERS, PLC
CIVIL • STRUCTURAL • FORENSIC
210 Grandview Lane, Suite 100, Warrenton, VA 20187
540.347.8100 www.drhengineers.com

Designed By	Drawn By	Checked By	Reviewed By	Submitted By	Revision By
DRH	DRH	DRH	DRH	DRH	DRH

Date: 12/07/2023
Revision:
Project #: 23703-culpeper
JOB# 2230393.00
Drawing Type: Drawing Code
CAD File Name: DRH STRUCTURAL PLANS
Plot Date: 00/00/00

Registered Professional Engineer: DAVID R. HALL, P.E.

K:\223 STRUCT PROJECTS\2230393 - Norman Smith Arch - SE Svcs-Culpeper Co Comm Pool\DRH-STRUCTURAL PLANS.dwg, 1/10/2024 6:23:24 PM, _AutoCAD PDF (High Quality Print).pc3

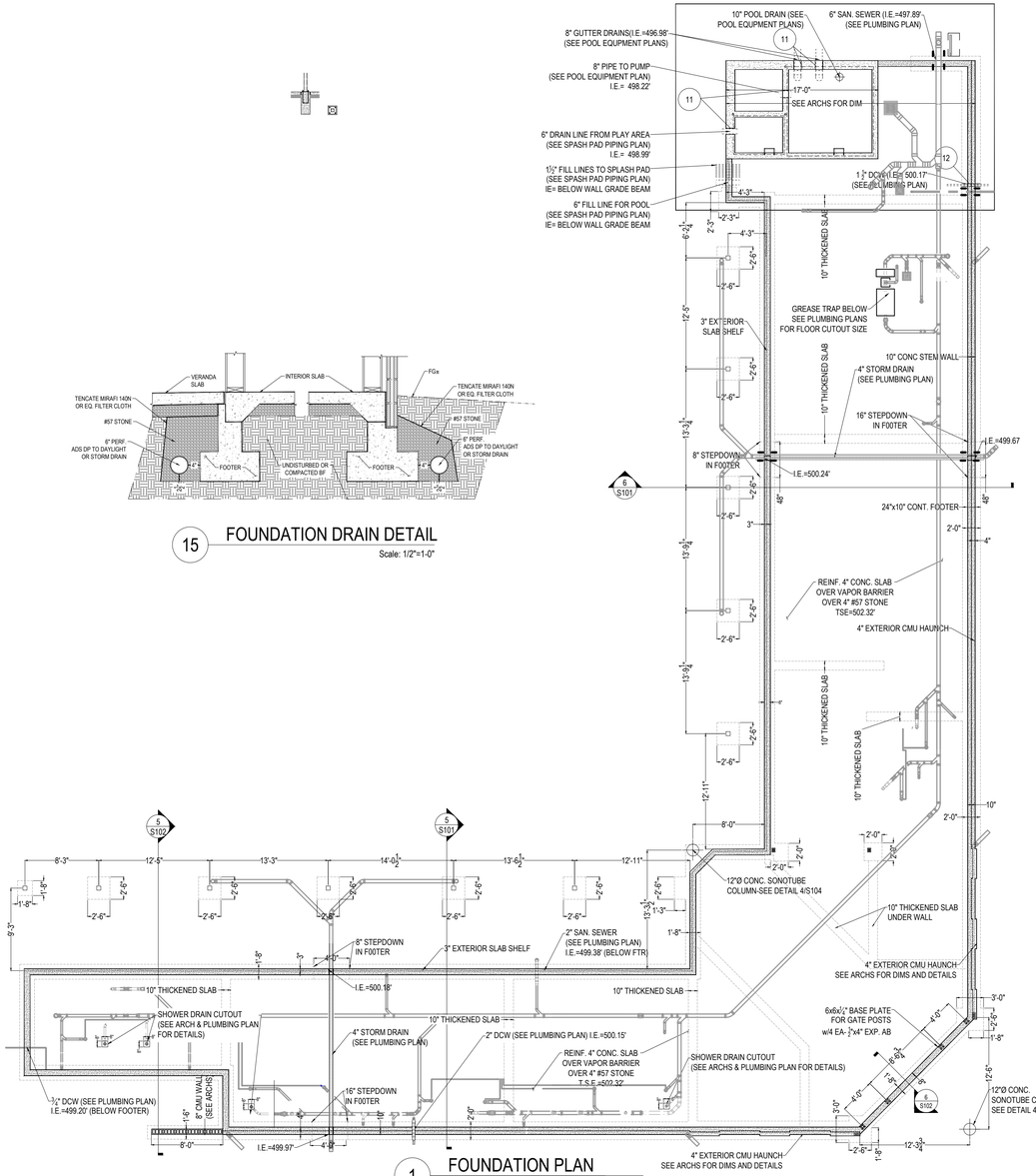

1 FOUNDATION PLAN
Scale: 1/8"=1-0"

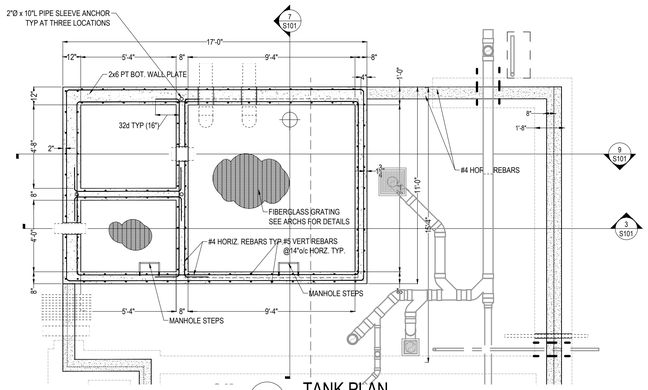

2 TANK PLAN
Scale: 1/4"=1-0"

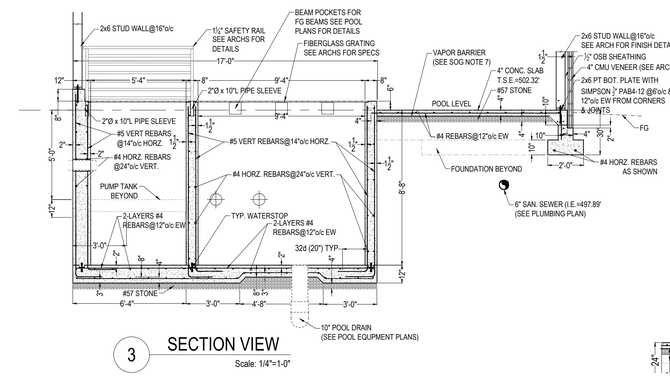

3 SECTION VIEW
Scale: 1/4"=1-0"

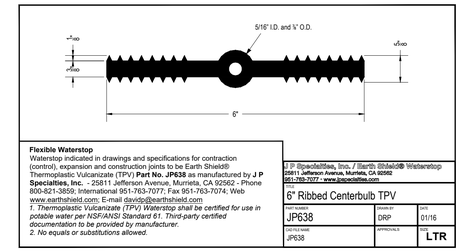

Flexible Waterstop
Waterstop indicated in drawings and specifications for contraction (control), expansion and construction joints to be Earth Shield® Thermoplastic Vulcanizate (TPV) **Part No. JP638** as manufactured by **J P Specialties, Inc.** - 25811 Jefferson Avenue, Murrieta, CA 92562 - Phone 800-821-3859; International 951-763-7077; Fax 951-763-7074; Web www.earthshield.com; E-mail davidp@earthshield.com
1. Thermoplastic Vulcanizate (TPV) Waterstop shall be certified for use in potable water per NSF/ANSI Standard 61. Third-party certified documentation to be provided by manufacturer.
2. No equals or substitutions allowed.

J P Specialties, Inc. / Earth Shield® Waterstop
25811 Jefferson Avenue, Murrieta, CA 92562
951-763-7077 • www.jpspecialties.com

6" Ribbed Centerbulb TPV

PART NAME	DRAWN BY	DATE
JP638	DRP	01/16
DETAIL NAME	APPROVALS	SIZE
JP638		LTR

4 WATERSTOP DETAIL
Scale: N.T.S.

15 FOUNDATION DRAIN DETAIL
Scale: 1/2"=1-0"

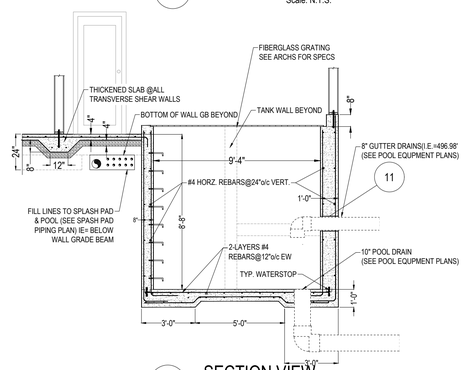

7 SECTION VIEW
Scale: 1/4"=1-0"

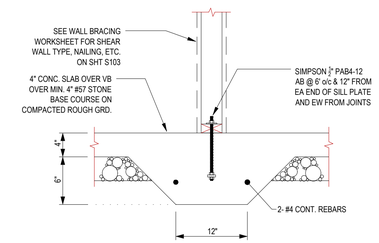

8 THICKENED SLAB DETAIL (SHEAR WALLS)
Scale: N.T.S.

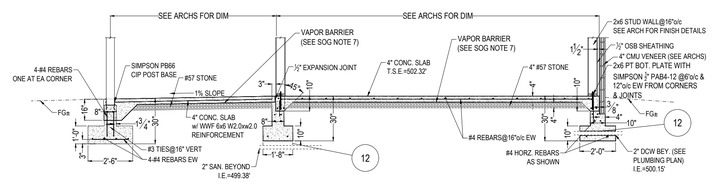

5 SECTION VIEW
Scale: 1/4"=1-0"

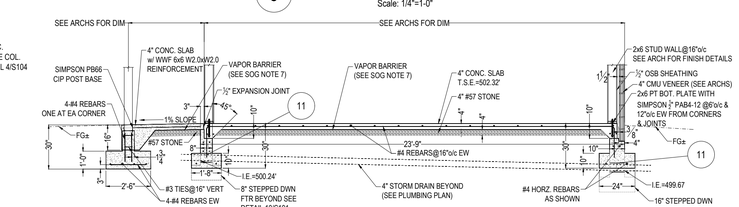

6 SECTION VIEW
Scale: 1/4"=1-0"

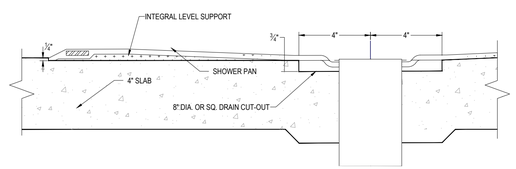

8.1 SHOWER PAN CUTOUT DETAIL
Scale: 3"=1-0"

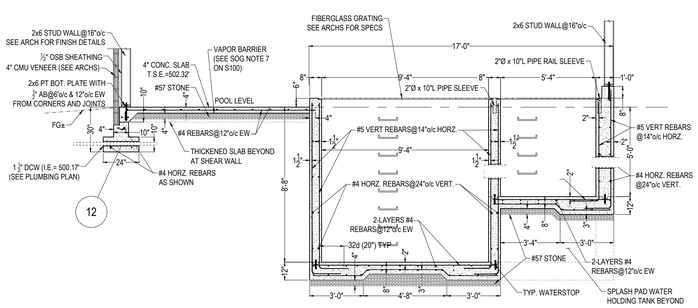

9 SECTION VIEW
Scale: 1/4"=1-0"

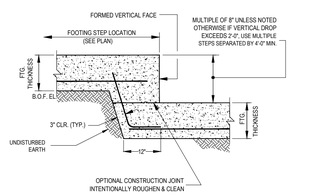

10 TYPICAL STEPPED FOOTING DETAIL
SCALE: 1/2" = 1'-0"

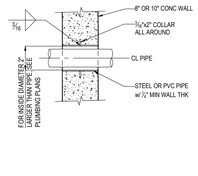

11 TYPICAL PIPE THRU WALL DETAIL
SCALE: 1/2" = 1'-0"

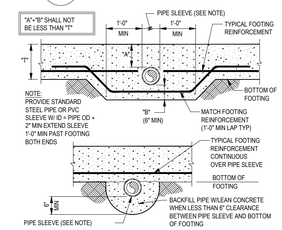

12 TYPICAL PIPE THRU FOOTING DETAIL
SCALE: 1/2" = 1'-0"

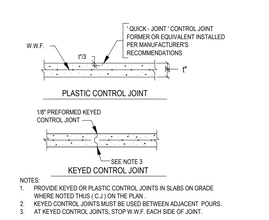

NOTES:
1. PROVIDE KEYED OR PLASTIC CONTROL JOINTS IN SLABS ON GRADE WHERE NOTED THUS (C.J.) ON THE PLAN .
2. KEYED CONTROL JOINTS MUST BE USED BETWEEN ADJACENT POURS.
3. AT KEYED CONTROL JOINTS, STOP W.W.F. EACH SIDE OF JOINT.

13 TYPICAL CONTROL JOINT DETAIL
SCALE: 1/2" = 1'-0"

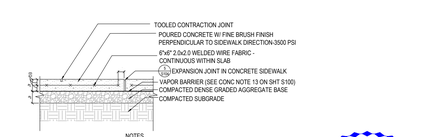

NOTES
1. PROVIDE CONTRACTION JOINTS, AS SHOWN ON PLANS.
2. PROVIDE EXPANSION JOINTS WITHIN THE SIDEWALK, AS SHOWN ON PLANS. EXPANSION JOINTS SHALL ALSO BE PLACED WHERE SIDEWALKS ABUT FIXED OBJECTS INCLUDING CURBS, STAIRS, WALLS, AND EXISTING CONCRETE PAVING.
3. ALL EXPOSED CONCRETE SIDEWALKS TO BE ARCHITECTURAL CONCRETE - TO MATCH THE COLOR OF NATURAL LIMESTONE

14 TYPICAL SITE WALK DETAIL
SCALE: 1/2" = 1'-0"

COMMONWEALTH OF VIRGINIA
DAVID R. HALL
Lic. No.15054
12/07/23
PROFESSIONAL ENGINEER

PLANS AND SPECIFICATIONS FURNISHED UNDER THIS SEAL ARE INSTRUMENTS OF SERVICE THROUGH EXECUTION OF THE PROJECT ONLY AND REMAIN THE PROPERTY OF THE ARCHITECT AND THE CONSULTANTS. THEY ARE TO BE RETURNED UPON REQUEST AT COMPLETION OF THE PROJECT. THE ARCHITECT AND THE CONSULTANTS HAVE THE PROPERTY RIGHTS TO THE DOCUMENTS, DESIGNS AND CONCEPTS EMBODIED IN THESE PLANS AND SPECIFICATIONS, WHICH MAY NOT BE USED FOR OTHER PROJECTS OR EXTENSIONS OF THIS PROJECT EXCEPT BY AGREEMENT IN WRITING BY THE ARCHITECT AND THE CONSULTANTS. REUSE BY THE OWNER FOR COMPLETION OF THE PROJECT BY OTHERS IS NOT PROHIBITED BY THIS NOTICE.

IF THERE IS ITEM OR NOTE SHOWN IN SHOP DRAWING PREPARATION, THE ELEVATIONS ARE TO BE CONFIRMED AND NO ADDITIONAL COMPENSATION WILL BE ALLOWED FOR ANY ADJUSTMENTS REQUIRED DUE TO THE ELEVATIONS NOT BEING CONFIRMED.

THE CONTRACTOR SHALL VERIFY ALL DIMENSIONS, QUANTITIES AND CONDITIONS PRIOR TO THE PREPARATION OF SHOP DRAWINGS OR THE FABRICATION OF ANY MATERIALS, BUILDING COMPONENTS OR EQUIPMENT. ANY DISCREPANCIES FOUND SHALL BE REPORTED TO THE ARCHITECT FOR ADJUSTMENT BEFORE PROCEEDING WITH THE WORK. ANY WORK THAT MAY BE AFFECTED BY SUCH DISCREPANCIES SHALL BE DEEMED TO BE WITHIN THE SCOPE OF THE CONTRACT UNLESS ADVISED OTHERWISE.

VERIFY ALL EXISTING CONDITIONS, DIMENSIONS, ELEVATIONS AND LOCATIONS OF UTILITIES AND SERVICES IN THE FIELD PRIOR TO CONSTRUCTION. NOTIFY ARCHITECT OF ANY VARIANCE BETWEEN ACTUAL AND DRAWINGS.

REFER TO ARCHITECTURAL DRAWINGS FOR ALL DIMENSIONS, DETAILS, NOTES, SPECIFICATIONS, ETC. NOT SHOWN OR INCORRECTLY SHOWN ON STRUCTURAL DRAWINGS.

DRAWINGS AND SPECIFICATIONS AND THE DESIGN CONCEPTS EMBODIED THEREIN ARE THE PROPERTY OF THE ARCHITECT AND THE CONSULTANTS. THEY ARE TO BE RETURNED UPON COMPLETION OF THE PROJECT. THE ARCHITECT AND THE CONSULTANTS HAVE THE PROPERTY RIGHTS TO THE DOCUMENTS, DESIGNS AND CONCEPTS EMBODIED IN THESE PLANS AND SPECIFICATIONS, WHICH MAY NOT BE USED FOR OTHER PROJECTS OR EXTENSIONS OF THIS PROJECT EXCEPT BY AGREEMENT IN WRITING BY THE ARCHITECT AND THE CONSULTANTS.

No.	Date	Issue Notes
1	12/7/2023	permit subm
2	01/03/24	RELEASE FOR BID

No.	Date	Revision Notes	Zone	Appr

Culpeper County
Community Pool Project
16388 Competition Drive
Culpeper, VA

STRUCTURAL PLAN & DETAILS
FOUNDATION PLAN-SECTION-DETAILS

Scale AS SHOWN

Sheet No. S101 of

Project Info: NORMAN SMITH ARCHITECTURE, 1341 H Street, Washington, DC 20002-4506, 3637 State Mills Road, Sperryville, VA 22740, P 202.462.3886, www.normansmitharchitecture.com

Consultant: DRH ENGINEERS, PLC, CIVIL · STRUCTURAL · FORENSIC, 2150 Brookstone Lane, Suite 100, Warrenton, VA 20187, 540.347.4488, www.drhengineers.com

Checked By	Drawn By	Checked By	Reviewed By	Submitted By	Project Mgr
DRH	DRH	DRH	DRH	DRH	DRH

Date 12/07/2023
Revision
Project # 23733 culpeper
Drawing # DRH 2230393.00
Drawing Code
CAD File
DRH STRUCTURAL PLANS
Plot Date 00/00/00
Plot By DAVID R. HALL, P.E.

K:\223 STRUCT PROJECTS\2230393 - Norman Smith Arch - SE Svcs-Culpeper Co Comm Pool\DRH-STRUCTURAL PLANS.dwg, 1/10/2024 6:24:29 PM, _AutoCAD PDF (High Quality Print).pc3

1 UPPER LEVEL WALLS & ROOF FRAMING PLAN

Scale: 1/8"=1-0"

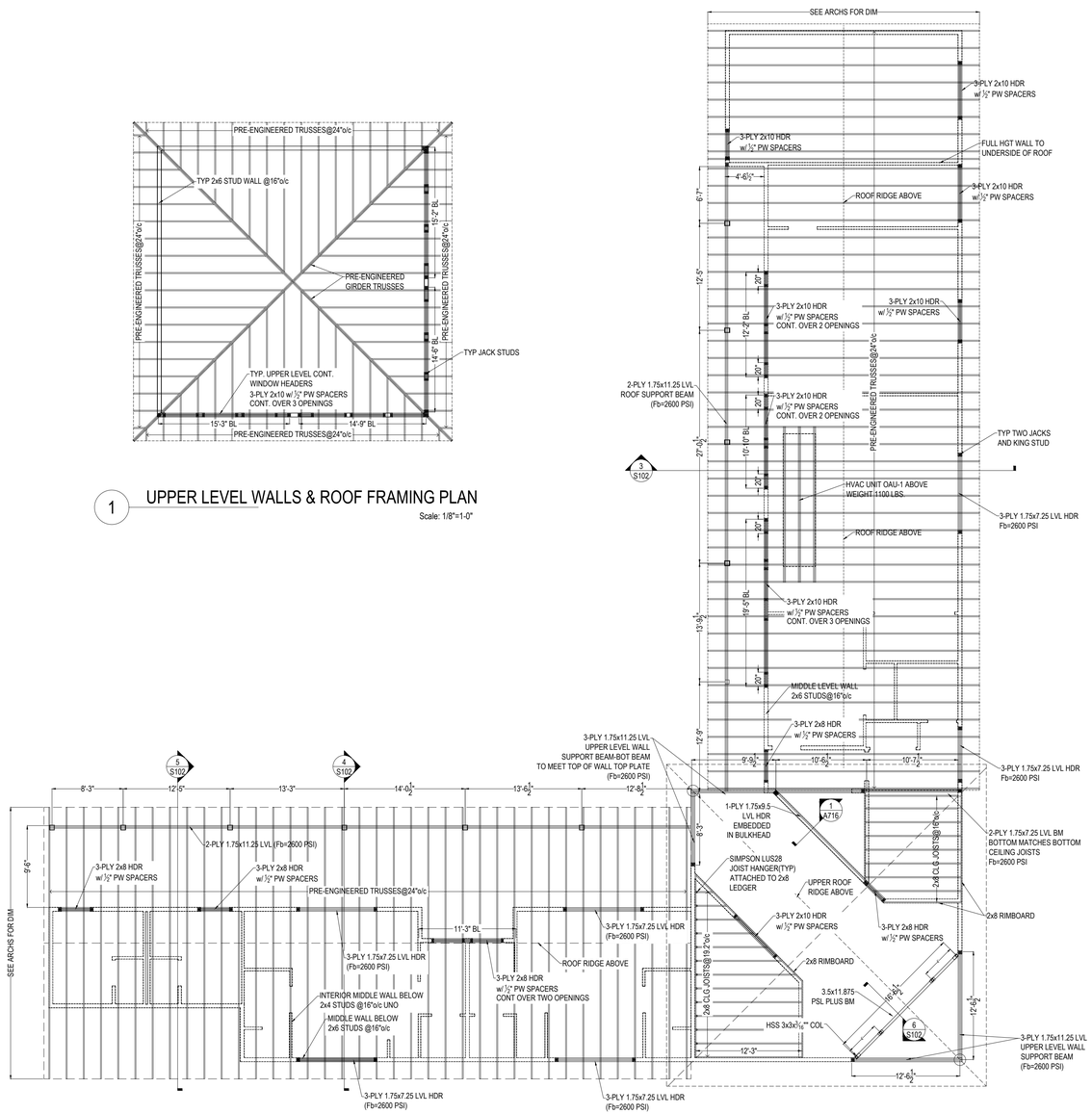

2 MIDDLE LEVEL WALLS & ROOF FRAMING PLAN

Scale: 1/8"=1-0"

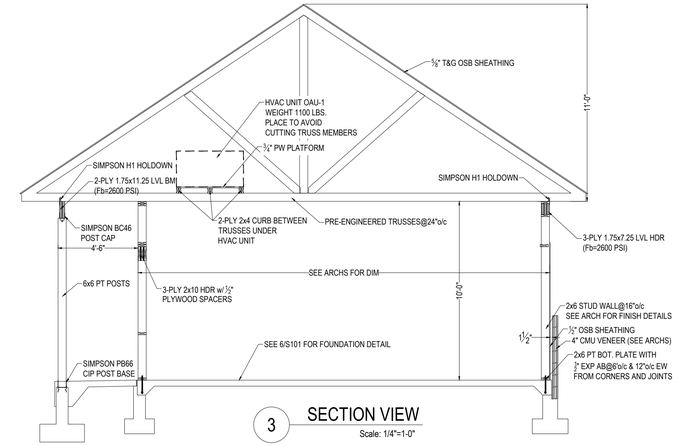

3 SECTION VIEW

Scale: 1/4"=1-0"

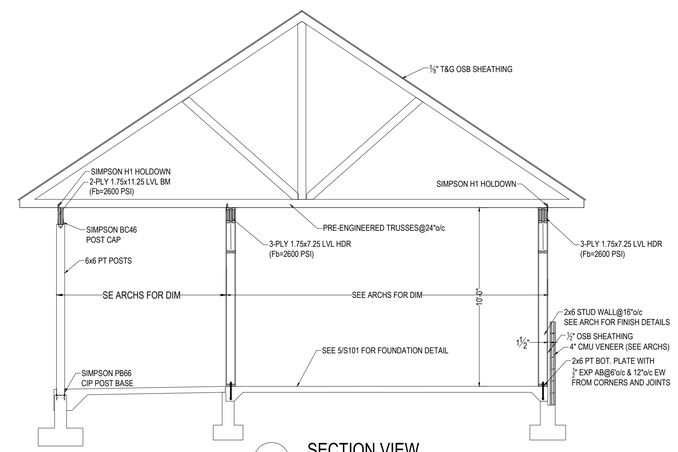

4 SECTION VIEW

Scale: 1/4"=1-0"

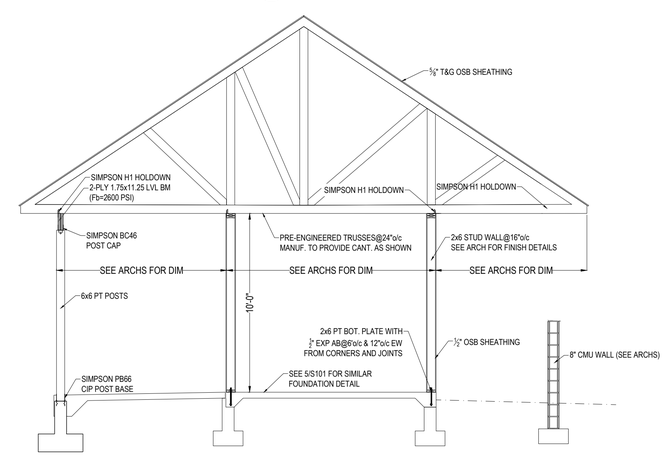

5 SECTION VIEW

Scale: 1/4"=1-0"

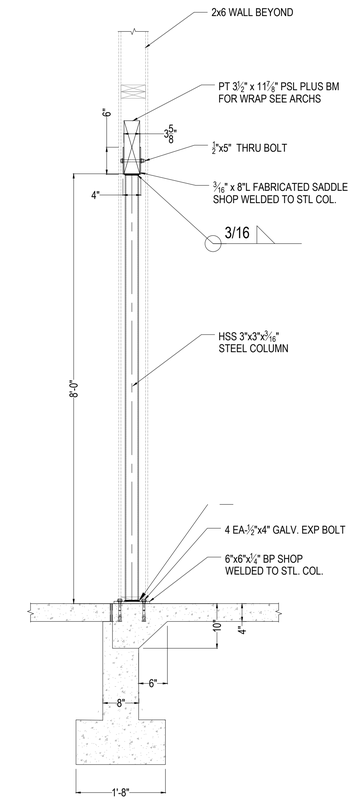

6 SECTION VIEW

Scale: 3/4"=1-0"

COMMONWEALTH OF VIRGINIA
DAVID R. HALL
Lic. No.15054
12/07/23
PROFESSIONAL ENGINEER

PLAN AND ALL REPORT DRAWINGS & SPECIFICATIONS FILES WERE PROVIDED TO DRH ENGINEERS, PLLC BY NORMAN SMITH ARCHITECTURE. DRAWINGS AND SPECIFICATIONS AND THE SEALS, LIKENESS AND SIGNATURES THEREON, WHICH ARE THE PROPERTY OF THE ARCHITECT, AND AS AN INSTRUMENT OF SERVICE, ARE TO BE RETURNED UPON REQUEST OF THE ARCHITECT AND NOT TO BE USED BY OTHERS ON THIS OR ANY OTHER PROJECT, EXTENSION OF THIS PROJECT OR ON ANY OTHER PROJECT EXCEPT BY AGREEMENT IN WRITING AND WITH APPROPRIATE COMPENSATION TO THE ARCHITECT. THE CONTRACTOR WILL REPORT TO THE ARCHITECT ANY ERRORS, INCONSISTENCIES OR OMISSIONS HE MAY DISCOVER IN THE DRAWINGS OR SPECIFICATIONS BEFORE PROCEEDING WITH THE WORK Aaffected THEREBY. THE CONTRACTOR SHALL BE RESPONSIBLE FOR THE CORRECTION OF WORK THAT MAY BE AFFECTED BY ANY ERRORS, INCONSISTENCIES OR OMISSIONS IN THE DRAWINGS OR SPECIFICATIONS WHICH HE FAILS TO REPORT TO THE ARCHITECT. THE ARCHITECT DOES NOT REPRESENT THAT THE DRAWINGS OR SPECIFICATIONS ARE ERROR-FREE OR COMPLETE. THE CONTRACTOR SHALL BE RESPONSIBLE FOR THE CORRECTION OF ERRORS, INCONSISTENCIES OR OMISSIONS IN THE DRAWINGS OR SPECIFICATIONS WHICH HE FAILS TO REPORT TO THE ARCHITECT. THE ARCHITECT SHALL NOT BE LIABLE FOR ANY DAMAGES ARISING FROM ERRORS, INCONSISTENCIES OR OMISSIONS IN THE DRAWINGS OR SPECIFICATIONS WHICH THE CONTRACTOR FAILS TO REPORT TO THE ARCHITECT. THE ARCHITECT SHALL NOT BE LIABLE FOR ANY DAMAGES ARISING FROM ERRORS, INCONSISTENCIES OR OMISSIONS IN THE DRAWINGS OR SPECIFICATIONS WHICH THE CONTRACTOR FAILS TO REPORT TO THE ARCHITECT. THE ARCHITECT SHALL NOT BE LIABLE FOR ANY DAMAGES ARISING FROM ERRORS, INCONSISTENCIES OR OMISSIONS IN THE DRAWINGS OR SPECIFICATIONS WHICH THE CONTRACTOR FAILS TO REPORT TO THE ARCHITECT. THE ARCHITECT SHALL NOT BE LIABLE FOR ANY DAMAGES ARISING FROM ERRORS, INCONSISTENCIES OR OMISSIONS IN THE DRAWINGS OR SPECIFICATIONS WHICH THE CONTRACTOR FAILS TO REPORT TO THE ARCHITECT.

IF THERE ARE ANY ISSUES RELATED TO ERRORS IN SHOP DRAWING TRANSMITTAL, THE ELEVATIONS AS CONTRACTED AND NO ADDITIONAL COMPENSATION WILL BE ALLOWED. THE CONTRACTOR SHALL BE RESPONSIBLE FOR THE CORRECTION OF ERRORS, INCONSISTENCIES OR OMISSIONS IN THE DRAWINGS OR SPECIFICATIONS WHICH HE FAILS TO REPORT TO THE ARCHITECT. THE ARCHITECT SHALL NOT BE LIABLE FOR ANY DAMAGES ARISING FROM ERRORS, INCONSISTENCIES OR OMISSIONS IN THE DRAWINGS OR SPECIFICATIONS WHICH THE CONTRACTOR FAILS TO REPORT TO THE ARCHITECT. THE ARCHITECT SHALL NOT BE LIABLE FOR ANY DAMAGES ARISING FROM ERRORS, INCONSISTENCIES OR OMISSIONS IN THE DRAWINGS OR SPECIFICATIONS WHICH THE CONTRACTOR FAILS TO REPORT TO THE ARCHITECT. THE ARCHITECT SHALL NOT BE LIABLE FOR ANY DAMAGES ARISING FROM ERRORS, INCONSISTENCIES OR OMISSIONS IN THE DRAWINGS OR SPECIFICATIONS WHICH THE CONTRACTOR FAILS TO REPORT TO THE ARCHITECT.

No.	Date	Issue Notes	Zone	Appr
1	12/7/2023	permit subm		
2	01/03/24	RELEASE FOR BID		

Date	12/07/2023	Checked By	DRH
Scale		Drawn By	DRH
Project ID	22703-culpeper	Checked By	DRH
Drawing Order	2230393.00	Reviewed By	DRH
Drawing Code	Drawing Code	Submitted By	DRH
CAD File Name	DRH STRUCTURAL PLANS	Reviewed By	DRH
Plot Date	00/00/00	Project Manager	DAVID R. HALL, P.E.

Design Firm
NORMAN SMITH ARCHITECTURE
1341 H Street, Washington, DC 20002-4906
3637 Slate Mills Road, Sperryville, VA 22740
T: 202.462.5886 www.normansmitharchitecture.com

Consultant
DRH ENGINEERS, PLC
CIVIL • STRUCTURAL • FORENSIC
2100 Brewster Lane, Suite 100, Winchester, VA 22601
540.665.9300

Project Title
Culpeper County Community Pool Project
16388 Competition Drive
Culpeper, VA

Sheet Title
STRUCTURAL PLAN & DETAILS
FRAMING PLAN - SECTIONS

Scale: AS SHOWN

Sheet No.
S102
of

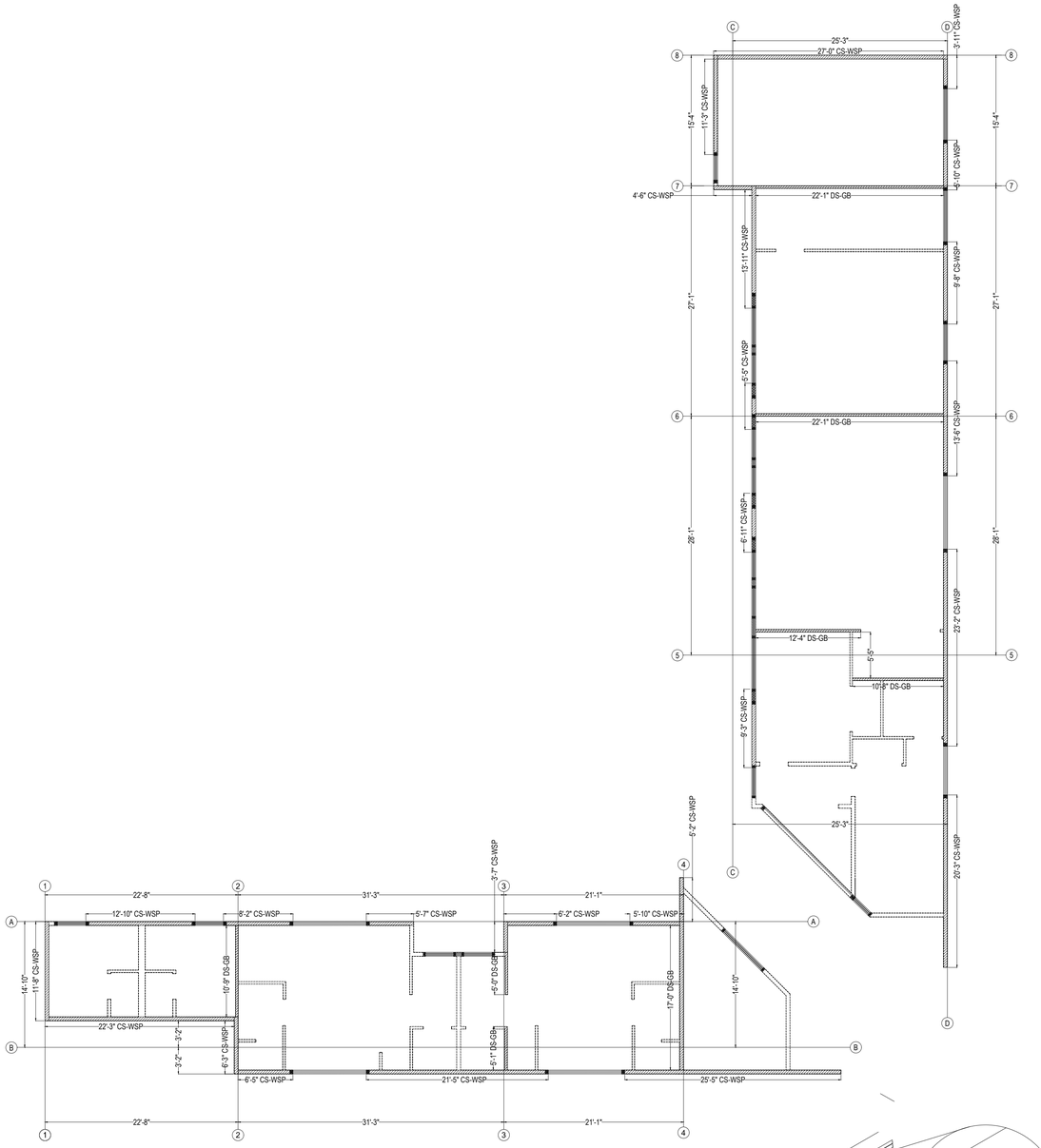

1 BRACE WALL PLAN

Scale: 1/8"=1'-0"

Wall Bracing Worksheet

per 2018 Virginia Statewide Building Code

Ultimate Wind Speed (mph)	115																							
BWL Designation	1		2		3		4		5		6		7		8		A		B		C		D	
No. of Floors above BWL	0		0		0		0		0		0		0		0		0		0		0		0	
BWP Method	CS-WSP		CS-WSP		CS-WSP		CS-WSP		CS-WSP		CS-WSP		CS-WSP		CS-WSP		CS-WSP		CS-WSP		CS-WSP		CS-WSP	
Average BWL Spacing (ft)	22.67		26.96		26.17		21.08		28.1		27.58		21.205		15.33		14.83		14.83		25.25		25.25	
Tabular Requirement (ft)	3.77		4.20		4.12		3.61		4.31		4.26		3.62		2.80		2.72		2.72		4.03		4.03	
Adjustments: Exposure	B	1.00	B	1.00	B	1.00	B	1.00	B	1.00	B	1.00	B	1.00	B	1.00	B	1.00	B	1.00	B	1.00	B	1.00
Adjustments: Eave-to-Ridge Ht. (ft)	11.00	1.06	11.00	1.06	11.00	1.06	11.00	1.06	11.00	1.06	11.00	1.06	11.00	1.06	11.00	1.06	11.00	1.06	11.00	1.06	11.00	1.06	11.00	1.06
Adjustments: Max. Wall Ht. (ft)	10.00	1.00	10.00	1.00	10.00	1.00	10.00	1.00	10.00	1.00	10.00	1.00	10.00	1.00	10.00	1.00	10.00	1.00	10.00	1.00	10.00	1.00	10.00	1.00
Adjustments: No. of BWLs	4	1.45	4	1.45	4	1.45	4	1.45	4	1.45	4	1.45	4	1.45	4	1.45	2	1.00	2	1.00	2	1.00	2	1.00
Adjustments: Omit Interior Finish?	No	1.00	No	1.00	No	1.00	No	1.00	No	1.00	No	1.00	No	1.00	No	1.00	No	1.00	No	1.00	No	1.00	No	1.00
Adjustments: Added Hold-downs?	No	1.00	No	1.00	No	1.00	No	1.00	No	1.00	No	1.00	No	1.00	No	1.00	No	1.00	No	1.00	No	1.00	No	1.00
Adjustments: Joints Blocked?	Yes	1.00	Yes	1.00	Yes	1.00	Yes	1.00	Yes	1.00	Yes	1.00	Yes	1.00	Yes	1.00	Yes	1.00	Yes	1.00	Yes	1.00	Yes	1.00
Adjustments: Fasteners @ 4" o.c.?	No	1.00	No	1.00	No	1.00	No	1.00	No	1.00	No	1.00	No	1.00	No	1.00	No	1.00	No	1.00	No	1.00	No	1.00
Required BWP Length (ft)	5.79		6.45		6.33		5.55		6.62		6.54		5.56		4.30		2.89		2.89		4.27		4.27	
Actual BWPs: Contributing Length (ft) (WSP=actual, SFB=actual, GB(ss)=0.5xactual, GB(ds)=actual, CS-PF=1.5xactual, PFG=1.5xactual, PF/H=4', ABW=4') — BWP	Method	Length	Method	Length	Method	Length	Method	Length	Method	Length	Method	Length	Method	Length	Method	Length	Method	Length	Method	Length	Method	Length	Method	Length
1	CS-WSP	11.67	CS-WSP	6.25	CS-WSP	3.58	CS-WSP	5.16	GB (ds)	12.33	GB (ds)	22.08	CS-WSP	4.50	CS-WSP	27.00	CS-WSP	12.83	CS-WSP	22.25	CS-WSP	11.25	CS-WSP	3.92
2			GB (ds)	10.75	GB (ds)	5.00	GB (ds)	17.00	GB (ds)	10.67			GB (ds)	22.08			CS-WSP	8.16	CS-WSP	6.42	CS-WSP	13.92	CS-WSP	5.83
3					GB (ds)	5.08											CS-WSP	5.58	CS-WSP	21.42	CS-WSP	5.42	CS-WSP	9.67
4																	CS-WSP	6.16	CS-WSP	25.42	CS-WSP	6.92	CS-WSP	13.50
5																	CS-WSP	5.83			CS-WSP	9.25	CS-WSP	23.16
6																							CS-WSP	20.25
7																								
Actual BWP Length (ft)	11.67		17.00		13.66		22.16		23.00		22.08		26.58		27.00		38.56		75.51		46.76		76.33	
Actual ≥ Required?	PASS		PASS		PASS		PASS		PASS		PASS		PASS		PASS		PASS		PASS		PASS		PASS	
BWPs ≤ 20' Apart?	Yes		Yes		Yes		Yes		Yes		Yes		Yes		Yes		Yes		Yes		Yes		Yes	
≥ 2 Panels in BWL?	Yes		Yes		Yes		Yes		Yes		Yes		Yes		Yes		Yes		Yes		Yes		Yes	
BWP 10' from Ends?	Yes		Yes		Yes		Yes		Yes		Yes		Yes		Yes		Yes		Yes		Yes		Yes	
Continuous Sheathing	End 1	End 2	End 1	End 2	End 1	End 2	End 1	End 2	End 1	End 2	End 1	End 2	End 1	End 2	End 1	End 2	End 1	End 2	End 1	End 2	End 1	End 2	End 1	End 2
End Conditions	1	1	NA	1	NA	NA	NA	NA	NA	NA	NA	NA	1	NA	1	1	1	1	1	NA	1	1	1	NA
BWL Compliance	PASS		PASS		PASS		PASS		PASS		PASS		PASS		PASS		PASS		PASS		PASS		PASS	

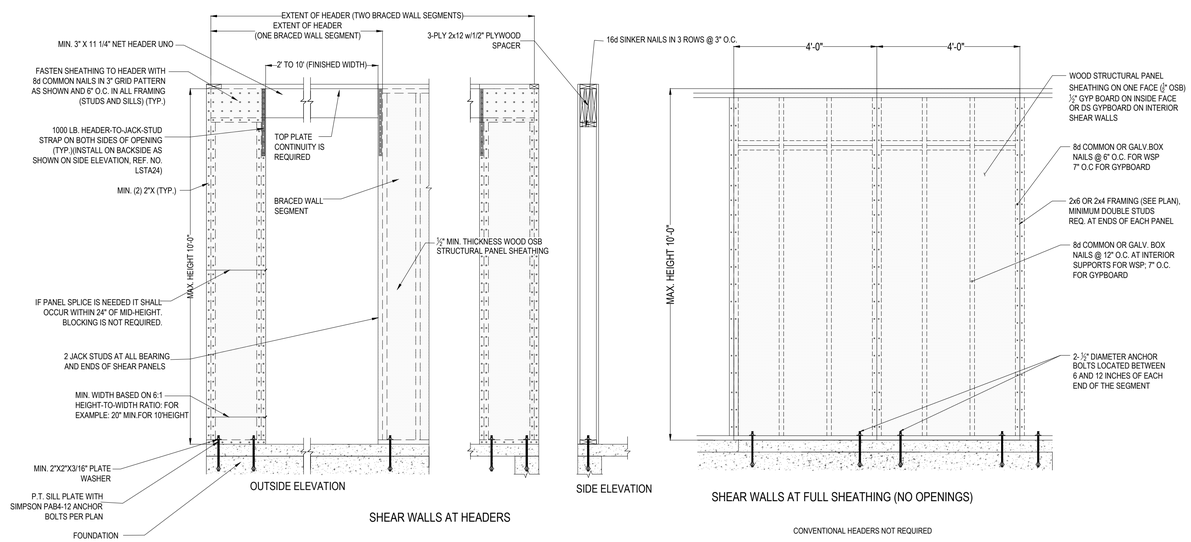

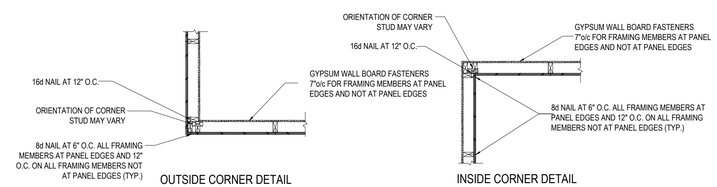

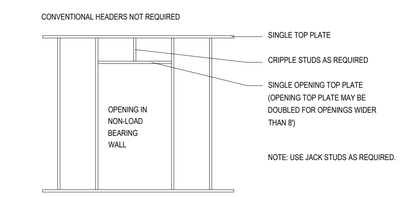

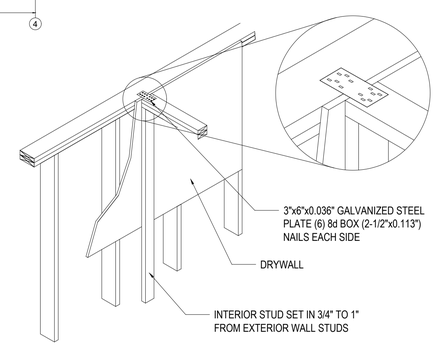

CONNECTION DETAIL FOR INTERIOR TO EXTERIOR SHEAR WALLS

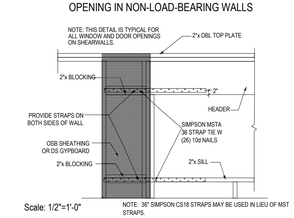

Scale: 1/2"=1'-0"

WINDOW & DOOR SHEARWALL DETAIL

2 TYPICAL STUD AND SHEAR WALL DETAILS

COMMONWEALTH OF VIRGINIA
DAVID R. HALL
Lic. No.15054
12/07/23
PROFESSIONAL ENGINEER

PLANS AND SPECIFICATIONS, COMMON LAW COPYRIGHT AND OTHER PROPERTY RIGHTS:
DRAWINGS AND SPECIFICATIONS AS INSTRUMENTS OF SERVICE ARE AND SHALL REMAIN THE PROPERTY OF THE ARCHITECT AND THE DESIGN PROFESSIONALS ASSOCIATED WITH THE PREPARATION THEREOF. THE DRAWINGS AND SPECIFICATIONS SHALL NOT BE USED BY ANY PERSON OR ENTITY FOR ANY PURPOSE OR PROJECT OTHER THAN THE PROJECT FOR WHICH THEY WERE PREPARED, UNLESS SPECIFICALLY ADMITTED BY THE ARCHITECT. THE ARCHITECT HAS ADOPTED THE DRAWINGS AND SPECIFICATIONS AS BEING SUITABLE FOR THE PROJECT. ANY OTHER USE OR REUSE IS AT THE SOLE RISK OF THE OWNER AND/OR PERSON OR ENTITY MAKING SUCH USE OR REUSE. THE ARCHITECT MAKES NO REPRESENTATIONS AND HAS NO LIABILITY FOR ANY USE OR REUSE OF THE DRAWINGS AND SPECIFICATIONS WITHOUT WRITTEN VERIFICATION, ADAPTATION AND OTHER PROFESSIONAL SERVICES FROM THE ARCHITECT. ANY VERIFICATION, ADAPTATION OR OTHER PROFESSIONAL SERVICES FROM THE ARCHITECT MAY BE CONSIDERED THE BASIS FOR ADDITIONAL COMPENSATION.
VERIFY AND FIELD VERIFY ALL DIMENSIONS AND CONDITIONS AS INSTALLED PRIOR TO PROCEEDING WITH THE WORK. REPORT ANY ERRORS, OMISSIONS OR INCONSISTENCIES IMMEDIATELY TO OWNER'S PROJECT MANAGER FOR ANY VARIANCE BETWEEN PLAN AND ACTUAL CONDITIONS.
REGARDLESS OF PRIOR PLAN SUBMITTAL, ALL PRIOR AGENCY APPROVALS, THE ARCHITECT'S COPYRIGHT RESTRICTIONS OF AND OTHER PROPERTY RIGHTS IN THE DRAWINGS AND SPECIFICATIONS MUST BE ADDRESSED BY THE OWNER PRIOR TO ANY CONSTRUCTION, FABRICATION OR OTHER USE OF THE DRAWINGS AND SPECIFICATIONS. ALL ORIGINAL SIGNATURE AND SEAL DOCUMENTS ARE THE PROPERTY OF THE ARCHITECT AND ARE TO BE RETURNED UPON REQUEST.

No.	Date	Issue Notes	Revision Notes	Zone	Appr.
1	12/07/2023	permit subm			
2	01/03/24	RELEASE FOR BID			

Drawn by	DRH
Checked by	DRH
Reviewed by	DRH
Approved by	DRH
Project No.	2230393.00
Drawing Date	12/07/2023
Drawing Scale	AS SHOWN
Drawing Title	DRH STRUCTURAL PLANS
Project Manager	DAVID R. HALL, P.E.

Design Firm
NORMAN SMITH ARCHITECTURE
1347 H Street, Washington, DC 20002-4906
3637 Slate Mills Road, Spenryville, VA 22740
T 202.462.5886 www.normansmitharchitecture.com

Consultant
DRH ENGINEERS, PLC
CIVIL, STRUCTURAL, FORENSIC
2310 Brandon Lane, Suite 100, Warrenton, VA 20186
540.347.8100 www.drhengineers.com

Culpeper County
Community Pool Project
16388 Competition Drive
Culpeper, VA

Sheet Title
STRUCTURAL PLAN & DETAILS
BRACE WALL PLAN-CALCS-DETAILS

Project No.

Scale
AS SHOWN

Sheet No.
S103
of

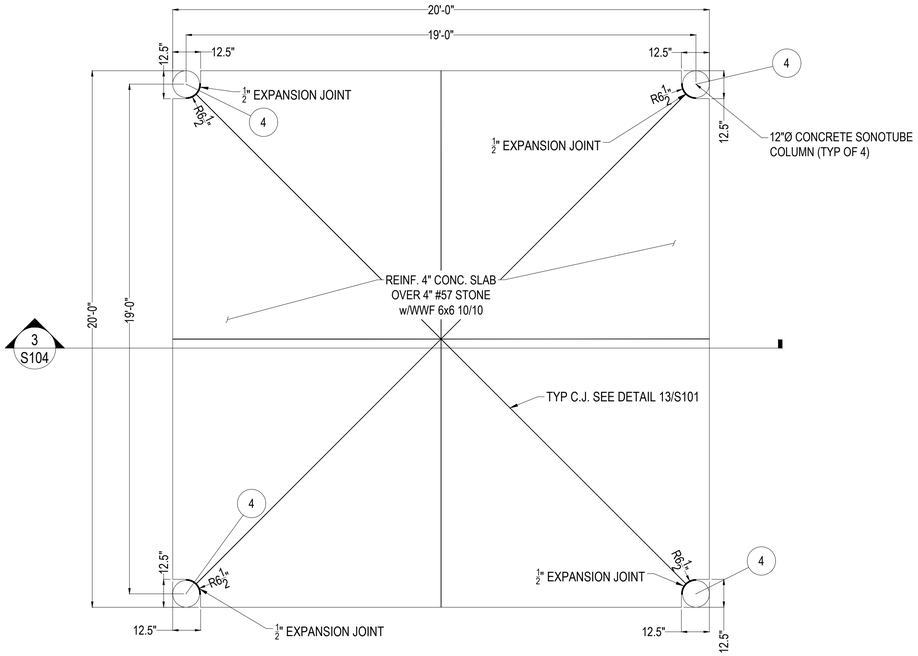

1 PAVILION FOUNDATION PLAN
Scale: 3/8"=1-0"

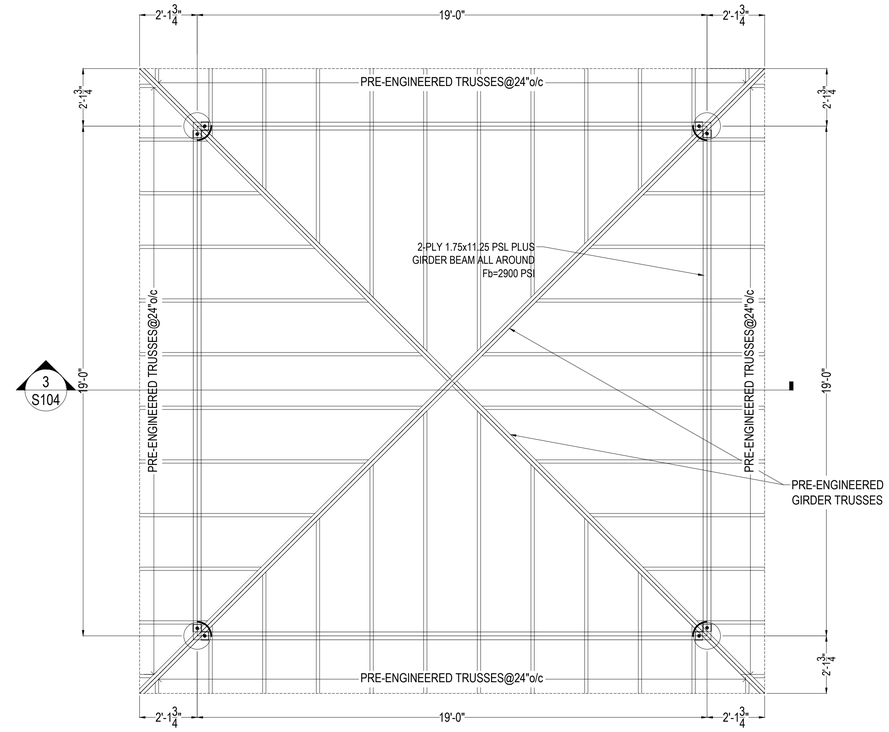

2 PAVILION ROOF FRAMING PLAN
Scale: 3/8"=1-0"

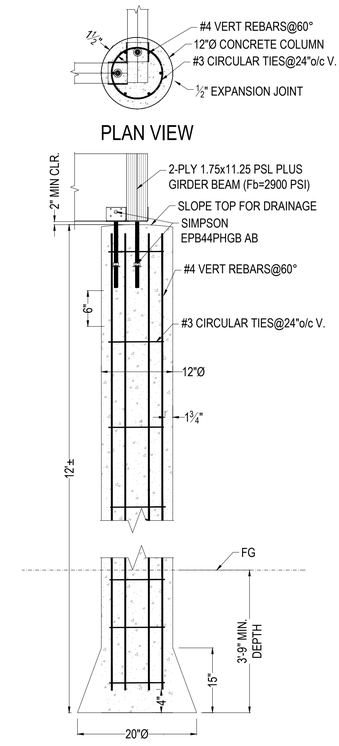

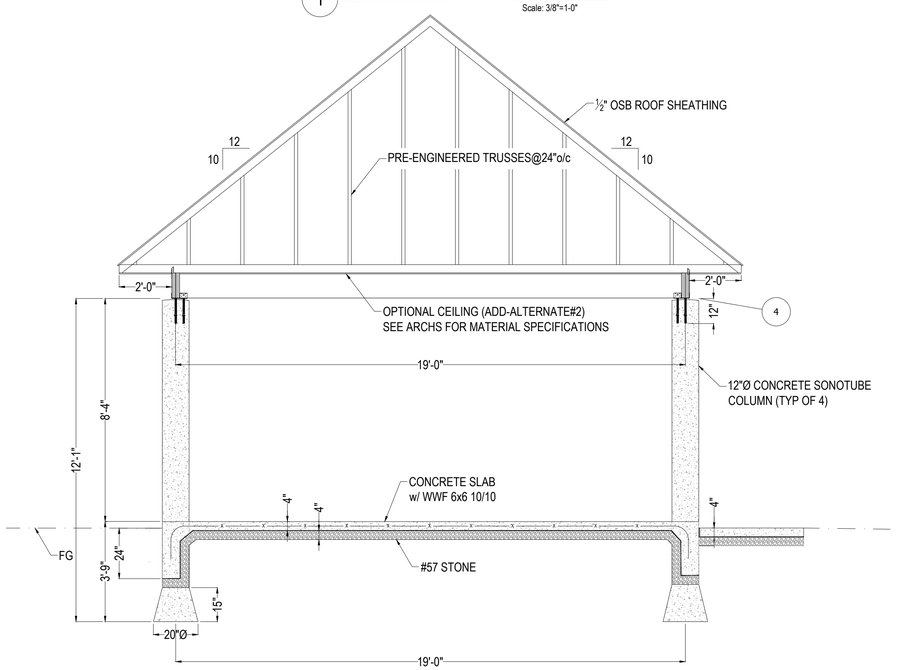

3 PAVILION SECTION VIEW
Scale: 3/8"=1-0"

4 CONC. COL. REINF DETAIL
Scale: 1"=1-0"

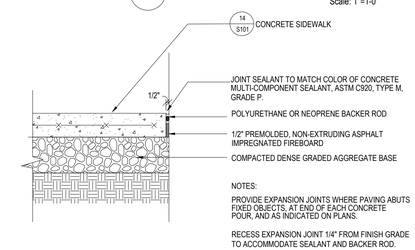

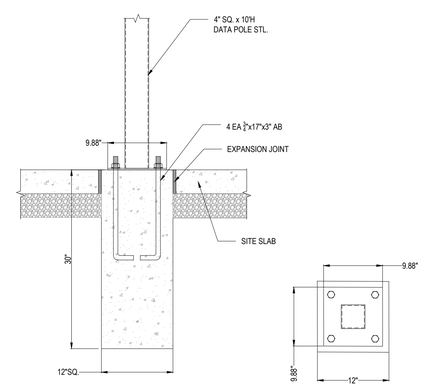

7 DATA POLE FOOTER DETAIL
Scale: 1"=1-0"

5 EXPANSION JOINT IN CONC. SIDEWALK
Scale: 1"=1-0"

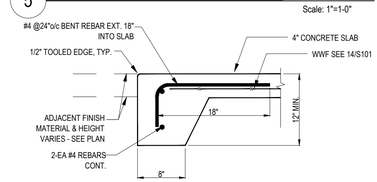

6 SITE SLAB EDGE TURNDOWN DETAIL
Scale: 1"=1-0"

COMMONWEALTH OF VIRGINIA
DAVID R. HALL
Lic. No.15054
12/07/23
PROFESSIONAL ENGINEER

No.	Date	Revision	Issue Notes
1	12/7/2023	permit subm	
2	01/03/24	RELEASE FOR BID	

Drawn By: DRH
Checked By: DRH
Reviewed By: DRH
Approved By: DRH
Date: 12/07/2023
Project #: 23703-culpeper (DRH# 2230393.00)
Drawing Code: Drawing Code
CAD File Name: DRH STRUCTURAL PLANS
Plot Date: 00/00/00

Design Firm: NORMAN SMITH ARCHITECTURE
1341 H Street, Washington, DC 20002-4906
3637 Slate Mills Road, Sperryville, VA 22740
T 202.462.5886 www.normansmitharchitecture.com

Consultant: DRH ENGINEERS, PLC
CIVIL | STRUCTURAL | FORENSIC
2100 Gallows Lane, Suite 100, Winnetka, VA 22182
T 703.573.8000 www.drhengineers.com

Culpeper County Community Pool Project
16388 Competition Drive
Culpeper, VA

Sheet Title: STRUCTURAL PLAN & DETAILS
PAVILION FOUNDATION & FRAMING PLAN

Scale: AS SHOWN

Sheet No.: S104
of

DRAWINGS AND SPECIFICATIONS AS INSTRUMENTS OF SERVICE IS THE PROPERTY OF THE ARCHITECT AND THE ARCHITECT HAS THE COPYRIGHT TO THE DRAWINGS AND SPECIFICATIONS. THE DRAWINGS AND SPECIFICATIONS MAY BE USED BY OWNER FOR INFORMATION AND REFERENCE IN CONNECTION WITH THE OWNER'S USE AND OCCUPANCY OF THE PROJECT. THE DRAWINGS AND SPECIFICATIONS MAY NOT BE REPRODUCED OR ASSIGNED TO ANY THIRD PARTY WITHOUT THE WRITTEN CONSENT OF THE ARCHITECT.

DRAWINGS AND SPECIFICATIONS PREPARED FOR THIS PROJECT BY THE ARCHITECT INCLUDE ELECTRONIC FORMAT INFORMATION WHICH IS INTENDED TO BE A TRUE AND ACCURATE COPY OF THE INFORMATION SHOWN ON THE PRINTED DRAWINGS AND SPECIFICATIONS. ALTERATIONS TO THE ELECTRONIC FORMAT INFORMATION MAY BE MADE FOR THE CONVENIENCE OF THE OWNER AND CONTRACTORS. ARCHITECT DOES NOT WARRANT THE ACCURACY OF THE ELECTRONIC FORMAT INFORMATION AND ANY USE OF THE ELECTRONIC FORMAT INFORMATION IS AT THE RECIPIENT'S SOLE RISK AND WITHOUT LIABILITY OR LEGAL EXPOSURE TO ARCHITECT. THE RECIPIENT SHALL INDEMNIFY AND HOLD HARMLESS ARCHITECT FROM ALL CLAIMS, DAMAGES, LOSSES, AND EXPENSES ARISING OUT OF OR RESULTING THEREFROM.

VERIFY ALL EXISTING AND FIELD CONDITIONS PRIOR TO CONSTRUCTION. NOTIFY ARCHITECT OF ANY VARIANCE BETWEEN ACTUAL AND DRAWINGS.

IF THERE EXISTS AN ISSUE TO AGREE ON PRIOR TO BEGINNING WORK, THE ARCHITECT'S DECISION SHALL BE FINAL. IF THERE IS ANY DISCREPANCY BETWEEN THE DRAWINGS AND SPECIFICATIONS, THE ARCHITECT'S DECISION SHALL BE FINAL.

BEGINNING OF WORK INDICATES THAT THE CONTRACTOR HAS FOUND THE SITE CONDITIONS TO BE SATISFACTORY AND ACCEPTS THE DRAWINGS AS ADEQUATE AND COMPLETE.

DO NOT SCALE DRAWINGS.

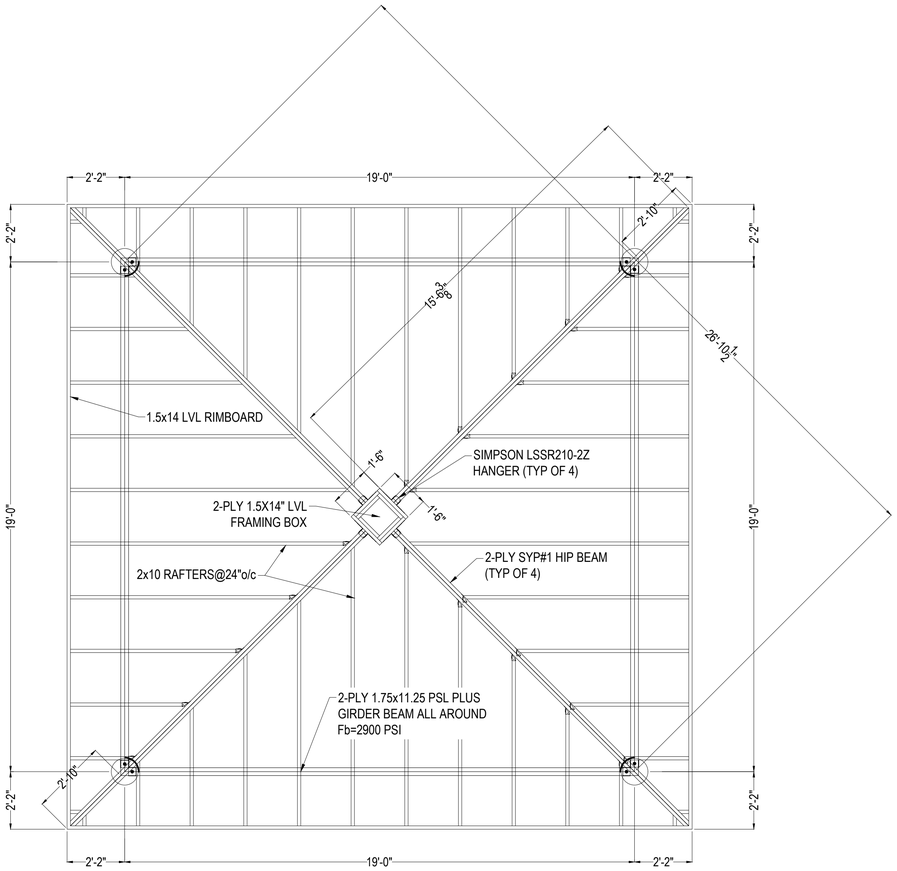

1 PAVILION OPTIONAL ROOF FRAMING PLAN (ADD-ALTERNATE #3)

Scale: 3/8"=1'-0"

COMMONWEALTH OF VIRGINIA
DAVID R. HALL
Lic. No.15054
12/07/23
PROFESSIONAL ENGINEER

PLEASE READ BEFORE OPENING ELECTRONIC FILES OR PRINTING PRINTED DRAWINGS AND SPECIFICATIONS FROM ELECTRONIC FILES:
THIS DOCUMENT, INCLUDING DRAWINGS AND SPECIFICATIONS, IS AN INSTRUMENT OF PROFESSIONAL SERVICE. THE DRAWINGS AND SPECIFICATIONS ARE THE PROPERTY OF THE ARCHITECT AND MUST BE RETURNED UPON REQUEST. THE DRAWINGS AND SPECIFICATIONS ARE TO BE USED ONLY FOR THIS SITE AND PROJECT AND NOT TO BE LOANED, COPIED OR REPRODUCED IN WHOLE OR IN PART FOR USE ON ANY OTHER SITE OR PROJECT WITHOUT WRITTEN PERMISSION OF THE ARCHITECT. THE ARCHITECT WILL NOT BE RESPONSIBLE FOR ANY ALTERATIONS MADE TO THE DOCUMENTS THAT ARE MADE BY OTHERS WITHOUT THE ARCHITECT'S WRITTEN CONSENT. ALL REPRODUCTIONS OF THE DOCUMENTS MUST BEAR THE ARCHITECT'S COPYRIGHT NOTICE.

IF THESE PLANS ARE USED TO ASSIST IN REPORT PREPARATION, THE PLAN STAMP, SEAL OR CERTIFICATION, IS A COVERAGE AND NO WARRANTY OF THE ACCURACY OF THE INFORMATION CONTAINED IN THE REPORT. THE ARCHITECT WILL NOT BE RESPONSIBLE FOR ANY ALTERATIONS MADE TO THE DOCUMENTS THAT ARE MADE BY OTHERS WITHOUT THE ARCHITECT'S WRITTEN CONSENT. ALL REPRODUCTIONS OF THE DOCUMENTS MUST BEAR THE ARCHITECT'S COPYRIGHT NOTICE.

USE OF ANY ATTACHED CAD DRAWING FILES SHALL NOT RELIEVE OR DIMINISH THE CONTRACTOR AND/OR SUBCONTRACTOR FROM THEIR RESPONSIBILITY TO VERIFY ALL DIMENSIONS AND FIELD CONDITIONS PRIOR TO CONSTRUCTION. THE ARCHITECT WILL NOT BE RESPONSIBLE FOR ANY ALTERATIONS MADE TO THE DOCUMENTS THAT ARE MADE BY OTHERS WITHOUT THE ARCHITECT'S WRITTEN CONSENT.

DRAWINGS AND SPECIFICATIONS ARE TO BE USED ONLY FOR THIS SITE AND PROJECT AND NOT TO BE LOANED, COPIED OR REPRODUCED IN WHOLE OR IN PART FOR USE ON ANY OTHER SITE OR PROJECT WITHOUT WRITTEN PERMISSION OF THE ARCHITECT. THE ARCHITECT WILL NOT BE RESPONSIBLE FOR ANY ALTERATIONS MADE TO THE DOCUMENTS THAT ARE MADE BY OTHERS WITHOUT THE ARCHITECT'S WRITTEN CONSENT. ALL REPRODUCTIONS OF THE DOCUMENTS MUST BEAR THE ARCHITECT'S COPYRIGHT NOTICE.

No.	Date	Issue Notes
1	12/7/2023	permit subm
2	01/03/24	RELEASE FOR BID

No.	Date	Revision Notes	Zone	Appr

Drawn By: DRH
Date: 12/07/2023
Checked By: DRH
Revision:
Checked By: DRH
Project #: 23703.culpeper
2023-02 2230393.00
Reviewed By: DRH
Drawing Code: S
Submitted By: DRH
CAD File Name: DRH STRUCTURAL PLANS
Prepared by: DRH
Plot Date: 00/00/00
DAVID R. HALL, P.E.

Design Firm
NORMAN SMITH ARCHITECTURE
1341 H Street, Washington, DC 20002-4906
3537 Slate Mills Road, Sperryville, VA 22740
T 202.462.5886 www.normansmitharchitecture.com

Consultant
DRH ENGINEERS, PLC
CIVIL STRUCTURAL FORENSIC
2120 Brewster Lane, Suite 100, Warrenton, VA 20187
540-347-8700 www.drhengineers.com

Culpeper County
Community Pool Project
16388 Competition Drive
Culpeper, VA

Sheet Title
STRUCTURAL PLAN & DETAILS
PAVILION OPTIONAL ROOF FRAMING PLAN

Scale
AS SHOWN

Sheet No.
S104.1
of

K:\223 STRUCT PROJECTS\2230393 - Norman Smith Arch - SE Svcs-Culpeper Co Comm Pool\DRH-STRUCTURAL PLANS.dwg, 1/10/2024 6:24:02 PM, _AutoCAD PDF (High Quality Print).pc3

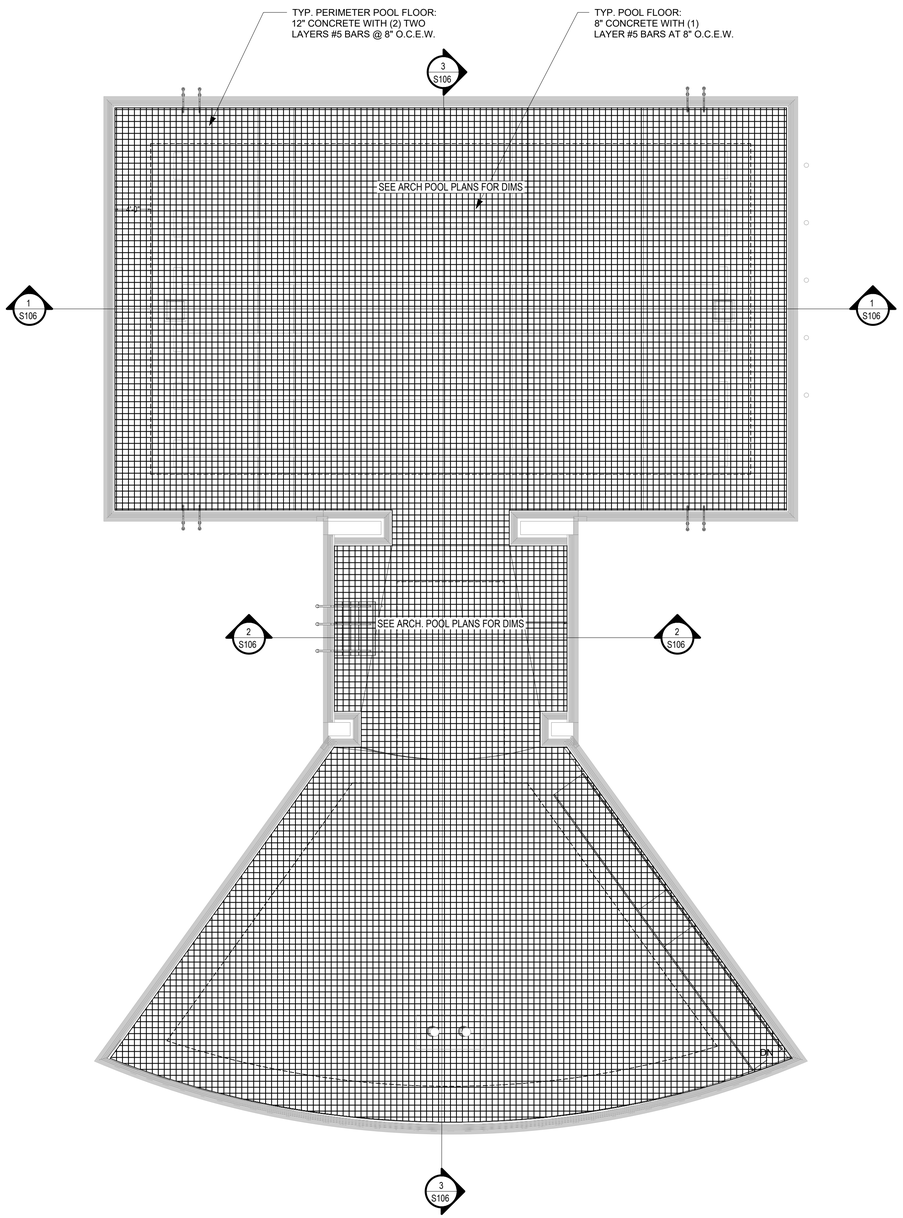

1 POOL SLAB REINFORCING PLAN
1/8" = 1'-0"

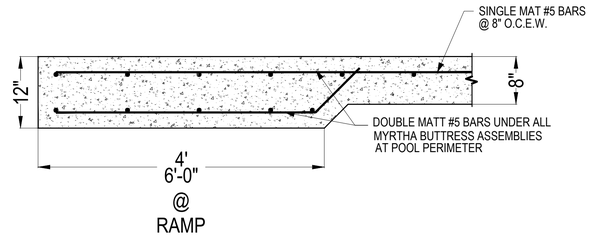

2 POOL SLAB REINFORCING PLAN @ WALLS
1/8" = 1'-0"

NOTE:
SEE POOL ARCH PLANS
FOR DETAILS

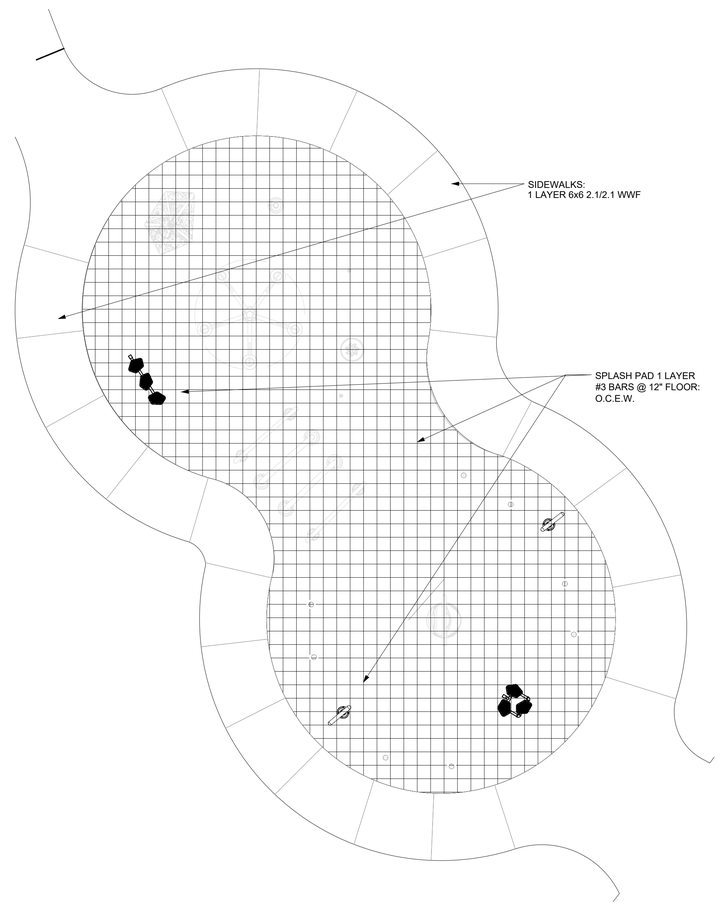

3 SPLASH PAD SLAB REINFORCING PLAN
3/16" = 1'-0"

NOTE:
SEE SHEET AP106 FOR GENERAL
REINFORCING NOTES.

COMMONWEALTH OF VIRGINIA
DAVID R. HALL
Lic. No.15054
12/07/23
PROFESSIONAL ENGINEER

PLANS AND SPECIFICATIONS, ELECTRONIC FILES AND HARDCOPY DRAWINGS AND SPECIFICATIONS AND THE IDEAS, DESIGNS AND PLANS INDICATED OR REPRESENTED BY THIS DRAWING ARE THE PROPERTY OF THE ARCHITECT AND SHALL NOT BE USED BY ANY PERSON FOR ANY PURPOSE OTHER THAN THE PERFORMANCE OF WORK UNDER THIS PROJECT. THEY ARE NOT TO BE LOANED, COPIED OR REPRODUCED IN WHOLE OR IN PART, NOR ARE THEY TO BE ASSIGNED TO ANY THIRD PERSON WITHOUT THE PRIOR WRITTEN CONSENT OF THE ARCHITECT. ANY LEGEND PROVIDED ELECTRONICALLY IS INTENDED AS A GENERAL GUIDE ONLY. THE ACCURACY OF THE ELECTRONIC FILE CANNOT BE ASSURED.

DRAWINGS AND DESIGNS ARE INSTRUMENTS OF SERVICE AND ARE THE PROPERTY OF THE ARCHITECT REGARDLESS OF THE PROPRIETARY CLAIM OF ANY PARTY TO THE CONTRACT BETWEEN THE ARCHITECT AND OWNER.

IF THERE IS A NEW USER IN THE FUTURE, THE ARCHITECT MUST BE VERIFIED THAT THEY ARE USING ALL OF THE CORRECT AND CURRENT DRAWINGS AND SPECIFICATIONS. THE ARCHITECT MUST BE NOTIFIED TO MODIFY THE DRAWINGS AND SPECIFICATIONS, ADDENDA, RFIS, CHANGE ORDERS AND OTHER MODIFICATIONS TO BE ACCURATE AND CURRENT. THE ARCHITECT MUST VERIFY ALL EXISTING CONDITIONS PRIOR TO CONSTRUCTION. THE ARCHITECT MUST BE NOTIFIED IMMEDIATELY OF ANY VARIANCE BETWEEN ACTUAL AND DRAWING DIMENSIONS.

No.	Date	Revision Notes	Zone	Appr

No.	Date	Issue Notes
1	12/7/2023	permit subm
2	01/03/24	RELEASE FOR BID

Drawn By: DRH
Checked By: DRH
Reviewed By: DRH
Submitted By: DRH
Project Manager: DAVID R. HALL, P.E.
Date: 12/07/2023
Revision:
Project No.: 2270.3 culpeper
Drawing Date: (REF # 2230393.00
Drawing Code
CAD File Name: DRH STRUCTURAL PLANS
Plot Date: 00/00/00

Design Firm
NORMAN SMITH ARCHITECTURE
1341 H Street, Washington, DC 20002-4906
3637 Slate Mills Road, Spencyville, VA 22740
T: 202.462.5686 www.normansmitharchitecture.com

Consultant
DRH ENGINEERS, PLC
CIVIL, STRUCTURAL, FORENSIC
2100 Brownsville Road, Suite 100 Warrenton, VA 20187
540.347.7100 www.drhengineers.com

Project Title:
Culpeper County
Community Pool Project
16388 Competition Drive
Culpeper, VA

Sheet Title:
STRUCTURAL PLAN & DETAILS
POOL & SPASH PAD SLAB PLAN

Scale: AS SHOWN

Sheet No.:
S105
of

K:\223 STRUCT PROJECTS\2230393 - Norman Smith Arch - SE Svcs-Culpeper Co Comm Pool\DRH-STRUCTURAL PLANS.dwg, 1/10/2024 6:23:35 PM, _AutoCAD PDF (High Quality Print).pc3

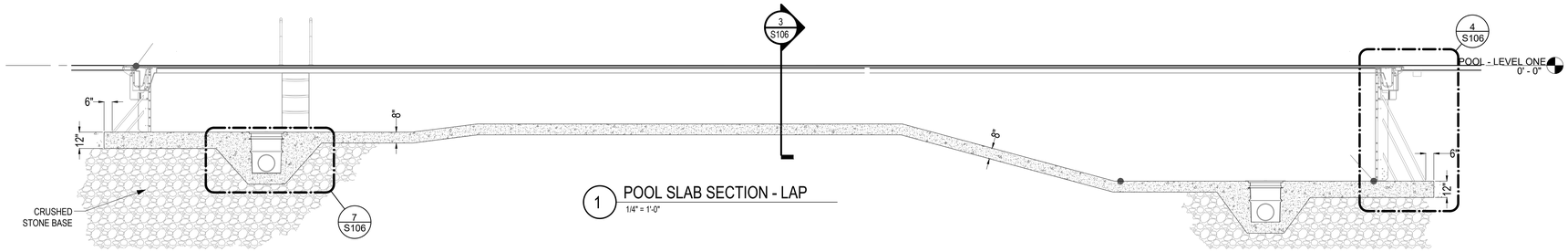

1 POOL SLAB SECTION - LAP
1/4" = 1'-0"

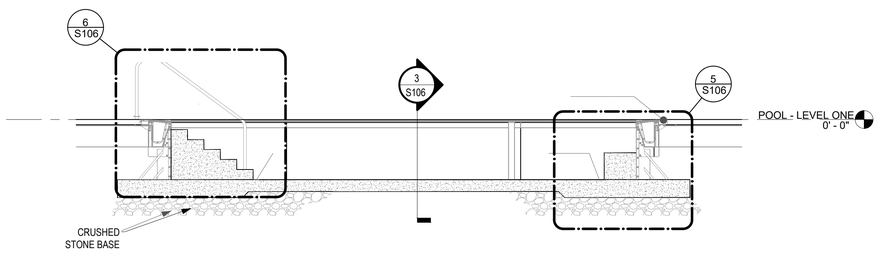

2 POOL SLAB SECTION - LEISURE
1/4" = 1'-0"

NOTE:
SEE ARCH POOL PLANS FOR REINFORCEMENT
DETAILS AND EXACT DIMENSIONS

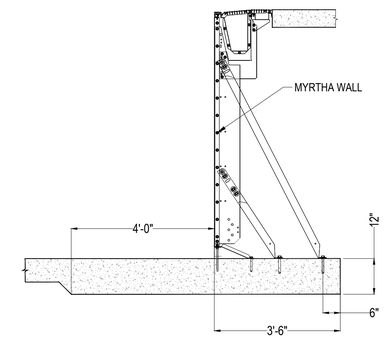

4 POOL SLAB DETAIL AT MYRTHA WALL
1/2" = 1'-0"

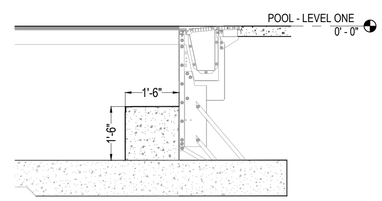

5 POOL SLAB / BENCH DETAIL
1/2" = 1'-0"

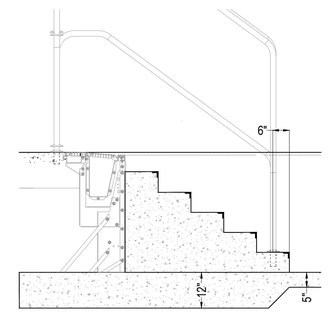

6 POOL SLAB / STAIR DETAIL
1/2" = 1'-0"

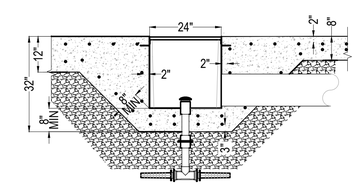

7 POOL SLAB @MAIN DRAIN DETAIL
1/2" = 1'-0"

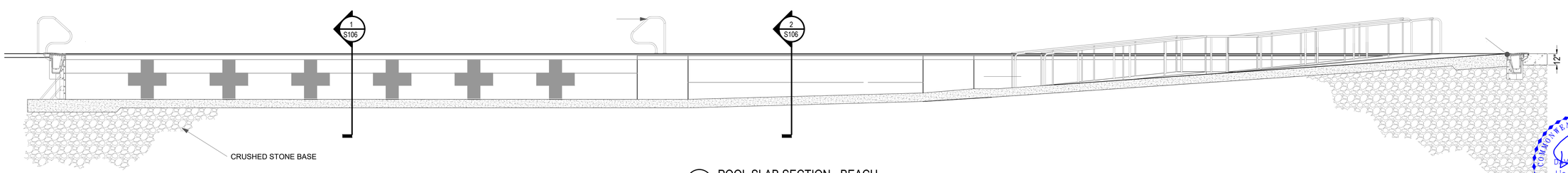

3 POOL SLAB SECTION - BEACH
1/4" = 1'-0"

COMMONWEALTH OF VIRGINIA
DAVID R. HALL
Lic. No.15054
12/07/23
PROFESSIONAL ENGINEER

PLEASE READ BEFORE APPLYING ELECTRONIC FILES & PRINT PROVIDED:
DRAWINGS AND SPECIFICATIONS ARE THE PROPERTY OF THE ARCHITECT AND ARE THE ARCHITECT'S INSTRUMENTS OF SERVICE THROUGH COMPLETION OF THE ARCHITECT'S PROFESSIONAL SERVICES. THEY ARE TO BE RETURNED UPON REQUEST AT THE COMPLETION OF THE PROJECT. THE ARCHITECT RETAINS ALL OF HIS RIGHTS AND REMEDIES AS THE ARCHITECT OF RECORD UNDER THE ARCHITECTURAL WORKS COPYRIGHT PROTECTION ACT (ACPA) AND OTHER APPLICABLE LAWS. THE ARCHITECT RETAINS OWNERSHIP OF THE ORIGINAL DRAWINGS AND SPECIFICATIONS, INCLUDING THE ELECTRONIC FILES, AND THE ARCHITECT'S CONSENT IS REQUIRED FOR THEIR REUSE OR REPRODUCTION. THE ARCHITECT'S CONSENT IS NOT REQUIRED FOR THE REUSE OR REPRODUCTION OF THE ARCHITECT'S DRAWINGS AND SPECIFICATIONS FOR OWNER'S OPERATION, MAINTENANCE, REPAIR, OR REMODELING OF THE PROJECT.
VERIFY THAT THEY ARE USEDIALL OF THE CORRECT AND CURRENT DRAWINGS AND SPECIFICATIONS. THE ARCHITECT ASSUMES NO RESPONSIBILITY FOR DOCUMENTS MODIFIED BY THE OWNER OR OTHERS.
CONTRACT BETWEEN THE OWNER AND THE CONTRACTOR. THE ARCHITECT IS NOT A PARTY TO THE CONTRACT BETWEEN THE OWNER AND THE CONTRACTOR.
VERIFY ALL EXISTING CONDITIONS, DIMENSIONS, AND QUANTITIES PRIOR TO CONSTRUCTION. THE ARCHITECT ASSUMES NO RESPONSIBILITY FOR CONDITIONS, DIMENSIONS, QUANTITIES, SPECIFICATIONS, AGENDAS, BIDS, CHANGE ORDERS AND OTHER DOCUMENTS OR ACTIVITIES NOT PRODUCED BY THE ARCHITECT OR THE ARCHITECT'S CONSULTANTS.
IF THESE FILES ARE USED TO ASSIST IN SHOP DRAWING PREPARATION, THE FILE IS THAT OF THE CONTRACTOR, AND NO REPRESENTATION OF ACCURACY OF THE DRAWINGS OR DATA CONTAINED IN THE FILES IS MADE BY THE ARCHITECT. THE CONTRACTOR MUST VERIFY ALL DATA CONTAINED IN THE FILES PRIOR TO ITS USE. THE CONTRACTOR ASSUMES ALL RISK AND LIABILITY FOR THE USE OF ANY FILE(S) OR DATA CONTAINED IN THE FILES.
IF THE CONTRACTOR OR OTHERS ELECTRONICALLY MODIFY THE ARCHITECT'S DRAWINGS OR SPECIFICATIONS, THE ARCHITECT'S SEAL AND COPYRIGHT NOTICE MUST BE REMOVED FROM ALL SUCH MODIFIED DOCUMENTS. THE ARCHITECT ASSUMES NO RESPONSIBILITY FOR ANY MODIFICATIONS MADE BY THE CONTRACTOR OR OTHERS TO THE ARCHITECT'S DRAWINGS OR SPECIFICATIONS.
RECORD SET PLANS PLEASE DONOTUSE, AS AN AIDE, ACCURATE AS POSSIBLE, THE ARCHITECT'S COPYRIGHT RESTRICTIONS AT THE ARCHITECT'S OFFICE. THE ARCHITECT ASSUMES NO RESPONSIBILITY FOR ANY VARIANCE BETWEEN ACTUAL AND DRAWINGS.

No.	Date	Revision Notes	Zone	Appr

No.	Date	Issue Notes
1	12/7/2023	permit subm
2	01/03/24	RELEASE FOR BID

Drawn By: DRH
Checked By: DRH
Reviewed By: DRH
Approved By: DRH
Date: 12/07/2023
Revision:
Project #: 23703-culpeper
Drawing Code: Drawing Code
CAD File Name: DRH STRUCTURAL PLANS
Plot Date: 00/00/00

Design Firm:
NORMAN SMITH ARCHITECTURE
1341 H Street, Washington, DC 20002-4906
3637 Slate Mills Road, Sperryville, VA 22740
T 202.462.5886 www.normansmitharchitecture.com

Consultant:
DRH ENGINEERS, PLC
CIVIL, STRUCTURAL, FORENSIC
2100 Ironwood Lane, Suite 110, Warrenton, VA 20187
540.347.8300 www.drhengineers.com

Principal in Charge: DAVID R. HALL, P.E.

Project Title: Culpeper County
Community Pool Project
16388 Competition Drive
Culpeper, VA

Sheet Title: STRUCTURAL PLAN & DETAILS
POOL SECTIONS

Scale: AS SHOWN

Sheet No.: S106
of

K:\223 STRUCT PROJECTS\2230393 - Norman Smith Arch - SE Svcs-Culpeper Co Comm Pool\DRH-STRUCTURAL PLANS.dwg, 1/10/2024 6:24:13 PM, _AutoCAD PDF (High Quality Print).pc3

MECHANICAL LEGEND

ALL SYMBOLS INDICATED MAY NOT APPEAR ON THESE CONTRACT DRAWINGS

GENERAL

- EXISTING
- EXISTING TO BE REMOVED
- ITEM TO BE PROVIDED
- "DEMOLITION TO THIS POINT" SYMBOL
- "NEW CONSTRUCTION AT THIS POINT" SYMBOL

DUCTWORK AND ACCESSORIES

- E 75 — REGISTER/GRILLE/DIFFUSER (MARK/CFM)
- - 75 — EXISTING REGISTER/GRILLE/DIFFUSER (CFM SHOWN)
- SUPPLY DIFFUSER 4-WAY
- SUPPLY DIFFUSER 3-WAY
- SUPPLY DIFFUSER 2-WAY
- SUPPLY DIFFUSER 2-WAY CORNER
- SUPPLY DIFFUSER 1-WAY
- SUPPLY GRILLE OR REGISTER
- RETURN GRILLE
- EXHAUST GRILLE
- F — HORIZONTAL FIRE DAMPER
- F — VERTICAL FIRE DAMPER
- F/SD — HORIZONTAL FIRE AND SMOKE DAMPER
- F/SD — VERTICAL FIRE AND SMOKE DAMPER
- SD — HORIZONTAL SMOKE DAMPER
- SD — VERTICAL SMOKE DAMPER
- VOLUME DAMPER
- R — VOLUME DAMPER W/ REMOTE DAMPER OPERATOR
- M — MOTOR OPERATED DAMPER
- OUTSIDE AIR DUCT (NEGATIVE PRESSURE)
- SUPPLY DUCT SECTION (POSITIVE PRESSURE)
- RETURN DUCT SECTION (NEGATIVE PRESSURE)
- EXHAUST DUCT SECTION (NEGATIVE PRESSURE)
- FLEXIBLE DUCT
- 22x14 — DUCT SIZE (INCHES), FIRST FIGURE IS SIDE SHOWN
- 12ø — ROUND DUCT SIZE (INCHES)
- 24x12ø — OVAL DUCT SIZE (INCHES), FIRST FIGURE IS SIDE SHOWN
- DN — CHANGE OF ELEVATION-RISE (UP)-DROP (DN)
- AFS — AIR FLOW STATION
- VAV BOX WITH HOT WATER COIL
- R — RADIANT CEILING PANEL
- AD — ACCESS DOOR, VERTICAL OR HORIZONTAL
- DS — DOOR SWEEP AND ASTRAGAL ASSEMBLY
- DG — DOOR GRILLE
- UC — DOOR UNDERCUT

CONTROLS

- T — ELECTRONIC THERMOSTAT (MOUNT TOP OF DEVICE AT 48" AFF)
- T — PNEUMATIC THERMOSTAT (MOUNT TOP OF DEVICE AT 48" AFF)
- H — HUMIDITY SENSOR (MOUNT TOP OF DEVICE AT 48" AFF)
- SD — SMOKE DETECTOR
- SP — STATIC PRESSURE SENSOR
- NO2 — NITROGEN DIOXIDE SENSOR
- CO — CARBON MONOXIDE SENSOR
- CO2 — CARBON DIOXIDE SENSOR
- PM — PRESSURE MONITOR
- PS — PRESSURE SWITCH
- FS — FLOW SWITCH

PIPING

- DOMESTIC COLD WATER
- A — COMPRESSED AIR
- BBD — BOILER BLOW DOWN
- CD — CONDENSATE DRAIN
- CR — CONDENSER WATER RETURN
- CS — CONDENSER WATER SUPPLY
- CWR — CHILLED WATER RETURN
- CWS — CHILLED WATER SUPPLY
- FOR — FUEL OIL RETURN
- FOS — FUEL OIL SUCTION
- FOV — FUEL OIL TANK VENT
- G — NATURAL GAS
- HPC — HIGH PRESSURE CONDENSATE
- HPS — HIGH PRESSURE STEAM
- HWR — HEATING WATER RETURN
- HWS — HEATING WATER SUPPLY
- LPC — LOW PRESSURE CONDENSATE
- LPG — LIQUEFIED PETROLEUM GAS (PROPANE)
- LPS — LOW PRESSURE STEAM
- MPC — MEDIUM PRESSURE CONDENSATE
- MPS — MEDIUM PRESSURE STEAM
- PC — PUMPED CONDENSATE
- RL — REFRIGERANT LIQUID
- RS — REFRIGERANT SUCTION
- STM — STEAM
- SW — SOFT WATER

PIPE FITTINGS

- PIPE CAP
- PIPE TURNING UP
- PIPE TURNING DOWN
- TEE AND ELBOW UP
- TEE AND ELBOW DOWN
- TEE UP
- TEE DOWN
- UNION
- CONCENTRIC PIPE REDUCER/INCREASER
- ECCENTRIC PIPE REDUCER/INCREASER

VALVES AND PIPING SPECIALTIES

- ANGLE GATE VALVE
- ANGLE GLOBE VALVE
- PRESSURE RELIEF/SAFETY VALVE
- AUTOFLOW CONTROL VALVE
- CIRCUIT SETTER
- BALL VALVE
- BUTTERFLY VALVE
- GATE VALVE
- GLOBE VALVE
- NEEDLE VALVE
- PRESSURE REDUCING VALVE
- THREE WAY CONTROL VALVE
- THREE WAY VALVE
- TWO WAY CONTROL VALVE
- S — SOLENOID VALVE
- FLOW METER
- TRIPLE DUTY VALVE
- GAS COCK
- SWING GATE CHECK VALVE
- SPRING CHECK VALVE
- FLOW ORIFICE
- STRAINER
- STRAINER WITH BLOWDOWN
- PRESSURE GAUGE WITH GAUGE COCK
- THERMOMETER
- AAV — AUTOMATIC AIR VENT
- MAV — MANUAL AIR VENT
- SUCTION DIFFUSER

MPE DESIGN SUMMARY

PROJECT INFORMATION

PROJECT NAME:	CULPEPER COMMUNITY POOL
ADDRESS:	16388 COMPETITION DRIVE CULPEPER, VA
PROPOSED USE:	ASSEMBLY GROUP A-5
OWNER:	CULPEPER COUNTY
OWNER CONTACT:	ANDREW HARDY
VE PROJ NO.:	12992-9

APPLICABLE CODES

BUILDING CODE:	VIRGINIA CONSTRUCTION CODE: 2018
MECHANICAL CODE:	VIRGINIA MECHANICAL CODE: 2018
PLUMBING CODE:	VIRGINIA PLUMBING CODE: 2018
ELECTRICAL CODE:	NFPA 70 NATIONAL ELECTRICAL CODE: 2017
FIRE ALARM CODE:	VIRGINIA STATEWIDE FIRE PREVENTION CODE: 2018
LIFE SAFETY CODE:	NFPA 101 LIFE SAFETY CODE: 2018
ACCESSIBILITY CODE:	ICC/ANSI A117.1 STANDARDS ON ACCESSIBLE AND USABLE BUILDING AND FACILITIES: 2009
ENERGY CODE:	ASHRAE/IESNA 90.1-2016 ENERGY STANDARD FOR BUILDINGS EXCEPT LOW-RISE RESIDENTIAL BUILDINGS
	VIRGINIA ENERGY CONSERVATION CODE: 2018
GAS CODE:	VIRGINIA FUEL GAS CODE: 2018
POOL CODE:	VIRGINIA SWIMMING POOL AND SPA CODE: 2018

PROJECT TEAM

PROJECT MANAGER:	JASON DAMICO
PROJECT TEAM:	
MECHANICAL ENGINEER	CHRIS PERRIN
PLUMBING ENGINEER	MATT SHOCKEY
ELECTRICAL ENGINEER	JASON DAMICO
REVIT/CAD PROJECT LEAD	TIM HOUSDEN

DRAWING LIST

4

M000.1	MECHANICAL LEGENDS
M000.2	MECHANICAL ABBREVIATIONS AND NOTES
M000.3	MECHANICAL SPECIFICATIONS
M000.4	MECHANICAL SPECIFICATIONS
M000.5	MECHANICAL SPECIFICATIONS
M000.6	MECHANICAL SPECIFICATIONS
M000.9	MECHANICAL SCHEDULES
M000.10	MECHANICAL SCHEDULES
M000.11	MECHANICAL SCHEDULES
M100.0	MECHANICAL OVERALL PLAN
M100.1	MECHANICAL DUCTWORK PLAN - AREA 'A'
M100.2	MECHANICAL DUCTWORK PLAN - AREA 'B'
M100.3	MECHANICAL DUCTWORK PLAN - AREA 'C'
M200.1	MECHANICAL PIPING PLAN - AREA 'A'
M200.2	MECHANICAL PIPING PLAN - AREA 'B'
M200.3	MECHANICAL PIPING PLAN - AREA 'C'
M500.1	MECHANICAL DETAILS
M500.2	MECHANICAL DETAILS
M500.3	MECHANICAL DETAILS
M500.4	MECHANICAL DETAILS

COMMONWEALTH OF VIRGINIA
PHILLIP L. GENTRY
Lic. No. 025757
03/29/2024
PROFESSIONAL ENGINEER

PLEASE READ BEFORE OPENING ELECTRONIC FILES: WORD PROVIDED.

DRAWINGS AND DESIGN © 2023 NORMAN SMITH ARCHITECTURE.
DRAWINGS AND SPECIFICATIONS AND THE IDEAS DESIGNS AND ARRANGEMENTS REPRESENTED THEREIN ARE THE EXCLUSIVE PROPERTY OF THE ARCHITECT AND PROFESSIONAL ENGINEERS AND WERE PREPARED FOR THE PROJECT SPECIFIED HEREIN. THEY ARE NOT TO BE USED BY ANYONE FOR OTHER PROJECTS, OR ON EXTENSIONS OF THIS PROJECT, EXCEPT BY AGREEMENT IN WRITING AND WITH APPROPRIATE COMPENSATION TO THE ARCHITECT AND PROFESSIONAL ENGINEERS. ALL REPRODUCTIONS, IN WHOLE OR IN PART, MUST BEAR A REPRODUCTION OF THIS NOTICE.

DRAWINGS AND SPECIFICATIONS ARE INSTRUMENTS OF SERVICE THROUGH THE COMPLETION OF THE PROJECT AS DEFINED BY THE OWNER-ARCHITECT AGREEMENT. THEY ARE NOT TO BE USED BY THE OWNER OR OTHERS FOR ANY PURPOSE OR PROJECT OTHER THAN THE PROJECT SPECIFIED HEREIN, EXCEPT BY AGREEMENT IN WRITING AND WITH APPROPRIATE COMPENSATION TO THE ARCHITECT AND PROFESSIONAL ENGINEERS.

IF THERE EXISTS ANY CONFLICT BETWEEN THE DRAWINGS AND SPECIFICATIONS, THE ARCHITECT SHALL BE OFFICIALLY NOTIFIED IMMEDIATELY. IN THE ABSENCE OF SUCH NOTIFICATION, THE ARCHITECT WILL ASSUME THAT THE CONTRACTOR HAS ALREADY ADJUSTED THE PRICE TO COVER THE MORE EXPENSIVE ALTERNATIVE.

DO NOT SCALE DRAWINGS. DIMENSIONS MARKED "VERIFY" OR "V" REQUIRE FIELD VERIFICATION BEFORE CONTINUING WORK. DIMENSIONS MARKED "NO" OR "NO" ARE TO BE ACHIEVED WITHOUT ADJUSTMENT. DIMENSIONS MARKED "FIXED" OR "F" ARE NOT TO BE ADJUSTED WITHOUT PRIOR APPROVAL OF THE ARCHITECT.

VERIFY ALL EXISTING CONDITIONS AND DIMENSIONS AFFECTING THE WORK IN THE FIELD BEFORE COMMENCING WORK. REPORT ANY DISCREPANCIES TO THE ARCHITECT. DO NOT PROCEED WITHOUT OWNER'S PROJECT MANAGER OF ANY VARIANCE BETWEEN FACTUAL AND DRAWN CONDITIONS.

No.	Date	Issue Notes	Appr
4	3/29/24	rebid revisions	

No.	Date	Issue Notes	Zone
3	02/19/2024	permit comment response	
2	01/3/2024	release for bid	
1	12/7/2023	permit subm	

Date: TBD
Revision:
Project: 23703.culpeper
Drawing Code:
CAD File Name:
Plot Date:

Designed By:
Drawn By:
Checked By:
Reviewed By:
Submitted By:
Project Manager:

Design firm: NORMAN SMITH ARCHITECTURE
1341 H Street, Washington, DC 20002-4906
3637 State Mills Road, Sperryville, VA 22740
T 202.462.5888 www.normansmitharchitecture.com

Consultant: VALLEY ENGINEERING
4901 Crowe Drive, Mount Crawford, VA 22841
T 540.434.5365 www.valleyesp.com

Project Title: Culpeper County Community Pool Project
16388 Competition Drive
Culpeper, VA

Sheet Title: MECHANICAL LEGENDS

Scale: NTS

Sheet No.: M000.1

of

GENERAL NOTES

1. THE DRAWINGS ILLUSTRATE GENERAL SCOPE AND ARRANGEMENT OF MECHANICAL SYSTEMS. THEY SHALL BE FOLLOWED AS CLOSELY AS ACTUAL CONDITIONS ALLOW. MECHANICAL CONTRACTOR SHALL PROVIDE FITTINGS AND OFFSETS IN DUCTWORK AND PIPING TO AVOID FIELD INTERFERENCES.

2. ALL WORK SHALL CONFORM TO THE REGULATIONS OF APPLICABLE FEDERAL, STATE, LOCAL LAWS, ORDINANCES AND CODES. MECHANICAL WORK SHALL BE IN ACCORDANCE WITH THE LATEST ADOPTED EDITION OF THE INTERNATIONAL MECHANICAL CODE AND ANY APPROVED SUPPLEMENTS TO THAT CODE.

3. NOT ALL SPECIFICATIONS ON SHEETS M000.3, M000.4, M000.5, AND M000.6 WILL BE APPLICABLE TO THIS PROJECT. USE SPECIFICATION SECTIONS AND SUB SECTIONS AS THEY APPLY TO THE MECHANICAL SYSTEMS BEING INSTALLED.

4. DRAWINGS, SPECIFICATIONS, AND SCHEDULES TOGETHER FORM THE BASIS OF DESIGN.

5. PROVIDE FIRESTOPPING WHERE NECESSARY. MATCH RATINGS ILLUSTRATED ON ARCHITECTURAL DRAWINGS.

6. ELECTRICAL DATA SHOWN HERE IS THAT PUBLISHED BY THE MANUFACTURER OF EQUIPMENT SPECIFIED IN THESE DOCUMENTS.

7. INSTALL ALL EQUIPMENT MATERIAL AND ACCESSORY DEVICES PER MANUFACTURER'S WRITTEN INSTALLATION INSTRUCTIONS UNLESS OTHERWISE DIRECTED BY THE OWNER/ENGINEER. ENSURE MAINTENANCE ACCESS IS PROVIDED.

8. UNLESS OTHERWISE SPECIFIED, ALL DIMENSIONS SHOWN ARE INSIDE CLEAR DIMENSIONS FOR DUCTWORK.

9. DIMENSIONS AND DUCT/PIPING/EQUIPMENT SIZES INDICATED ON THE DRAWINGS MAY NOT REFLECT ACTUAL FIELD CONDITIONS IN ALL LOCATIONS. FIELD VERIFY DUCT, PIPING AND EQUIPMENT SIZES AND LOCATIONS PRIOR TO FABRICATION OF DUCTWORK OR PIPING SUCH THAT DUCTWORK, PIPING, AND EQUIPMENT WILL FIT IN APPROXIMATELY THE LOCATION SHOWN ON THE DRAWING.

10. PROJECT REPORTING:

    10.1.1. DURING CONSTRUCTION, THE CONTRACTOR SHALL KEEP AN ACCURATE RECORD OF ALL DEVIATIONS IN THE WORK BETWEEN THAT SHOWN ON THE DRAWINGS AND SPECIFICATIONS AND ITS ACTUAL INSTALLATION.

    10.1.2. THROUGHOUT THE PROGRESS OF THE WORK, THE CONTRACTOR SHALL MAINTAIN AT THE SITE, ONE RECORD COPY OF ALL DRAWINGS, SPECIFICATIONS, ADDENDA, RFI'S, CHANGE ORDERS, SHOP DRAWINGS, AND SUBMITTALS, MARKED CURRENTLY TO RECORD ALL CHANGES AND DEVIATIONS MADE DURING CONSTRUCTION. THIS SET SHALL THOROUGHLY INDICATE ALL FIELD CHANGES, MINOR AND OTHERWISE, SO THAT THE OWNER IS PROVIDED A COMPLETE RECORD OF THE ACTUAL BUILT CONDITIONS OF THE PROJECT.

    10.1.2.1. THE AS-BUILT DRAWINGS SHALL REFLECT THE ACTUAL INSTALLED CONDITIONS AND SHALL BE NEATLY AND ACCURATELY DRAWN TO SCALE TO MATCH THE DRAFTING OF THE CONSTRUCTION DOCUMENTS. THE AS-BUILT DRAWINGS SHALL BE PROVIDED IN A DIGITAL PDF FILE FORMAT.

    10.1.2.2. SUBJECT TO THE OWNER'S PRIOR APPROVAL, THE AS-BUILT DRAWINGS MAY BE A NEATLY ANNOTATED, HARD-COPY DRAWING SET THAT IS SCANNED TO A PDF DIGITAL FORMAT.

    10.1.2.3. SUBMIT ALL RECORD DOCUMENTS TO THE OWNER AND ARCHITECT AT THE COMPLETION OF THE WORK AS PART OF THE PROJECT CLOSE-OUT PROCESS.

    10.1.2.4. AS-BUILT REQUIRMENTS IN THIS SECTION TAKE PRECEDENCE OVER THOSE OF OTHER DRAWINGS/SECTIONS UNLESS OTHERWISE SPECFICIALLY NOTED.

11. SUBMITTALS:

    1. REFER TO THE ARCHITECTURAL DIVISION 00 AND 01 SPECIFICATIONS FOR ADDITIONAL SUBMITTAL REQUIREMENTS AND PROCESSES.

    2. THE CONTRACTOR SHALL SUBMIT INFORMATION TO THE OWNER DEMONSTRATING COMPLIANCE OF PRODUCTS AND INSTALLATION OF DRAWINGS AND SPECIFICATIONS. THIS INFORMATION SHALL INCLUDE BUT NOT LIMITED TO: CATALOG DATA, PERFORMANCE DATA, ELECTRICAL REQUIREMENTS INCLUDING OVER CURRENT PROTECTION DATA, PRODUCT DIMENSIONS, SPECIAL INSTALLATION REQUIREMENTS, AND RECOMMENDED CLEARANCES.

    3. RESUBMISSION: CONTRACTOR SHALL CHANGE OR CORRECT SUBMITTALS AS REQUIRED BY THE OWNER AND RESUBMIT UNTIL APPROVED. THE CONTRACTOR SHALL ALSO INDICATE ANY CHANGES WHICH HAVE BEEN MADE OTHER THAN THOSE REQUESTED BY THE OWNER OR ENGINEER.

12. PROVIDE A MINIMUM ONE YEAR WARRANTY TO COVER ALL MATERIALS, EQUIPMENT, AND LABOR. WARRANTY SHALL START AFTER FINAL ACCEPTANCE BY THE OWNER AND IT SHALL COVER COSTS ASSOCIATED WITH ANY REPAIRS OR REPLACEMENTS CAUSED BY DEFECTIVE WORKMANSHIP OR FAULTY MATERIALS OR EQUIPMENT.

MECHANICAL ABBREVIATIONS

ALL ABBREVIATIONS INDICATED MAY NOT APPEAR ON THESE CONTRACT DRAWINGS

AMP	AMPERE
A/C	AIR CONDITIONING
ABV	ABOVE
AFC	ABOVE FINISHED CEILING
AFF	ABOVE FINISHED FLOOR (18" UON)
AFG	ABOVE FINISHED GRADE (18" UON)
AHU	AIR HANDLING UNIT
ALT	ALTERNATE
AMB	AMBIENT
ANSI	AMERICAN NATIONAL STANDARDS INSTITUTE
APPROX	APPROXIMATE
AVG	AVERAGE
BEL	BELOW
BHP	BRAKE HORSEPOWER
BLDG	BUILDING
BTUH	BRITISH THERMAL UNIT PER HOUR
CC	COOLING COIL
CLG	CEILING
dB	DECIBELS
Db	DRY BULB TEMPERATURE
DEMO	DEMOLITION
DIA	DIAMETER
DN	DOWN
DWG	DRAWING
DX	DIRECT EXPANSION
EA	EXHAUST AIR
EC	ELECTRICAL CONTRACTOR
EDH	ELECTRIC DUCT HEATER
EER	ENERGY EFFICIENCY RATIO
EF	EXHAUST FAN
EQUIP	EQUIPMENT
ER	EXISTING RELOCATED
ET	EXPANSION TANK
ETR	EXISTING TO REMAIN
EUH	ELECTRIC UNIT HEATER
EWH	ELECTRIC WATER HEATER
EWT	ENTERING WATER TEMPERATURE
EX	EXISTING
FBO	FURNISHED BY OTHERS
FCU	FAN COIL UNIT
FD	FLOOR DRAIN
FLEX	FLEXIBLE
FLR	FLOOR
FOB	FLAT ON BOTTOM
FOT	FLAT ON TOP
FTR	FIN TUBE RADIATION
GC	GENERAL CONTRACTOR
GPH	GALLONS PER HOUR
GPM	GALLONS PER MINUTE
HC	HEATING COIL
HORZ	HORIZONTAL
HP	HORSEPOWER
HPC	HIGH PRESSURE STEAM CONDENSATE RETURN
HPS	HIGH PRESSURE STEAM
HGT	HEIGHT
HV	HEATING AND VENTILATING UNIT
HVAC	HEATING, VENTILATION, AND AIR CONDITIONING
I.E.	INVERT ELEVATION
I.V.	INLET VANES
KW	KILOWATTS
LBS	POUNDS
LBS/HR	POUNDS PER HOUR
LPC	LOW PRESSURE STEAM CONDENSATE RETURN
LPS	LOW PRESSURE STEAM
LWT	LEAVING WATER TEMPERATURE
MAX.	MAXIMUM
MBH	1,000 BTUH
MC	MECHANICAL CONTRACTOR
MFR	MANUFACTURER
MIN.	MINIMUM
MOD	MOTOR OPERATED DAMPER
MPC	MEDIUM PRESSURE STEAM CONDENSATE RETURN
MPS	MEDIUM PRESSURE STEAM
NC	NORMALLY CLOSED
NIC	NOT IN CONTRACT
NO	NORMALLY OPEN
NOM.	NOMINAL
NTS	NOT TO SCALE
OA	OUTSIDE AIR
PC	PUMPED CONDENSATE
PD	PRESSURE DROP
PRV	PRESSURE REDUCING VALVE
PSI	POUNDS PER SQUARE INCH
P/T	PRESSURE/TEMPERATURE TAP
RA	RETURN AIR
RD	ROOF DRAIN
RF	RETURN FAN
RH	RELATIVE HUMIDITY
SA	SUPPLY AIR
S/S	STAINLESS STEEL
SF.	SQUARE FEET
SP	STATIC PRESSURE
SPEC	SPECIFICATION
STD	STANDARD
SW	SOFTENED WATER
TEMP	TEMPERATURE
TOF	TOP OF FOOTER
TYP	TYPICAL
UC	UNDERCOUNTER
UH	UNIT HEATER
UL	UNDERWRITERS LABORATORY
U.O.N	UNLESS OTHERWISE NOTED
VD	VOLUME DAMPER (MANUAL OPPOSED BLADE)
VERT	VERTICAL
VFD	VARIABLE FREQUENCY DRIVE
W/	WITH
W/O	WITH OUT
Wb	WET BULB TEMPERATURE
WTR	WATER
WWM	WELDED WIRE MESH

CEILING COORDINATION NOTES

1. INSTALLATION OF ALL CEILING UTILITIES SHALL BE COORDINATED WITH ALL TRADES AND WITH STEEL PENETRATIONS.

2. CONFLICTS BETWEEN TRADES SHALL BE RESOLVED USING THE FOLLOWING PRIORITIZATION :
   a. HVAC DUCTWORK MAINS
   b. STORM PIPING
   c. HVAC BRANCH DUCTS
   d. HWS/HWR PIPING
   e. DCW/DHW/DHWR PIPING
   f. VENT PIPING
   g. CONDUIT

3. REGISTERS, GRILLES, AND DIFFUSERS SHALL NOT BE RELOCATED WITHOUT APPROVAL OF MECHANICAL ENGINEER AND ARCHITECT.

4. LIGHTS SHALL NOT BE RELOCATED WITHOUT APPROVAL OF THE ELECTRICAL ENGINEER AND ARCHITECT.

COMMONWEALTH OF VIRGINIA
PHILLIP L. GENTRY
Lic. No. 025757
01/03/2024
PROFESSIONAL ENGINEER

PLANS REPRESENTING ELECTRONIC FILES MAY NOT BE USED FOR ANY PURPOSE OTHER THAN THE ORIGINAL PROJECT AND EXTENSIONS OF THE PROJECT AS DEFINED BY THE ARCHITECT. ALL REPRODUCTIONS OF ELECTRONIC FILES MUST BE PROFESSIONALLY CERTIFIED TO BE ACCURATE AND COMPLETE REPRODUCTIONS OF THE ORIGINAL PLANS PREPARED BY THE ARCHITECT. ELECTRONIC FILES ARE NOT TO BE USED FOR ESTIMATING PURPOSES.

DRAWINGS AND DESIGN IS THE PROPERTY OF THE ARCHITECT AND THE OWNER IS PERMITTED TO USE THE DRAWINGS AND DESIGN FOR EXECUTION OF A BUILDING PROJECT. THE DRAWINGS AND DESIGN MAY NOT BE USED FOR ANY OTHER PROJECT WITHOUT THE WRITTEN CONSENT OF THE ARCHITECT. THE ARCHITECT RETAINS ALL COMMON LAW, STATUTORY AND OTHER RESERVED RIGHTS, INCLUDING THE COPYRIGHT THEREIN.

DRAWINGS AND DESIGN IS THE PROPERTY OF THE ARCHITECT AND THE OWNER IS PERMITTED TO USE THE DRAWINGS AND DESIGN FOR EXECUTION OF A BUILDING PROJECT. THE DRAWINGS AND DESIGN MAY NOT BE USED FOR ANY OTHER PROJECT WITHOUT THE WRITTEN CONSENT OF THE ARCHITECT. THE ARCHITECT RETAINS ALL COMMON LAW, STATUTORY AND OTHER RESERVED RIGHTS, INCLUDING THE COPYRIGHT THEREIN.

CONTRACTOR SHALL BE RESPONSIBLE FOR ALL DIMENSIONS AND CONDITIONS ON THE JOB AND SHALL REPORT ANY DISCREPANCIES TO ARCHITECT BEFORE BEGINNING WORK. THE ARCHITECT IS NOT RESPONSIBLE FOR GENERAL CONSTRUCTION METHODS, TECHNIQUES, SEQUENCES OR PROCEDURES, OR SAFETY PRECAUTIONS AND PROGRAMS IN CONNECTION WITH THE WORK.

IF THERE EXISTS AN ISSUE OR DISPUTE WITH THE DRAWINGS, THE ISSUE IS OFFICIALLY NO DISPUTE UNTIL THE ARCHITECT HAS BEEN NOTIFIED IN WRITING AND HAS HAD A REASONABLE TIME TO RESPOND. THE ARCHITECT IS NOT RESPONSIBLE FOR ANY ISSUE OR DISPUTE THAT ARISES FROM DEVIATIONS FROM THE DRAWINGS OR SPECIFICATIONS THAT WERE NOT REPORTED TO THE ARCHITECT IN WRITING.

DEPARTMENT FOR COMPLETE RESPONSIBILITY FOR ALL OF THE DESIGN AND CONSTRUCTION DOCUMENTS PRODUCED UNDER THEIR DIRECTION. THE ARCHITECT IS NOT RESPONSIBLE FOR ANY DESIGN OR CONSTRUCTION DOCUMENTS PRODUCED BY OTHERS.

VERIFY ALL EXISTING AND FIELD CONDITIONS PRIOR TO CONTRACTING WITH OWNER'S PROJECT MANAGER OF ANY VARIANCE BETWEEN FACTUAL AND DRAWING DESIGN.

No.	Date	Revision Notes	Zone	Appr

No.	Date	Issue Notes
2	01/3/2024	release for bid
1	12/7/2023	permit subm

Designed By: TBD
Drawn By: Date
Checked By: Reviewed By: Submitted By: Project Manager
Reviewer
Plot 23/7/3:culpeper
Drawing Code
CADD File Name
Plot Date

Design Firm
NORMAN SMITH ARCHITECTURE
1341 H Street, Washington, DC 20002-4906
3837 Slate Mills Road, Spernyville, VA 22740
T 202.462.5588 www.normansmitharchitecture.com

Consultant
VALLEY ENGINEERING
4901 Crove Drive, Mount Crawford, VA 22841
T 540.434.6365 www.valleyesp.com

Project Title
Culpeper County
Community Pool Project
163368 Competition Drive
Culpeper, VA

Sheet Title
MECHANICAL
ABBREVIATIONS AND
NOTES

Scale
NTS

Sheet No.
M000.2
of

SECTION 230500 - COMMON WORK RESULTS FOR HVAC
PART 1: GENERAL

1.1 SUMMARY
A. CONTRACTOR SHALL BE RESPONSIBLE FOR A COMPLETE SYSTEM INCLUDING HVAC BALANCING. ALL EQUIPMENT AND RELATED ITEMS INDICATED ON CONTRACT DRAWINGS SHALL BE BY MECHANICAL CONTRACTOR UNLESS NOTED BY OWNER OR BY OTHERS. DIFFERENCES AND/OR CONFLICTS BETWEEN CONTRACT DRAWINGS AND SPECIFICATIONS AND SHOP DRAWINGS, SHALL BE CALLED TO THE ATTENTION OF THE OWNER'S REPRESENTATIVE. IF DIFFERENCES ARE NOT NOTED TO THE OWNER'S REPRESENTATIVE PRIOR TO CONTRACT, OWNER'S REPRESENTATIVE SHALL DETERMINE GOVERNING CONDITION AND SUBCONTRACTOR SHALL PERFORM ALL WORK AT NO ADDITIONAL COST. TRADE NAMES USED TO ESTABLISH QUALITY MAY BE APPROVED BY THE OWNER'S REPRESENTATIVE. HVAC EQUIPMENT CONTROLS TO BE PROVIDED BY CONTRACTOR. EQUIPMENT/MATERIAL SUBSTITUTIONS ARE ACCEPTABLE, PROVIDED REQUEST FOR SUBSTITUTIONS IS/ARE MADE IN WRITING FOR APPROVAL BY ARCHITECT/ENGINEER TO ALLOW A MINIMUM OF 2 WEEKS REVIEW OF SUBSTITUTION REQUEST.

1.2 QUALITY ASSURANCE
A. STEEL SUPPORT WELDING: QUALIFY PROCESSES AND OPERATORS ACCORDING TO AWS D1.1, "STRUCTURAL WELDING CODE--STEEL."
B. STEEL PIPE WELDING: QUALIFY PROCESSES AND OPERATORS ACCORDING TO ASME BOILER AND PRESSURE VESSEL CODE: SECTION IX, "WELDING AND BRAZING QUALIFICATIONS."
1. COMPLY WITH PROVISIONS IN ASME B31 SERIES, "CODE FOR PRESSURE PIPING."
2. CERTIFY THAT EACH WELDER HAS PASSED AWS QUALIFICATION TESTS FOR WELDING PROCESSES INVOLVED AND THAT CERTIFICATION IS CURRENT.
C. ELECTRICAL CHARACTERISTICS FOR MECHANICAL EQUIPMENT: EQUIPMENT OF HIGHER ELECTRICAL CHARACTERISTICS MAY BE FURNISHED PROVIDE SUCH PROPOSED EQUIPMENT IS APPROVED IN WRITING AND CONNECTING ELECTRICAL SERVICES, CIRCUIT BREAKERS, AND CONDUIT SIZES ARE APPROPRIATELY MODIFIED. IF MINIMUM ENERGY RATINGS OR EFFICIENCIES ARE SPECIFIED, EQUIPMENT SHALL COMPLY WITH REQUIREMENTS.

1.3 DELIVERY, STORAGE, AND HANDLING
A. DELIVER PIPES AND TUBES WITH FACTORY-APPLIED END CAPS. MAINTAIN END CAPS THROUGH SHIPPING, STORAGE, AND HANDLING TO PREVENT PIPE END DAMAGE AND TO PREVENT ENTRANCE OF DIRT, DEBRIS, AND MOISTURE.
B. STORE PLASTIC PIPES PROTECTED FROM DIRECT SUNLIGHT. SUPPORT TO PREVENT SAGGING AND BENDING.
C. MATERIALS FURNISHED BY THE MECHANICAL CONTRACTOR: EQUIPMENT AND MATERIALS WILL BE RECEIVED/CHECKED IN UNDAMAGED CONDITION, WITH PROPER ACCESSORIES, AND STORED AT THE SITE IN A CONVENIENT LOCATION FOR INSTALLATION. DAMAGED EQUIPMENT AND/OR MATERIALS, SHALL BE REPLACED BY SUPPLIER AT NO COST TO THE OWNER. UNLESS OTHERWISE SPECIFIED, ALL MECHANICAL EQUIPMENT INDICATED IN THE SPECIFICATIONS, DETAILS, SCHEDULES, AND/OR DRAWINGS SHALL BE FURNISHED BY MECHANICAL CONTRACTOR AND INSTALLED BY THE MECHANICAL CONTRACTOR.
D. CONTRACTORS EQUIPMENT STORAGE: EQUIPMENT STORED AT THE SITE SHALL BE ADEQUATELY PROTECTED FROM THE WEATHER AND DAMAGE. EQUIPMENT AND/OR MATERIALS DAMAGED IN STORAGE SHALL BE REPLACED BY CONTRACTOR AT NO COST TO OWNER.
E. TOUCH-UP AND COMPLETION: HVAC CONTRACTOR WILL BE RESPONSIBLE FOR PROTECTING AND KEEPING CLEAN HVAC EQUIPMENT DURING INSTALLATION. HVAC CONTRACTOR TO TEST EACH SYSTEM AND/OR PIECE OF EQUIPMENT INSTALLED AND REPORT TO OWNER'S REPRESENTATIVE ANY EQUIPMENT DAMAGE OR MALFUNCTION. CONTRACTOR SHALL TOUCH-UP PAINT ANY SURFACES THAT HAVE BEEN DAMAGED OR PAINT SCRAPED OFF DURING CONSTRUCTION.

1.4 COORDINATION
A. COORDINATE PIPE SPACES, CHASES, SLOTS, OPENINGS IN BUILDING STRUCTURE, INSTALLATION OF SUPPORTING DEVICES AND SLEEVES DURING PROGRESS OF CONSTRUCTION, TO ALLOW FOR MECHANICAL INSTALLATIONS.
B. COORDINATE REQUIREMENTS FOR ACCESS PANELS AND DOORS FOR MECHANICAL ITEMS REQUIRING ACCESS THAT ARE CONCEALED BEHIND FINISHED SURFACES.

1.5 TEMPORARY HEATING, POWER, COMPRESSED AIR, AND WATER
A. WILL BE ARRANGED BY THE CONTRACTOR AT THE SITE.

1.6 ELECTRICAL WIRING
A. ELECTRICAL CONTRACTOR SHALL PROVIDE ALL POWER WIRING, INCLUDING CONDUIT, WIRE AND CONNECTIONS. ALL STARTERS, FUSES, AND DISCONNECTS BY ELECTRICAL CONTRACTOR EXCEPT WHERE SPECIFIED AS PART OF PACKAGED EQUIPMENT. STARTERS THAT COME WITH EQUIPMENT SHALL BE AUTOMATIC AND HAVE THERMAL OVERLOADS (3 FOR 3 PHASE) AND HAVE APPROPRIATE COVERS AND INTERLOCKS. ALL MOTORS LESS THAN 1/2 HP ARE 115V/1 PH/60 HZ UNLESS OTHERWISE SPECIFIED, WITH INTEGRAL THERMAL OVERLOAD UNLESS OTHERWISE SPECIFIED. ELECTRICAL CONTRACTOR SHALL LABEL ALL REMOVABLE PANELS FOR DISCONNECTS IN EQUIPMENT CABINETS WITH NAMEPLATE FURNISHED BY CONTRACTOR (LABELED - "ELECTRICAL SERVICE DISCONNECT LOCATED BEHIND THIS PANEL"). ELECTRICAL DISCONNECTS AND/OR ELECTRICAL BOXES/PANELS SHALL NOT BE INSTALLED OVER NAMEPLATES OF EQUIPMENT.

PART 2: PRODUCTS

2.1 MANUFACTURERS
A. IN OTHER PART 2 ARTICLES WHERE SUBPARAGRAPH TITLES BELOW INTRODUCE LISTS, THE FOLLOWING REQUIREMENTS APPLY FOR PRODUCT SELECTION:
1. MANUFACTURERS: SUBJECT TO COMPLIANCE WITH REQUIREMENTS, PROVIDE PRODUCTS BY THE MANUFACTURERS SPECIFIED.

2.2 JOINING MATERIALS
A. REFER TO INDIVIDUAL DIVISION 23 PIPING SECTIONS FOR SPECIAL JOINING MATERIALS NOT LISTED BELOW.
B. PIPE-FLANGE GASKET MATERIALS: SUITABLE FOR CHEMICAL AND THERMAL CONDITIONS OF PIPING SYSTEM CONTENTS.
C. FLANGE BOLTS AND NUTS: ASME B18.2.1, CARBON STEEL, UNLESS OTHERWISE INDICATED.
D. SOLDER FILLER METALS: ASTM B 32, LEAD-FREE ALLOYS. INCLUDE WATER-FLUSHABLE FLUX ACCORDING TO ASTM B813.
E. BRAZING FILLER METALS: AWS A5.8, BCUP SERIES, COPPER-PHOSPHORUS ALLOYS FOR GENERAL-DUTY BRAZING, UNLESS OTHERWISE INDICATED; A AND AWS A5.8, BAG1, SILVER ALLOY FOR REFRIGERANT PIPING, UNLESS OTHERWISE INDICATED.
F. WELDING FILLER METALS: COMPLY WITH AWS D10.12 FOR WELDING MATERIALS APPROPRIATE FOR WALL THICKNESS AND CHEMICAL ANALYSIS OF STEEL PIPE BEING WELDED.
G. SOLVENT CEMENTS FOR JOINING PVC PIPING: ASTM D 2564. INCLUDE PRIMER ACCORDING TO ASTM F 656.

2.3 DIELECTRIC FITTINGS
A. DESCRIPTION: COMBINATION FITTING OF COPPER ALLOY AND FERROUS MATERIALS WITH THREADED, SOLDER-JOINT, PLAIN, OR WELD-NECK END CONNECTIONS THAT MATCH PIPING SYSTEM MATERIALS. DIELECTRIC UNIONS, FLANGES, FLANGE KITS, COUPLINGS, AND NIPPLES.
B. INSULATING MATERIAL: SUITABLE FOR SYSTEM FLUID, PRESSURE, AND TEMPERATURE.

2.4 MECHANICAL SLEEVE SEALS
A. DESCRIPTION: MODULAR SEALING ELEMENT UNIT, DESIGNED FOR FIELD ASSEMBLY, TO FILL ANNULAR SPACE BETWEEN PIPE AND SLEEVE. SEALING ELEMENTS SHALL BE EPDM INTERLOCKING LINKS SHAPED TO FIT SURFACE OF PIPE AND OF TYPE AND NUMBER REQUIRED FOR PIPE MATERIAL AND SIZE OF PIPE. PRESSURE PLATES SHALL BE COMPOSITE OR PLASTIC. INCLUDE TWO FOR EACH SEALING ELEMENT. CONNECTING BOLTS AND NUTS SHALL BE STAINLESS STEEL OF LENGTH REQUIRED TO SECURE PRESSURE PLATES TO SEALING ELEMENTS. INCLUDE ONE FOR EACH SEALING ELEMENT.
B. MANUFACTURERS:
1. LINK-SEAL.
2. ADVANCE PRODUCTS & SYSTEMS, INC.
3. MASON-DALLAS.
4. METRAFLEX CO.

2.5 SLEEVES
A. GALVANIZED-STEEL SHEET: 0.0239-INCH MINIMUM THICKNESS; ROUND TUBE CLOSED WITH WELDED LONGITUDINAL JOINT.
B. STEEL PIPE: ASTM A 53, TYPE E, GRADE B, SCHEDULE 40, GALVANIZED, PLAIN ENDS.
C. CAST IRON: CAST OR FABRICATED "WALL PIPE" EQUIVALENT TO DUCTILE-IRON PRESSURE PIPE, WITH PLAIN ENDS AND INTEGRAL WATERSTOP, UNLESS OTHERWISE INDICATED.

2.6 ESCUTCHEONS
A. DESCRIPTION: MANUFACTURED WALL AND CEILING ESCUTCHEONS AND FLOOR PLATES, WITH POLISHED CHROME-PLATED FINISH.

2.7 GROUT
A. DESCRIPTION: ASTM C 1107, GRADE B, NON-SHRINK AND NONMETALLIC, DRY HYDRAULIC-CEMENT GROUT. CHARACTERISTICS: POST-HARDENING, VOLUME-ADJUSTING, NON-STAINING, NON-CORROSIVE, NONGASEOUS, AND RECOMMENDED FOR INTERIOR AND EXTERIOR APPLICATIONS. DESIGN MIX SHALL BE 5000-PSI, 28-DAY COMPRESSIVE STRENGTH. PREMIXED AND FACTORY PACKAGED.

PART 3: EXECUTION

3.1 MECHANICAL DEMOLITION
A. DISCONNECT, DEMOLISH, AND REMOVE MECHANICAL SYSTEMS, EQUIPMENT, AND COMPONENTS INDICATED TO BE REMOVED. REMOVE PORTION OF PIPING OR DUCT INDICATED TO BE REMOVED AND CAP OR PLUG REMAINING PIPING OR DUCT WITH SAME OR COMPATIBLE MATERIAL. DISCONNECT AND CAP SERVICES AND REMOVE EQUIPMENT AS INDICATED. DELIVER TO OWNER WHERE INDICATED.
B. IF PIPE, INSULATION, OR EQUIPMENT TO REMAIN IS DAMAGED IN APPEARANCE OR IS UNSERVICEABLE, REMOVE DAMAGED OR UNSERVICEABLE PORTIONS AND REPLACE WITH NEW PRODUCTS OF EQUAL CAPACITY AND QUALITY.

3.2 PIPING SYSTEMS - COMMON REQUIREMENTS
A. INSTALL PIPING ACCORDING TO THE FOLLOWING REQUIREMENTS AND DIVISION 23 SECTIONS SPECIFYING PIPING SYSTEMS. SELECT SYSTEM COMPONENTS WITH PRESSURE RATING EQUAL TO OR GREATER THAN SYSTEM OPERATING PRESSURE.
B. DRAWING PLANS, SCHEMATICS, AND DIAGRAMS INDICATE GENERAL LOCATION AND ARRANGEMENT OF PIPING SYSTEMS. INDICATED LOCATIONS AND ARRANGEMENTS WERE USED TO SIZE PIPE AND CALCULATE FRICTION LOSS, EXPANSION, PUMP SIZING, AND OTHER DESIGN CONSIDERATIONS. INSTALL PIPING AS INDICATED UNLESS DEVIATIONS TO LAYOUT ARE APPROVED.
C. INSTALL PIPING IN CONCEALED LOCATIONS, UNLESS OTHERWISE INDICATED AND EXCEPT IN EQUIPMENT ROOMS AND SERVICE AREAS. INSTALL PIPING INDICATED TO BE EXPOSED AND PIPING IN EQUIPMENT ROOMS AND SERVICE AREAS AT RIGHT ANGLES OR PARALLEL TO BUILDING WALLS. DIAGONAL RUNS ARE PROHIBITED UNLESS SPECIFICALLY INDICATED OTHERWISE.
D. INSTALL PIPING ABOVE ACCESSIBLE CEILINGS TO ALLOW SUFFICIENT SPACE FOR CEILING PANEL REMOVAL.
E. INSTALL PIPING TO PERMIT VALVE SERVICING.
F. INSTALL PIPING AT INDICATED SLOPES AND FREE OF SAGS AND BENDS. INSTALL FITTINGS FOR CHANGES IN DIRECTION AND BRANCH CONNECTIONS.
G. INSTALL PIPING TO ALLOW APPLICATION OF INSULATION.
H. INSTALL ESCUTCHEONS FOR PENETRATIONS OF WALLS, CEILINGS, AND FLOORS ACCORDING TO THE FOLLOWING:
1. NEW PIPING:
a. PIPING WITH FITTING OR SLEEVE PROTRUDING FROM WALL: ONE-PIECE, DEEP-PATTERN TYPE.
b. INSULATED PIPING IN FINISHED SPACES: SPLIT-CASTING, CAST-BRASS TYPE WITH POLISHED CHROME-PLATED FINISH.
c. BARE PIPING AT WALL, FLOOR AND CEILING PENETRATIONS IN FINISHED SPACES: SPLIT-CASTING, CAST-BRASS TYPE WITH POLISHED CHROME-PLATED FINISH.
I. INSTALL SLEEVES FOR PIPES PASSING THROUGH CONCRETE AND MASONRY WALLS, GYPSUM-BOARD PARTITIONS, AND CONCRETE FLOOR AND ROOF SLABS. SLEEVES ARE NOT REQUIRED FOR CORE-DRILLED HOLES.
1. CUT SLEEVES TO LENGTH FOR MOUNTING FLUSH WITH BOTH SURFACES EXCEPT EXTEND SLEEVES INSTALLED IN FLOORS OF MECHANICAL EQUIPMENT AREAS OR OTHER WET AREAS 2 INCHES ABOVE FINISHED FLOOR LEVEL. EXTEND CAST-IRON SLEEVE FITTINGS BELOW FLOOR SLAB AS REQUIRED TO SECURE CLAMPING RING IF RING IS SPECIFIED.
2. INSTALL SLEEVES IN NEW WALLS AND SLABS AS NEW WALLS AND SLABS ARE CONSTRUCTED.
3. INSTALL SLEEVES THAT ARE LARGE ENOUGH TO PROVIDE 1/4-INCH ANNULAR CLEAR SPACE BETWEEN SLEEVE AND PIPE OR PIPE INSULATION. USE THE FOLLOWING SLEEVE MATERIALS:
a. STEEL PIPE SLEEVES: FOR PIPES SMALLER THAN NPS 4.
b. STEEL SHEET SLEEVES: FOR PIPES NPS 4 AND LARGER, PENETRATING GYPSUM-BOARD PARTITIONS.
c. STACK SLEEVE FITTINGS: FOR PIPES PENETRATING FLOORS WITH MEMBRANE WATERPROOFING. SECURE FLASHING BETWEEN CLAMPING FLANGES. INSTALL SECTION OF CAST-IRON SOIL PIPE TO EXTEND SLEEVE TO 2 INCHES ABOVE FINISHED FLOOR LEVEL.
· SEAL SPACE OUTSIDE OF SLEEVE FITTINGS WITH GROUT.
4. EXCEPT FOR UNDERGROUND WALL PENETRATIONS, SEAL ANNULAR SPACE BETWEEN SLEEVE AND PIPE OR PIPE INSULATION, USING JOINT SEALANTS APPROPRIATE FOR SIZE, DEPTH, AND LOCATION OF JOINT.
J. ABOVEGROUND, EXTERIOR-WALL PIPE PENETRATIONS: SEAL PENETRATIONS USING SLEEVES AND MECHANICAL SLEEVE SEALS. SELECT SLEEVE SIZE TO ALLOW FOR 1-INCH ANNULAR CLEAR SPACE BETWEEN PIPE AND SLEEVE FOR INSTALLING MECHANICAL SLEEVE SEALS.
1. INSTALL STEEL PIPE FOR SLEEVES SMALLER THAN 6 INCHES IN DIAMETER.
2. INSTALL CAST-IRON "WALL PIPES" FOR SLEEVES 6 INCHES AND LARGER IN DIAMETER.
3. MECHANICAL SLEEVE SEAL INSTALLATION: SELECT TYPE AND NUMBER OF SEALING ELEMENTS REQUIRED FOR PIPE MATERIAL AND SIZE. POSITION PIPE IN CENTER OF SLEEVE. ASSEMBLE MECHANICAL SLEEVE SEALS AND INSTALL IN ANNULAR SPACE BETWEEN PIPE AND SLEEVE. TIGHTEN BOLTS AGAINST PRESSURE PLATES THAT CAUSE SEALING ELEMENTS TO EXPAND AND MAKE WATERTIGHT SEAL.
K. UNDERGROUND, EXTERIOR-WALL PIPE PENETRATIONS: INSTALL CAST-IRON "WALL PIPES" FOR SLEEVES. SEAL PIPE PENETRATIONS USING MECHANICAL SLEEVE SEALS. SELECT SLEEVE SIZE TO ALLOW FOR 1-INCH ANNULAR CLEAR SPACE BETWEEN PIPE AND SLEEVE FOR INSTALLING MECHANICAL SLEEVE SEALS.
1. MECHANICAL SLEEVE SEAL INSTALLATION: SELECT TYPE AND NUMBER OF SEALING ELEMENTS REQUIRED FOR PIPE MATERIAL AND SIZE. POSITION PIPE IN CENTER OF SLEEVE. ASSEMBLE MECHANICAL SLEEVE SEALS AND INSTALL IN ANNULAR SPACE BETWEEN PIPE AND SLEEVE. TIGHTEN BOLTS AGAINST PRESSURE PLATES THAT CAUSE SEALING ELEMENTS TO EXPAND AND MAKE WATERTIGHT SEAL.
L. FIRE-BARRIER PENETRATIONS: MAINTAIN INDICATED FIRE RATING OF WALLS, PARTITIONS, CEILINGS, AND FLOORS AT PIPE PENETRATIONS. SEAL PIPE PENETRATIONS WITH FIRESTOP MATERIALS BASED ON UL REQUIREMENTS.
M. VERIFY FINAL EQUIPMENT LOCATIONS FOR ROUGHING-IN.
N. REFER TO EQUIPMENT SPECIFICATIONS IN OTHER SECTIONS OF THESE SPECIFICATIONS FOR ROUGHING-IN REQUIREMENTS.

3.3 PIPING JOINT CONSTRUCTION
A. JOIN PIPE AND FITTINGS ACCORDING TO THE FOLLOWING REQUIREMENTS AND DIVISION 23 SECTIONS SPECIFYING PIPING SYSTEMS.
B. REAM ENDS OF PIPES AND TUBES AND REMOVE BURRS. BEVEL PLAIN ENDS OF STEEL PIPE.
C. REMOVE SCALE, SLAG, DIRT, AND DEBRIS FROM INSIDE AND OUTSIDE OF PIPE AND FITTINGS BEFORE ASSEMBLY.
D. SOLDERED JOINTS: APPLY ASTM B 813, WATER-FLUSHABLE FLUX, UNLESS OTHERWISE INDICATED, TO TUBE END. CONSTRUCT JOINTS ACCORDING TO ASTM B 828 OR CDA'S "COPPER TUBE HANDBOOK," USING LEAD-FREE SOLDER ALLOY COMPLYING WITH ASTM B 32.
E. BRAZED JOINTS: CONSTRUCT JOINTS ACCORDING TO AWS'S "BRAZING HANDBOOK," "PIPE AND TUBE" CHAPTER, USING COPPER-PHOSPHORUS BRAZING FILLER METAL COMPLYING WITH AWS A5.8.
F. THREADED JOINTS: THREAD PIPE WITH TAPERED PIPE THREADS ACCORDING TO ASME B1.20.1. CUT THREADS FULL AND CLEAN USING SHARP DIES. REAM THREADED PIPE ENDS TO REMOVE BURRS AND RESTORE FULL ID. JOIN PIPE FITTINGS AND VALVES AS FOLLOWS:
1. APPLY APPROPRIATE TAPE OR THREAD COMPOUND TO EXTERNAL PIPE THREADS UNLESS DRY SEAL THREADING IS SPECIFIED.
2. DAMAGED THREADS: DO NOT USE PIPE OR PIPE FITTINGS WITH THREADS THAT ARE CORRODED OR DAMAGED. DO NOT USE PIPE SECTIONS THAT HAVE CRACKED OR OPEN WELDS.
G. WELDED JOINTS: CONSTRUCT JOINTS ACCORDING TO AWS D10.12, USING QUALIFIED PROCESSES AND WELDING OPERATORS ACCORDING TO PART 1 "QUALITY ASSURANCE" ARTICLE.
H. FLANGED JOINTS: SELECT APPROPRIATE GASKET MATERIAL, SIZE, TYPE, AND THICKNESS FOR SERVICE APPLICATION. INSTALL GASKET CONCENTRICALLY POSITIONED. USE SUITABLE LUBRICANTS ON BOLT THREADS.
I. PLASTIC PIPING SOLVENT-CEMENT JOINTS: CLEAN AND DRY JOINING SURFACES. JOIN PVC NON-PRESSURE PIPING ACCORDING TO ASTM D 2855. COMPLY WITH ASTM F 402 FOR SAFE-HANDLING PRACTICE OF CLEANERS, PRIMERS, AND SOLVENT CEMENTS.

3.4 PIPING CONNECTIONS
A. MAKE CONNECTIONS ACCORDING TO THE FOLLOWING, UNLESS OTHERWISE INDICATED:
1. INSTALL UNIONS, IN PIPING NPS 2 AND SMALLER, ADJACENT TO EACH VALVE AND AT FINAL CONNECTION TO EACH PIECE OF EQUIPMENT.
2. INSTALL FLANGES, IN PIPING NPS 2-1/2 AND LARGER, ADJACENT TO FLANGED VALVES AND AT FINAL CONNECTION TO EACH PIECE OF EQUIPMENT.
3. DRY PIPING SYSTEMS: INSTALL DIELECTRIC UNIONS AND FLANGES TO CONNECT PIPING MATERIALS OF DISSIMILAR METALS.
4. WET PIPING SYSTEMS: INSTALL DIELECTRIC COUPLING AND NIPPLE FITTINGS TO CONNECT PIPING MATERIALS OF DISSIMILAR METALS.

3.5 EQUIPMENT INSTALLATION - COMMON REQUIREMENTS
A. INSTALL EQUIPMENT TO ALLOW MAXIMUM POSSIBLE HEADROOM UNLESS SPECIFIC MOUNTING HEIGHTS ARE INDICATED. INSTALL EQUIPMENT LEVEL AND PLUMB, PARALLEL AND PERPENDICULAR TO OTHER BUILDING SYSTEMS AND COMPONENTS IN EXPOSED INTERIOR SPACES, UNLESS OTHERWISE INDICATED.
B. INSTALL MECHANICAL EQUIPMENT TO FACILITATE SERVICE, MAINTENANCE, AND REPAIR OR REPLACEMENT OF COMPONENTS. CONNECT EQUIPMENT FOR EASE OF DISCONNECTING, WITH MINIMUM INTERFERENCE TO OTHER INSTALLATIONS. EXTEND GREASE FITTINGS TO ACCESSIBLE LOCATIONS.
C. INSTALL EQUIPMENT TO ALLOW RIGHT OF WAY FOR PIPING INSTALLED AT REQUIRED SLOPE.

3.6 EQUIPMENT START-UP
A. STARTUP: CONTRACTOR TO LUBRICATE BEARINGS AS REQUIRED. INSTALL BELTS AND CHECK FOR PROPER BELT TENSION AND MOTOR ROTATION. INSTALL ALL SAFETY DEVICES, AND FILTERS, AND CONNECT ALL DAMPER LINKAGES AND REMOVE ALL SHIPPING HOLD DOWN CLAMPS AND BLOCKING.

3.7 PAINTING
A. DAMAGE AND TOUCH-UP: REPAIR MARRED AND DAMAGED FACTORY-PAINTED FINISHES WITH MATERIALS AND PROCEDURES TO MATCH ORIGINAL FACTORY FINISH.

3.8 CONCRETE BASES
A. CONCRETE BASES: ANCHOR EQUIPMENT TO CONCRETE BASE ACCORDING TO EQUIPMENT MANUFACTURER'S WRITTEN INSTRUCTIONS AND ACCORDING TO SEISMIC CODES AT PROJECT.
1. CONSTRUCT CONCRETE BASES OF DIMENSIONS INDICATED, BUT NOT LESS THAN 4 INCHES LARGER IN BOTH DIRECTIONS THAN SUPPORTED UNIT.
2. INSTALL DOWEL RODS TO CONNECT CONCRETE BASE TO CONCRETE FLOOR. UNLESS OTHERWISE INDICATED, INSTALL DOWEL RODS ON 18-INCH CENTERS AROUND THE FULL PERIMETER OF THE BASE.
3. INSTALL EPOXY-COATED ANCHOR BOLTS FOR SUPPORTED EQUIPMENT THAT EXTEND THROUGH CONCRETE BASE, AND ANCHOR INTO STRUCTURAL CONCRETE FLOOR.
4. PLACE AND SECURE ANCHORAGE DEVICES. USE SUPPORTED EQUIPMENT MANUFACTURER'S SETTING DRAWINGS, TEMPLATES, DIAGRAMS, INSTRUCTIONS, AND DIRECTIONS FURNISHED WITH ITEMS TO BE EMBEDDED.
5. INSTALL ANCHOR BOLTS TO ELEVATIONS REQUIRED FOR PROPER ATTACHMENT TO SUPPORTED EQUIPMENT.
6. INSTALL ANCHOR BOLTS ACCORDING TO ANCHOR-BOLT MANUFACTURER'S WRITTEN INSTRUCTIONS.
7. USE 3000-PSI, 28-DAY COMPRESSIVE-STRENGTH CONCRETE AND 4 X 4 GALVANIZED WELDED WIRE MESH REINFORCEMENT.

3.9 ERECTION OF METAL SUPPORTS AND ANCHORAGES
A. STRUCTURAL STEEL SHALL COMPLY WITH THE FOLLOWING:
1. CHANNELS, ANGLES, PLATES AND BARS: ASTM A36.
2. W-SHAPES: ASTM A992 (GRADE 50).
3. STEEL TUBING: ASTM A500 (GRADE B).
4. STEEL PIPE: ASTM A53, E OR S (GRADE B).
B. CUT, FIT, AND PLACE MISCELLANEOUS METAL SUPPORTS ACCURATELY IN LOCATION, ALIGNMENT, AND ELEVATION TO SUPPORT AND ANCHOR MECHANICAL MATERIALS AND EQUIPMENT. FIELD WELDING SHALL COMPLY WITH AWS D1.1.

3.10 GROUTING
A. MIX AND INSTALL GROUT FOR MECHANICAL EQUIPMENT BASE BEARING SURFACES, PUMP AND OTHER EQUIPMENT BASE PLATES, AND ANCHORS. CLEAN SURFACES AND PROVIDE FORMS AS REQUIRED FOR PLACEMENT OF GROUT.
B. AVOID AIR ENTRAPMENT DURING PLACEMENT OF GROUT. PLACE GROUT, COMPLETELY FILLING EQUIPMENT BASES. PLACE GROUT ON CONCRETE BASES AND PROVIDE SMOOTH BEARING SURFACE FOR EQUIPMENT. PLACE GROUT AROUND ANCHORS. CURE PLACED GROUT.

SECTION 230529 - HANGERS AND SUPPORTS FOR HVAC PIPING AND EQUIPMENT
PART 1: GENERAL

1.1 SUMMARY
A. ALL HVAC DEVICES AND EQUIPMENT SHALL BE SECURELY MOUNTED TO THE BUILDING STRUCTURE AND/OR EXTERIOR CONCRETE PAD (MIN. 4" DEPTH) AND SHALL NOT DEPEND UPON CEILING OR WALL SURFACES FOR THEIR SUPPORT. HVAC EQUIPMENT SHALL BE INCAPABLE OF BEING ROTATED OR DISPLACED. THE SUPPORT ATTACHMENT SHALL ADEQUATELY SUPPORT THE WEIGHT OF THE FIXTURE, DEVICE OR EQUIPMENT PLUS THE WEIGHT OF THE SUPPORT ATTACHMENT. VIBRATION ISOLATION DEVICES SHALL BE INSTALLED TO PREVENT TRANSFER OF EQUIPMENT VIBRATION TO DUCTWORK, PIPING AND BUILDING STRUCTURE. CONCRETE HOUSEKEEPING PADS SHALL BE PROVIDED FOR EQUIPMENT MOUNTED ON CONCRETE PADS EXTERIOR TO THE BUILDING.
B. ALL PIPING SHALL BE SUPPORTED FROM STRUCTURE WITH UL LISTED HANGERS AND SUPPORTS SUITABLE FOR THE INTENDED INSTALLATION. DESIGN, SELECTION, SPACING, AND APPLICATION OF HANGERS AND SUPPORTS SHALL COMPLY WITH ANSI B31.1 AND MSS SP-69.

SECTION 230553 - IDENTIFICATION FOR HVAC PIPING AND EQUIPMENT
PART 1: GENERAL

1.1 SUMMARY
A. THIS SECTION INCLUDES THE FOLLOWING MECHANICAL IDENTIFICATION MATERIALS AND THEIR INSTALLATION:
1. EQUIPMENT MARKERS.
2. ACCESS PANEL AND DOOR MARKERS.
3. PIPE MARKERS.
4. VALVE TAGS.
5. VALVE SCHEDULES.

1.2 SUBMITTALS
A. PRODUCT DATA: FOR EACH TYPE OF PRODUCT INDICATED.
B. VALVE NUMBERING SCHEME.
a. VALVE SCHEDULES: FOR EACH PIPING SYSTEM. FURNISH EXTRA COPIES (IN ADDITION TO MOUNTED COPIES) TO INCLUDE IN MAINTENANCE MANUALS.

1.3 QUALITY ASSURANCE
A. ASME COMPLIANCE: COMPLY WITH ASME A13.1, "SCHEME FOR THE IDENTIFICATION OF PIPING SYSTEMS," FOR LETTER SIZE, LENGTH OF COLOR FIELD, COLORS, AND VIEWING ANGLES OF IDENTIFICATION DEVICES FOR PIPING.

1.4 COORDINATION
A. COORDINATE INSTALLATION OF IDENTIFYING DEVICES WITH COMPLETION OF COVERING AND PAINTING OF SURFACES WHERE DEVICES ARE TO BE APPLIED.
B. COORDINATE INSTALLATION OF IDENTIFYING DEVICES WITH LOCATION OF ACCESS PANELS AND DOORS. INSTALL IDENTIFYING DEVICES BEFORE INSTALLING ACOUSTICAL CEILINGS AND SIMILAR CONCEALMENT.

PART 2: PRODUCTS

2.1 MANUFACTURERS
A. MANUFACTURERS: SUBJECT TO COMPLIANCE WITH REQUIREMENTS, PROVIDE PRODUCTS BY THE MANUFACTURERS SPECIFIED.
1. BRADY CORP.
2. SETON.
3. WESTLINE.

2.2 EQUIPMENT IDENTIFICATION DEVICES
A. EQUIPMENT MARKERS: ENGRAVED, LAMINATED PLASTIC WITH BLACK SURFACE AND WHITE CORE. WHEN USED EXPOSED IN FINISHED ROOMS, PROVIDE WHITE SURFACE AND BLACK CORE. UV RATED FOR EXTERIOR EQUIPMENT. INCLUDE CONTACT-TYPE, PERMANENT ADHESIVE.
1. TERMINOLOGY: MATCH SCHEDULES AS CLOSELY AS POSSIBLE.
2. DATA:
a. UNIT MARK/DESIGNATION.
b. EQUIPMENT SERVICE/AREA SERVED.
3. SIZE: 2-1/2 BY 4 INCHES FOR CONTROL DEVICES, DAMPERS, AND VALVES; 4-1/2 BY 6 INCHES FOR EQUIPMENT.
B. ACCESS PANEL AND DOOR MARKERS: 1/16-INCH- THICK, ENGRAVED LAMINATED PLASTIC, WHITE SURFACE AND BLACK CORE, WITH ABBREVIATED TERMS AND NUMBERS CORRESPONDING TO IDENTIFICATION. PROVIDE 1/8-INCH CENTER HOLE FOR ATTACHMENT.
1. FASTENERS: SELF-TAPPING, STAINLESS-STEEL SCREWS.

2.3 PIPING IDENTIFICATION DEVICES
A. MANUFACTURED PIPE MARKERS, GENERAL: PREPRINTED, COLOR-CODED, WITH LETTERING INDICATING SERVICE, AND SHOWING DIRECTION OF FLOW.
1. COLORS: COMPLY WITH ASME A13.1, UNLESS OTHERWISE INDICATED.
2. LETTERING:
a. CHILLED WATER SUPPLY/CHILLED WATER RETURN.
b. HEATING HOT WATER SUPPLY/HEATING HOT WATER RETURN.
c. HIGH PRESSURE STEAM.
d. HIGH PRESSURE CONDENSATE.
e. MEDIUM PRESSURE STEAM.
f. MEDIUM PRESSURE CONDENSATE.
g. LOW PRESSURE STEAM.
h. LOW PRESSURES CONDENSATE.
i. PUMPED CONDENSATE.
j. REFRIGERANT LIQUID.
k. REFRIGERANT SUCTION.
l. NATURAL GAS.
3. PIPES WITH OD, INCLUDING INSULATION, LESS THAN 6 INCHES: FULL-BAND PIPE MARKERS EXTENDING 360 DEGREES AROUND PIPE AT EACH LOCATION.
4. PIPES WITH OD, INCLUDING INSULATION, 6 INCHES AND LARGER: EITHER FULL-BAND OR STRIP-TYPE PIPE MARKERS AT LEAST THREE TIMES LETTER HEIGHT AND OF LENGTH REQUIRED FOR LABEL.
5. ARROWS: INTEGRAL WITH PIPING SYSTEM SERVICE LETTERING TO ACCOMMODATE BOTH DIRECTIONS; OR AS SEPARATE UNIT ON EACH PIPE MARKER TO INDICATE DIRECTION OF FLOW.
B. PRETENSIONED PIPE MARKERS: PRECOILED SEMI-RIGID PLASTIC FORMED TO COVER FULL CIRCUMFERENCE OF PIPE AND TO ATTACH TO PIPE WITHOUT ADHESIVE.
C. SHAPED PIPE MARKERS: PREFORMED SEMI-RIGID PLASTIC FORMED TO PARTIALLY COVER CIRCUMFERENCE OF PIPE AND TO ATTACH TO PIPE WITH MECHANICAL FASTENERS THAT DO NOT PENETRATE INSULATION VAPOR BARRIER.
D. MARKER DETAILS, O.D. OF LINE OR COVERING (INCHES):
1. LESS THAN 3/4": 8 INCH LONG COLOR BAND, 1/2" HIGH LETTERS.
2. 3/4" TO 2": 8 INCH LONG COLOR BAND, 3/4" HIGH LETTERS.
3. 2-1/2" TO 6": 12 INCH LONG COLOR BAND, 1-1/2" HIGH LETTERS.
4. OVER 6": 24 INCH LONG COLOR BAND, 2-1/2" HIGH LETTERS.

2.4 VALVE TAGS
A. VALVE TAGS: STAMPED OR ENGRAVED WITH 1/4-INCH LETTERS FOR PIPING SYSTEM ABBREVIATION AND 1/2-INCH NUMBERS, WITH NUMBERING SCHEME. PROVIDE 5/32-INCH HOLE FOR FASTENER.
1. MATERIAL: 0.032-INCH- THICK BRASS.
2. VALVE-TAG FASTENERS: BRASS WIRE-LINK OR BEADED CHAIN; OR S-HOOK.

2.5 VALVE SCHEDULES
A. VALV

3.2 PIPING IDENTIFICATION
A. INSTALL MANUFACTURED PIPE MARKERS INDICATING SERVICE ON EACH PIPING SYSTEM. INSTALL WITH FLOW INDICATION ARROWS SHOWING DIRECTION OF FLOW.
1. PIPES WITH OD, INCLUDING INSULATION, LESS THAN 6 INCHES: PRETENSIONED PIPE MARKERS. USE SIZE TO ENSURE A TIGHT FIT.
2. PIPES WITH OD, INCLUDING INSULATION, 6 INCHES AND LARGER: SHAPED PIPE MARKERS. USE SIZE TO MATCH PIPE AND SECURE WITH FASTENERS.
B. LOCATE PIPE MARKERS WHERE PIPING IS EXPOSED IN FINISHED SPACES; MACHINE ROOMS; ACCESSIBLE MAINTENANCE SPACES SUCH AS SHAFTS, TUNNELS, AND PLENUMS; CEILING SPACES AND UNDER FLOOR AREAS; AND EXTERIOR NON-CONCEALED LOCATIONS AS FOLLOWS:
1. NEAR EACH VALVE AND CONTROL DEVICE.
2. NEAR EACH BRANCH CONNECTION, EXCLUDING SHORT TAKEOFFS FOR FIXTURES AND TERMINAL UNITS. WHERE FLOW PATTERN IS NOT OBVIOUS, MARK EACH PIPE AT BRANCH.
3. NEAR PENETRATIONS THROUGH WALLS, FLOORS, CEILINGS, AND NON-ACCESSIBLE ENCLOSURES.
4. AT ACCESS DOORS, MANHOLES, AND SIMILAR ACCESS POINTS THAT PERMIT VIEW OF CONCEALED PIPING.
5. NEAR MAJOR EQUIPMENT ITEMS AND OTHER POINTS OF ORIGINATION AND TERMINATION.
6. SPACED AT MAXIMUM INTERVALS OF 50 FEET ALONG EACH RUN. REDUCE INTERVALS TO 25 FEET IN AREAS OF CONGESTED PIPING AND EQUIPMENT.

3.3 VALVE-TAG INSTALLATION
A. INSTALL TAGS ON MAIN AND BRANCH SHUT-OFF VALVES AND CONTROL DEVICES IN PIPING SYSTEMS, EXCEPT THE FOLLOWING: CHECK VALVES; VALVES WITHIN FACTORY-FABRICATED EQUIPMENT UNITS; PLUMBING FIXTURE SUPPLY STOPS; SHUTOFF VALVES; FAUCETS; CONVENIENCE AND LAWN-WATERING HOSE CONNECTIONS; AND HVAC TERMINAL DEVICES AND SIMILAR ROUGHING-IN CONNECTIONS OF END-USE FIXTURES AND UNITS. INSTALL VALVE TAGS FOR OTHER VALVES INCLUDING THE FOLLOWING: MAIN SYSTEM SHUTOFF VALVES, VALVES ON PIPING LEAVING CHASES, BRANCH OR RISER SHUTOFF VALVES. LIST TAGGED VALVES IN A VALVE SCHEDULE.
B. VALVE-TAG APPLICATION SCHEDULE: TAG VALVES ACCORDING TO SIZE, SHAPE, AND COLOR SCHEME AND WITH CAPTIONS SIMILAR TO THOSE INDICATED IN THE FOLLOWING:
1. VALVE-TAG SIZE AND SHAPE:
a. STEAM: 1-1/2 INCHES, ROUND.
b. CONDENSATE: 1-1/2 INCHES, ROUND.
c. CHILLED WATER: 1-1/2 INCHES, ROUND.
d. HEATING HOT WATER: 1-1/2 INCHES, ROUND.
2. VALVE-TAG COLOR:
a. STEAM: NATURAL.
b. CONDENSATE: NATURAL.
c. CHILLED WATER: NATURAL.
d. HEATING HOT WATER: NATURAL.
3. LETTER COLOR:
a. STEAM: BLACK.
b. CONDENSATE: BLACK.
c. CHILLED WATER: BLACK.
d. HEATING HOT WATER: BLACK.

3.4 VALVE-SCHEDULE INSTALLATION
A. MOUNT VALVE SCHEDULE ON WALL IN ACCESSIBLE LOCATION IN EACH MAJOR EQUIPMENT ROOM.

3.5 WARNING-TAG INSTALLATION
A. WRITE REQUIRED MESSAGE ON, AND ATTACH WARNING TAGS TO, EQUIPMENT AND OTHER ITEMS WHERE REQUIRED.

3.6 ADJUSTING
A. RELOCATE MECHANICAL IDENTIFICATION MATERIALS AND DEVICES THAT HAVE BECOME VISUALLY BLOCKED BY OTHER WORK.

SECTION 230593 - TESTING, ADJUSTING, AND BALANCING FOR HVAC
PART 1: GENERAL

1.1 SYSTEM BALANCING: (OWNER FURNISHED BY ANNANDALE BALANCING) (BY INDEPENDENT, NEBB CERTIFIED CONTRACTOR)
A. TAB CONTRACTOR RESPONSIBILITIES
1. BALANCING WORK SHALL BE IN ACCORDANCE WITH THE LATEST EDITION OF THE NEBB NATIONAL STANDARDS.
2. PERFORM A PRE-DEMOLITION BALANCE TO VERIFY SUPPLY, RETURN, AND EXHAUST CAPACITIES OF THE EXISTING SYSTEMS PER FLOOR OR MAJOR DUCT BRANCH.
3. PROVIDE A PRE-BALANCE REPORT AND IDENTIFY ANY DEFICIENCIES IN THESE SYSTEMS SUCH THAT NEW SYSTEM AIRFLOWS WILL NOT BE OBTAINED. NOTE ANY ADDITIONAL DAMPERS OUTSIDE THE AREA OF WORK THAT ARE REQUIRED FOR BALANCING AND THAT WILL BE PROVIDED BY OWNER.
4. PERFORM A SYSTEM BALANCE WHEN SYSTEM INSTALLATIONS ARE COMPLETE AND CEILINGS ARE INSTALLED, WHERE CEILINGS ARE REQUIRED. BALANCE SHALL INCLUDE OTHER FLOORS AFFECTED BY CHANGES WITHIN THE PROJECT AREA (I.E. EXHAUST SYSTEMS).
5. IF A BALANCING DEVICE IS PROVIDED WITH A MEMORY STOP, IT SHALL BE SET AND LOCKED. PERMANENTLY MARK THE SETTINGS TO BE RESTORED.
6. UPON COMPLETION OF THE WORK, SUBMIT (4) FOUR COPIES OF THE COMPLETE TEST AND BALANCE REPORT.
B. MECHANICAL CONTRACTOR RESPONSIBILITIES
1. THE MECHANICAL CONTRACTOR IS RESPONSIBLE FOR START UP AND OPERATION OF SYSTEMS DURING SYSTEM BALANCE. START UP SHALL INCLUDE: ALL EQUIPMENT OPERABLE IN SAFE AND NORMAL CONDITION. TEMPERATURE/HUMIDITY CONTROL SYSTEMS INSTALLED COMPLETE AND OPERABLE.
2. CONTRACTOR SHALL ASSIST TAB CONTRACTOR WITH MECHANICAL SYSTEMS AS REQUIRED TO COMPLETE BALANCE WORK.
3. HVAC CONTROLS CONTRACTOR SHALL ASSIST TAB CONTRACTOR WITH CONTROLS AS REQUIRED TO COMPLETE BALANCE WORK.

SECTION 230700 - HVAC INSULATION
PART 1: GENERAL

1.1 SUMMARY
A. THIS SECTION INCLUDES MECHANICAL INSULATION FOR DUCT AND PIPE INCLUDING THE FOLLOWING: INSULATION MATERIALS, INSULATING CEMENTS, ADHESIVES, MASTICS, SEALANTS, FACTORY-APPLIED JACKETS, FIELD-APPLIED FABRIC-REINFORCING MESH, FIELD-APPLIED JACKETS, TAPES, SECUREMENTS, CORNER ANGLES.

1.2 QUALITY ASSURANCE
A. FIRE-TEST-RESPONSE CHARACTERISTICS: INSULATION AND RELATED MATERIALS SHALL HAVE FIRE-TEST-RESPONSE CHARACTERISTICS INDICATED, AS DETERMINED BY TESTING IDENTICAL PRODUCTS PER ASTM E 84, BY A TESTING AND INSPECTING AGENCY ACCEPTABLE TO AUTHORITIES HAVING JURISDICTION. FACTORY LABEL INSULATION AND JACKET MATERIALS AND ADHESIVE, MASTIC, AND CEMENT MATERIAL CONTAINERS, WITH APPROPRIATE MARKINGS OF APPLICABLE TESTING AND INSPECTING AGENCY.
1. FLAME-SPREAD INDEX OF 25 OR LESS, AND SMOKE-DEVELOPED INDEX OF 50 OR LESS.

PART 2: PRODUCTS

2.1 MANUFACTURERS
A. MANUFACTURERS - INSULATION MATERIALS:
1. CERTAIN TEED CORP.
2. JOHNS MANVILLE.
3. KNAUF INSULATION.
4. OWENS CORNING.
B. MANUFACTURERS - INSULATING CEMENTS:
1. INSULCO, DIVISION OF MFS, INC.
2. P. K. INSULATION MFG. CO., INC.
3. ROCK WOOL MANUFACTURING COMPANY.
C. MANUFACTURERS - ADHESIVES, MASTICS, SEALANTS.
1. CHILDERS PRODUCTS, DIVISION OF ITW.
2. FOSTER PRODUCTS CORPORATION, H. B. FULLER COMPANY.
3. ITW TACC, DIVISION OF ILLINOIS TOOL WORKS.
4. MON-ECO INDUSTRIES.
5. VIMASCO CORPORATION.
D. MANUFACTURERS - FIELD-APPLIED CLOTHES.
1. ALPHA ASSOCIATES, INC. OR APPROVED EQUAL.
E. MANUFACTURERS - FIELD APPLIED JACKETS.
1. CHILDERS PRODUCTS, DIVISION OF ITW: METAL JACKETING SYSTEMS.
2. PABCO METALS CORPORATION; SUREFIT.
3. RPR PRODUCTS, INC.; INSUL-MATE.

2.2 INSULATION MATERIALS
A. MINERAL-FIBER BLANKET INSULATION: MINERAL OR GLASS FIBERS BONDED WITH A THERMOSETTING RESIN. COMPLY WITH ASTM C 553, TYPE II AND ASTM C 1290, TYPE III WITH FACTORY-APPLIED FSK JACKET.
B. MINERAL-FIBER BOARD INSULATION: MINERAL OR GLASS FIBERS BONDED WITH A THERMOSETTING RESIN. COMPLY WITH ASTM C 612, TYPE IA OR TYPE IB. FOR DUCT AND PLENUM APPLICATIONS, PROVIDE INSULATION WITH FACTORY-APPLIED FSK JACKET.
C. MINERAL-FIBER, PREFORMED PIPE INSULATION: TYPE I, 850 DEG F MATERIALS; MINERAL OR GLASS FIBERS BONDED WITH A THERMOSETTING RESIN. COMPLY WITH ASTM C 547, TYPE I, GRADE A, WITH FACTORY-APPLIED ASJ OR WITH FACTORY-APPLIED ASJ-SSL.
D. MINERAL-FIBER, PIPE AND TANK INSULATION: MINERAL OR GLASS FIBERS BONDED WITH A THERMOSETTING RESIN. SEMIRIGID BOARD MATERIAL WITH FACTORY-APPLIED ASJ COMPLYING WITH ASTM C 1393, TYPE II OR TYPE IIIA CATEGORY 2, OR WITH PROPERTIES SIMILAR TO ASTM C 612, TYPE IB. NOMINAL DENSITY IS 2.5 LB/CU. FT. OR MORE. THERMAL CONDUCTIVITY (K-VALUE) AT 100 DEG F IS 0.29 BTU-IN./(H-SQ. FT.-°F) OR LESS.

2.3 INSULATION CEMENTS
A. MINERAL-FIBER, HYDRAULIC-SETTING INSULATING AND FINISHING CEMENT: COMPLY WITH ASTM C 449/C 449M.

2.4 ADHESIVES
A. MATERIALS SHALL BE COMPATIBLE WITH INSULATION MATERIALS, JACKETS, AND SUBSTRATES AND FOR BONDING INSULATION TO ITSELF AND TO SURFACES TO BE INSULATED, UNLESS OTHERWISE INDICATED.
B. ASJ ADHESIVE, AND FSK JACKET ADHESIVE: COMPLY WITH MIL-A-3316C, CLASS 2, GRADE A FOR BONDING INSULATION JACKET LAP SEAMS AND JOINTS.
C. MINERAL-FIBER ADHESIVE: COMPLY WITH MIL-A-3316C, CLASS 2, GRADE A.

2.5 MASTICS
A. MATERIALS SHALL BE COMPATIBLE WITH INSULATION MATERIALS, JACKETS, AND SUBSTRATES: COMPLY WITH MIL-C-19565C, TYPE II.
B. VAPOR-BARRIER MASTIC: WATER BASED; SUITABLE FOR INDOOR AND OUTDOOR USE ON BELOW AMBIENT SERVICES. WATER-VAPOR PERMEANCE SHALL BE ASTM E 96, PROCEDURE B, 0.013 PERM AT 43-MIL DRY FILM THICKNESS. SERVICE TEMPERATURE RANGE SHALL BE MINUS 20 TO PLUS 180 DEG F. SOLIDS CONTENT SHALL BE ASTM D 1644, 59 PERCENT BY VOLUME AND 71 PERCENT BY WEIGHT. COLOR SHALL BE WHITE.
C. BREATHER MASTIC: WATER BASED; SUITABLE FOR INDOOR AND OUTDOOR USE ON ABOVE AMBIENT SERVICES. WATER-VAPOR PERMEANCE SHALL BE ASTM F 1249, 3 PERMS AT 0.0625-INCH DRY FILM THICKNESS. SERVICE TEMPERATURE RANGE SHALL BE MINUS 20 TO PLUS 200 DEG F. SOLIDS CONTENT SHALL BE 63 PERCENT BY VOLUME AND 73 PERCENT BY WEIGHT. COLOR SHALL BE WHITE.

2.6 SEALANTS
A. JOINT SEALANTS: MATERIALS SHALL BE COMPATIBLE WITH INSULATION MATERIALS, JACKETS, AND SUBSTRATES. PERMANENTLY FLEXIBLE, ELASTOMERIC SEALANT SERVICE TEMPERATURE RANGE SHALL BE MINUS 100 TO PLUS 300 DEG F. COLOR SHALL BE WHITE OR GRAY.
B. FSK AND METAL JACKET FLASHING SEALANTS: MATERIALS SHALL BE COMPATIBLE WITH INSULATION MATERIALS, JACKETS, AND SUBSTRATES. FIRE-AND WATER-RESISTANT, FLEXIBLE, ELASTOMERIC SEALANT. SERVICE TEMPERATURE RANGE SHALL BE MINUS 40 TO PLUS 250 DEG F. COLOR SHALL BE ALUMINUM.
C. ASJ FLASHING SEALANTS, AND VINYL, PVDC, AND PVC JACKET FLASHING SEALANTS: MATERIALS SHALL BE COMPATIBLE WITH INSULATION MATERIALS, JACKETS, AND SUBSTRATES. FIRE- AND WATER-RESISTANT, FLEXIBLE, ELASTOMERIC SEALANT. SERVICE TEMPERATURE RANGE SHALL BE MINUS 40 TO PLUS 250 DEG F. COLOR SHALL BE WHITE.

2.7 FACTORY-APPLIED JACKETS
A. INSULATION SYSTEM SCHEDULES INDICATE FACTORY-APPLIED JACKETS ON VARIOUS APPLICATIONS. WHEN FACTORY-APPLIED JACKETS ARE INDICATED, COMPLY WITH THE FOLLOWING:
1. FSK JACKET: ALUMINUM-FOIL, FIBERGLASS-REINFORCED SCRIM WITH KRAFT-PAPER BACKING; COMPLYING WITH ASTM C 1136, TYPE II.
2. ASJ: WHITE, KRAFT-PAPER, FIBERGLASS-REINFORCED SCRIM WITH ALUMINUM-FOIL BACKING; COMPLYING WITH ASTM C 1136, TYPE I.
3. ASJ-SSL: ASJ WITH SELF-SEALING, PRESSURE-SENSITIVE, ACRYLIC-BASED ADHESIVE COVERED BY A REMOVABLE PROTECTIVE STRIP; COMPLYING WITH ASTM C 1136, TYPE I.

2.8 FIELD-APPLIED CLOTHES
A. WOVEN GLASS-FIBER FABRIC: COMPLY WITH MIL-C-20079H, TYPE I, PLAIN WEAVE, AND PRESIZED A MINIMUM OF 8 OZ./SQ. YD.

2.9 FIELD-APPLIED JACKETS
A. FIELD-APPLIED JACKETS SHALL COMPLY WITH ASTM C 921, TYPE I, UNLESS OTHERWISE INDICATED.
B. ALUMINUM JACKET: COMPLY WITH ASTM B 209, ALLOY 3003, 3005, 3105 OR 5005, TEMPER H-14. SHEET AND ROLL STOCK SHALL BE READY FOR SHOP OR FIELD SIZING. FINISH AND THICKNESS ARE INDICATED IN FIELD-APPLIED JACKET SCHEDULES. MOISTURE BARRIER FOR INDOOR APPLICATIONS SHALL BE 1-MIL- THICK, HEAT-BONDED POLYETHYLENE AND KRAFT PAPER. MOISTURE BARRIER FOR OUTDOOR APPLICATIONS SHALL BE 3-MIL-THICK, HEAT-BONDED POLYETHYLENE AND KRAFT PAPER. FACTORY-FABRICATED FITTING COVERS SHALL BE:
1. SAME MATERIAL, FINISH, AND THICKNESS AS JACKET.
2. FIELD FABRICATE FITTING COVERS ONLY IF FACTORY-FABRICATED FITTING COVERS ARE NOT AVAILABLE.
3. PREFORMED 2-PIECE OR GORE, 45 AND 90 DEGREE, SHORT AND LONG RADIUS ELBOWS.
4. TEE COVERS.
5. FLANGE AND UNION COVERS.
6. END CAPS.
7. BEVELED COLLARS.
8. VALVE COVERS.
C. FSK JACKET: ALUMINUM-FOIL-FACE, FIBERGLASS-REINFORCED SCRIM WITH KRAFT-PAPER BACKING.
D. PVC JACKET: HIGH IMPACT RESISTANT, UV RESISTANT PVC COMPLYING WITH ASTM D 1784, CLASS 16354-C. ADHESIVE AS RECOMMENDED BY JACKET MATERIAL MANUFACTURER. WHITE IN COLOR.
1. FACTORY FABRICATED FITTING COVERS: PREFORMED SHAPES FOR ELBOWS, TEES, VALVES, FLANGES, UNIONS, REDUCERS, AND STRAINERS.

2.10 TAPES
A. FSK TAPE: FOIL-FACE, VAPOR-RETARDER TAPE MATCHING FACTORY-APPLIED JACKET WITH ACRYLIC ADHESIVE; COMPLYING WITH ASTM C 1136 AND UL LISTED. TAPE SHALL HAVE CHARACTERISTICS AS FOLLOWS: 3 INCH WIDTH, 6.5 MIL THICKNESS, 90 OUNCES FORCE/INCH IN WIDTH ADHESION, 2 PERCENT ELONGATION, AND 40 LBF/INCH IN WIDTH TENSILE STRENGTH.
B. ASJ TAPE: WHITE VAPOR-RETARDER TAPE MATCHING FACTORY-APPLIED JACKET WITH ACRYLIC ADHESIVE, COMPLYING WITH ASTM C 1136 AND UL LISTED. TAPE SHALL HAVE CHARACTERISTICS AS FOLLOWS: 3 INCH WIDTH, 11.5 MILS THICKNESS, 90 OUNCES FORCE/INCH IN WIDTH ADHESION, 2 PERCENT ELONGATION, AND 40 LBF/INCH IN WIDTH TENSILE STRENGTH.
C. ALUMINUM-FOIL TAPE: VAPOR-RETARDER TAPE WITH ACRYLIC ADHESIVE AND UL LISTED. TAPE SHALL HAVE CHARACTERISTICS AS FOLLOWS: 2 INCH WIDTH, 3.7 MILS THICKNESS, 100 OUNCES FORCE/INCH IN WIDTH ADHESION, 5 PERCENT ELONGATION, AND 34 LBF/INCH IN WIDTH TENSILE STRENGTH.

2.11 SECUREMENTS
A. ALUMINUM BANDS: ASTM B 209, ALLOY 3003, 3005, 3105, OR 5005; TEMPER H-14, 0.020 INCH THICK, 3/4 INCH WIDE WITH WING SEAL.
B. METAL, ADHESIVELY ATTACHED, PERFORATED-BASE INSULATION HANGERS: BASEPLATE WELDED TO PROJECTING SPINDLE THAT IS CAPABLE OF HOLDING INSULATION, OF THICKNESS INDICATED, SECURELY IN POSITION INDICATED WHEN SELF-LOCKING WASHER IS IN PLACE. COMPLY WITH THE FOLLOWING REQUIREMENTS:
1. BASEPLATE: PERFORATED, GALVANIZED CARBON-STEEL SHEET, 0.030 INCH THICK BY 2 INCHES SQUARE.
2. SPINDLE: COPPER- OR ZINC-COATED, LOW CARBON STEEL, FULLY ANNEALED, 0.106-INCH- DIAMETER SHANK, LENGTH TO SUIT DEPTH OF INSULATION INDICATED.
3. ADHESIVE: RECOMMENDED BY HANGER MANUFACTURER. PRODUCT WITH DEMONSTRATED CAPABILITY TO BOND INSULATION HANGER SECURELY TO SUBSTRATES INDICATED WITHOUT DAMAGING INSULATION, HANGERS, AND SUBSTRATES.
C. INSULATION-RETAINING WASHERS: SELF-LOCKING WASHERS FORMED FROM 0.016-INCH- THICK, GALVANIZED-STEEL SHEET, WITH BEVELED EDGE SIZED AS REQUIRED TO HOLD INSULATION SECURELY IN PLACE BUT NOT LESS THAN 1-1/2 INCHES IN DIAMETER.
1. PROTECT ENDS WITH CAPPED SELF-LOCKING WASHERS INCORPORATING A SPRING STEEL INSERT TO ENSURE PERMANENT RETENTION OF CAP IN EXPOSED LOCATIONS.
D. STAPLES: OUTWARD-CLINCHING INSULATION STAPLES, NOMINAL 3/4-INCH- WIDE, STAINLESS STEEL OR MONEL.
E. WIRE: 0.062-INCH SOFT-ANNEALED, STAINLESS STEEL.

2.12 CORNER ANGLES
A. ALUMINUM CORNER ANGLES: 0.040 INCH THICK, MINIMUM 1 BY 1 INCH, ALUMINUM ACCORDING TO ASTM B 209, ALLOY 3003, 3005, 3105 OR 5005; TEMPER H-14.

PART 3: EXECUTION

3.1 DUCT AND PLENUM INSULATION INSTALLATION
A. BLANKET INSULATION INSTALLATION ON DUCTS AND PLENUMS: SECURE WITH INSULATION PINS.
1. INSTALL EITHER CAPACITOR-DISCHARGE-WELD PINS AND SPEED WASHERS OR CUPPED-HEAD, CAPACITOR-DISCHARGE-WELD PINS ON SIDES AND BOTTOM OF HORIZONTAL DUCTS AND SIDES OF VERTICAL DUCTS AS FOLLOWS:
a. ON DUCT SIDES WITH DIMENSIONS LARGER THAN 18 INCHES, PLACE PINS 12 INCHES O.C. EACH WAY, AND 3 INCHES MAXIMUM FROM INSULATION JOINTS. INSTALL ADDITIONAL PINS TO HOLD INSULATION TIGHTLY AGAINST SURFACE AT CROSS BRACING. PINS MAY BE OMITTED FROM TOP SURFACE OF HORIZONTAL, RECTANGULAR DUCTS AND PLENUMS.
b. DO NOT OVERCOMPRESS INSULATION DURING INSTALLATION.
c. IMPALE INSULATION OVER PINS AND ATTACH SPEED WASHERS. CUT EXCESS PORTION OF PINS EXTENDING BEYOND SPEED WASHERS OR BEND PARALLEL WITH INSULATION SURFACE. COVER EXPOSED PINS AND WASHERS WITH TAPE MATCHING INSULATION FACING.
2. INSTALL INSULATION ON RECTANGULAR DUCT ELBOWS AND TRANSITIONS WITH A FULL INSULATION SECTION FOR EACH SURFACE.
3. INSULATE DUCT STIFFENERS, HANGERS, AND FLANGES THAT PROTRUDE BEYOND INSULATION SURFACE WITH 6 INCH-WIDE STRIPS OF SAME MATERIAL USED TO INSULATE DUCT. SECURE ON ALTERNATING SIDES OF STIFFENER, HANGER, AND FLANGE WITH PINS SPACED 6 INCHES O.C.
B. BOARD INSULATION INSTALLATION ON DUCTS AND PLENUMS: SECURE WITH INSULATION PINS.
1. INSTALL EITHER CAPACITOR-DISCHARGE-WELD PINS AND SPEED WASHERS OR CUPPED-HEAD, CAPACITOR-DISCHARGE-WELD PINS ON SIDES AND BOTTOM OF HORIZONTAL DUCTS AND SIDES OF VERTICAL DUCTS AS FOLLOWS:
a. ON DUCT SIDES WITH DIMENSIONS 18 INCHES AND SMALLER, PLACE PINS ALONG LONGITUDINAL CENTERLINE OF DUCT. SPACE 3 INCHES MAXIMUM FROM INSULATION END JOINTS, AND 12 INCHES O.C.
b. ON DUCT SIDES WITH DIMENSIONS LARGER THAN 18 INCHES, SPACE PINS 12 INCHES O.C. EACH WAY, AND 3 INCHES MAXIMUM FROM INSULATION JOINTS. INSTALL ADDITIONAL PINS TO HOLD INSULATION TIGHTLY AGAINST SURFACE AT CROSS BRACING.
c. PINS MAY BE OMITTED FROM TOP SURFACE OF HORIZONTAL, RECTANGULAR DUCTS AND PLENUMS.
d. DO NOT OVERCOMPRESS INSULATION DURING INSTALLATION.
e. CUT EXCESS PORTION OF PINS EXTENDING BEYOND SPEED WASHERS OR BEND PARALLEL WITH INSULATION SURFACE. COVER EXPOSED PINS AND WASHERS WITH TAPE MATCHING INSULATION FACING.
2. INSTALL INSULATION ON RECTANGULAR DUCT ELBOWS AND TRANSITIONS WITH A FULL INSULATION SECTION FOR EACH SURFACE. GROOVE AND SCORE INSULATION TO FIT AS CLOSELY AS POSSIBLE TO OUTSIDE AND INSIDE RADIUS OF ELBOWS.
3. INSULATE DUCT STIFFENERS, HANGERS, AND FLANGES THAT PROTRUDE BEYOND INSULATION SURFACE WITH 6-INCH-WIDE STRIPS OF SAME MATERIAL USED TO INSULATE DUCT. SECURE ON ALTERNATING SIDES OF STIFFENER, HANGER, AND FLANGE WITH PINS SPACED 6 INCHES O.C.
C. VAPOR BARRIER FOR DUCTS AND PLENUM INSULATION
1. FOR DUCTS AND PLENUMS WITH SURFACE TEMPERATURES BELOW AMBIENT, INSTALL A CONTINUOUS UNBROKEN VAPOR BARRIER. CREATE A FACING LAP FOR LONGITUDINAL SEAMS AND END JOINTS WITH INSULATION BY REMOVING 3 INCHES FROM 1 EDGE AND 1 END OF INSULATION SEGMENT. SECURE LAPS TO ADJACENT INSULATION SECTION WITH 1/2-INCH OUTWARD-CLINCHING STAPLES, 1 INCH O.C. INSTALL VAPOR BARRIER CONSISTING OF FACTORY- OR FIELD-APPLIED JACKET, ADHESIVE, VAPOR-BARRIER MASTIC, AND SEALANT AT JOINTS, SEAMS, AND PROTRUSIONS.
a. REPAIR PUNCTURES, TEARS, AND PENETRATIONS WITH TAPE OR MASTIC TO MAINTAIN VAPOR-BARRIER SEAL.
b. INSTALL VAPOR STOPS FOR DUCTWORK AND PLENUMS OPERATING BELOW 50 DEG F AT 18-FOOT INTERVALS. VAPOR STOPS SHALL CONSIST OF VAPOR-BARRIER MASTIC APPLIED IN A Z-SHAPED PATTERN OVER INSULATION FACE, ALONG BUTT END OF INSULATION, AND OVER THE SURFACE. COVER INSULATION FACE AND SURFACE TO BE INSULATED A WIDTH EQUAL TO 2 TIMES THE INSULATION THICKNESS BUT NOT LESS THAN 3 INCHES.

3.2 PIPE INSULATION
A. SHALL BE APPLIED IN ACCORDANCE WITH MANUFACTURER'S INSTRUCTIONS, INCLUDING COVERAGE RATES, MASTICS, ADHESIVES AND COATINGS TO BE USED. INSULATION SHALL BE APPLIED TO PROVIDE FULL INSULATION THICKNESS ON ALL SURFACES, INCLUDING CORNERS AND BENDS.
B. INSULATION SHALL BE APPLIED TO CLEAN, DRY SURFACES. REMOVE ALL MILL SCALE, GREASE OR DIRT. INSULATION SHALL NOT BE APPLIED TO PIPING AND EQUIPMENT UNTIL ALL REQUIRED TESTING HAS BEEN COMPLETED AND ALL NECESSARY REPAIRS HAVE BEEN MADE.
C. INSTALL PIPING INSULATION MATERIALS AFTER PIPING HAS BEEN TESTED AND APPROVED. CONTINUE INSULATION WITH VAPOR BARRIER THROUGH PENETRATIONS. IN EXPOSED PIPING, LOCATE INSULATION AND COVER SEAMS IN LEAST VISIBLE LOCATIONS. NEATLY FINISH INSULATION AT SUPPORTS, PROTRUSIONS AND INTERRUPTIONS. PIPE INSULATION SHALL BE INSTALLED WITH JOINTS BUTTED FIRMLY TOGETHER. NO EXCEPTIONS.
D. MATERIALS SHALL BE APPLIED BY A QUALIFIED INSULATION APPLICATOR / WORKMAN SKILLED IN THIS TRADE. INSULATION SHALL BE INSTALLED IN ACCORDANCE WITH THE MANUFACTURER'S WRITTEN INSTRUCTIONS AND IN ACCORDANCE WITH RECOGNIZED INDUSTRY STANDARDS. MECHANICAL FASTENERS SHALL BE USED WHENEVER POSSIBLE TO ASSURE PERMANENT CONSTRUCTION. UNSIGHTLY WORK SHALL BE A CAUSE FOR REJECTION.
E. NON-COMPRESSIBLE INSULATION MATERIAL SHALL BE INSTALLED AT HANGER SUPPORTS TO PREVENT DAMAGE TO INSULATION AND VAPOR BARRIER.
F. MINIMUM THICKNESS OF INSULATION SHALL BE AS SCHEDULED; HOWEVER, SUFFICIENT INSULATION SHALL BE PROVIDED TO ELIMINATE CONDENSATION ON COLD SURFACES, AND TO MAINTAIN A MAXIMUM EXTERIOR INSULATION SURFACE TEMPERATURE OF 125 DEG. FOR HOT PIPING.
G. COVER ALL VALVES, STRAINERS, UNIONS, FLANGES AND FITTINGS WITH PVC FITTING COVERS.
H. INSTALL PROTECTIVE METAL SHIELDS WHERE PIPE HANGERS BEAR ON THE OUTSIDE OF INSULATION. PROVIDE WOOD BLOCKING FROM THE SHIELD THROUGH THE INSULATION OR O.C. KAYLO (MINIMUM 24" LONG) TO PREVENT CRUSHING OF THE INSULATION.

3.3 FIELD-APPLIED CLOTHS
A. WHERE WOVEN GLASS-FIBER FABRIC IS INDICATED, INSTALL AS FOLLOWS: BRUSH ON INSULATING CEMENT OVER ENTIRE SURFACE AND COVER WITH WOVEN GLASS-FIBER FABRIC. FABRIC SHALL BE DRAWN TIGHT SO SURFACE IS SMOOTH AND WITHOUT WRINKLES. BRUSH ON A TOP LAYER OF INSULATING CEMENT OVER THE ENTIRE AREA.

3.4 FIELD-APPLIED JACKET INSTALLATION
A. WHERE METAL JACKETS ARE INDICATED, INSTALL WITH 2-INCH OVERLAP AT LONGITUDINAL SEAMS AND END JOINTS. OVERLAP LONGITUDINAL SEAMS ARRANGED TO SHED WATER. SEAL END JOINTS WITH WEATHERPROOF SEALANT RECOMMENDED BY INSULATION MANUFACTURER. SECURE JACKET WITH STAINLESS-STEEL BANDS 12 INCHES O.C. AND AT END JOINTS.

3.5 FIELD QUALITY CONTROL
A. PERFORM THE FOLLOWING FIELD TESTS AND INSPECTIONS:
3. INSPECT DUCTWORK, RANDOMLY SELECTED BY ENGINEER, BY REMOVING FIELD-APPLIED JACKET AND INSULATION IN LAYERS IN REVERSE ORDER OF THEIR INSTALLATION. EXTENT OF INSPECTION SHALL BE LIMITED TO TWO LOCATIONS FOR EACH DUCT SYSTEM DEFINED IN THE "DUCT INSULATION SCHEDULE, GENERAL" ARTICLE.
B. ALL INSULATION APPLICATIONS WILL BE CONSIDERED DEFECTIVE WORK IF SAMPLE INSPECTION REVEALS NONCOMPLIANCE WITH REQUIREMENTS. REMOVE DEFECTIVE WORK.
C. INSTALL NEW INSULATION AND JACKETS TO REPLACE INSULATION AND JACKETS REMOVED FOR INSPECTION. REPEAT INSPECTION PROCEDURES AFTER NEW MATERIALS ARE INSTALLED.

3.6 DUCT AND PLENUM INSULATION SCHEDULE
A. PLENUMS AND DUCTS REQUIRING INSULATION: SEE DUCT INSULATION SCHEDULE.
B. ITEMS NOT INSULATED:
1. FACTORY-INSULATED FLEXIBLE DUCTS.
2. FACTORY-INSULATED PLENUMS AND CASINGS.
3. FLEXIBLE CONNECTORS.
4. VIBRATION-CONTROL DEVICES.
5. FACTORY-INSULATED ACCESS PANELS AND DOORS.

3.7 FIELD-APPLIED JACKET SCHEDULE
A. INSTALL JACKET OVER INSULATION MATERIAL. FOR INSULATION WITH FACTORY-APPLIED JACKET, INSTALL THE FIELD-APPLIED JACKET OVER THE FACTORY-APPLIED JACKET.
B. DUCTS AND PLENUMS, EXPOSED IN MECHANICAL EQUIPMENT ROOMS AND OTHER NON-CONDITIONED AREAS:
1. WOVEN GLASS-FIBER FABRIC WITH INSULATING CEMENT.
C. DUCTS AND PLENUMS, EXPOSED IN AIR-CONDITIONED AREAS:
1. WOVEN GLASS-FIBER FABRIC WITH INSULATING CEMENT.
D. DUCTS AND PLENUMS, EXPOSED OUTDOORS:
1. WOVEN GLASS-FIBER FABRIC WITH INSULATING CEMENT. ALUMINUM, SMOOTH, 0.016 INCH THICK.

SECTION 230900 - HVAC INSTRUMENTATION AND CONTROLS FOR HVAC
PART 1: GENERAL

1.1 SUMMARY
A. HVAC CONTROLS: CONTROL WIRING, TEMPERATURE SENSORS, THERMOSTATS, CONTROL VALVES AND CONTROL DEVICES SHOWN ON DRAWINGS TO BE PROVIDED BY HVAC/MECHANICAL CONTRACTOR. HVAC CONTRACTOR SHALL PROGRAM MICRO PROCESSOR CONTROLS ON HVAC EQUIPMENT DURING START-UP. ALL HVAC CONTROL DEVICES SHALL BE FIELD MOUNTED BY CONTRACTOR.

1.2 SUBMITTALS
A. PRODUCT DATA: INCLUDE MANUFACTURER'S TECHNICAL LITERATURE FOR EACH CONTROL DEVICE. INDICATE DIMENSIONS, CAPACITIES, PERFORMANCE CHARACTERISTICS, ELECTRICAL CHARACTERISTICS, FINISHES FOR MATERIALS, AND INSTALLATION AND STARTUP INSTRUCTIONS FOR EACH TYPE OF PRODUCT INDICATED. PROVIDE BILL OF MATERIALS OF EQUIPMENT INDICATING QUANTITY, MANUFACTURER, AND MODEL NUMBER.
B. SHOP DRAWINGS: DETAIL EQUIPMENT ASSEMBLIES AND INDICATED DIMENSIONS, WEIGHTS, LOADS, REQUIRED CLEARANCES, METHOD OF FIELD ASSEMBLY, COMPONENTS, AND LOCATION AND SIZE OF EACH FIELD CONNECTION.
1. SCHEMATIC FLOW DIAGRAMS, SHOWING FANS, PUMPS, COILS, DAMPERS, VALVES, AND CONTROL DEVICES.
2. WIRING DIAGRAMS: POWER, SIGNAL, AND CONTROL WIRING.
3. DETAILS OF CONTROL PANEL FACES, INCLUDING CONTROLS, INSTRUMENTS, AND LABELING.
4. WRITTEN DESCRIPTION OF SEQUENCE OF OPERATION.
5. SCHEDULE OF VALVES INCLUDING FLOW CHARACTERISTICS.
6. CONTROLLED SYSTEMS: SCHEMATICS DIAGRAMS OF EACH CONTROLLED SYSTEM WITH CONTROL POINTS LABELED AND CONTROL ELEMENTS GRAPHICALLY SHOWN, WITH WIRING.
C. OPERATION AND MAINTENANCE DATA: FOR HVAC INSTRUMENTATION AND CONTROL SYSTEM TO INCLUDE IN EMERGENCY, OPERATION, AND MAINTENANCE MANUALS.

1.3 QUALITY ASSURANCE
A. HVAC CONTROLS (CARRIER): VERIFY PROPER OPERATION OF CONTROLS ON EXISTING VAV BOXES AND TEMPERATURE SENSORS PRIOR TO ANY DEMOLITION WORK. ADVISE ENGINEER OF ANY C

2.3 STEEL PIPE AND FITTINGS
A. STEEL PIPE, NPS 2 AND SMALLER: ASTM A 53, TYPE S (SEAMLESS) OR TYPE F (FURNACE-BUTT WELDED), GRADE B, SCHEDULE 40, BLACK STEEL, PLAIN ENDS.
B. STEEL PIPE, NPS 2-1/2 THROUGH NPS 12: ASTM A 53, TYPE E (ELECTRIC-RESISTANCE WELDED), GRADE B, SCHEDULE 40, BLACK STEEL, PLAIN ENDS.
C. STEEL PIPE NIPPLES: ASTM A 733, MADE OF ASTM A 53, SCHEDULE 40, BLACK STEEL; SEAMLESS FOR NPS 2 AND SMALLER AND ELECTRIC-RESISTANCE WELDED FOR NPS 2-1/2 AND LARGER.
D. MALLEABLE-IRON THREADED FITTINGS: ASME B16.3, CLASSES 150 AND 300.
E. MALLEABLE-IRON UNIONS: ASME B16.39; CLASSES 150, 250, AND 300.
F. WROUGHT-STEEL FITTINGS: ASTM A 234/A 234M, WALL THICKNESS TO MATCH ADJOINING PIPE.
G. WROUGHT CAST-AND FORGED-STEEL FLANGES AND FLANGED FITTINGS: ASME B16.5, INCLUDING BOLTS, NUTS, AND GASKETS OF THE FOLLOWING MATERIAL GROUP, END CONNECTIONS, AND FACINGS:
1. MATERIAL GROUP: 1.1.
2. END CONNECTIONS: BUTT WELDING.
3. FACINGS: RAISED FACE.
H. WELDING MATERIALS: COMPLY WITH SECTION II, PART C, OF THE ASME BOILER AND PRESSURE VESSEL CODE FOR WELDING MATERIALS APPROPRIATE FOR WALL THICKNESS AND FOR CHEMICAL ANALYSIS OF PIPE BEING WELDED.
I. GASKET MATERIAL: THICKNESS, MATERIAL, AND TYPE SUITABLE FOR FLUID TO BE HANDLED; AND DESIGN TEMPERATURES AND PRESSURES.

2.4 PLASTIC PIPE AND FITTINGS
A. PVC PLASTIC PIPE: ASTM D 1785, SCHEDULES 40 AND 80, PLAIN ENDS.
B. PVC PLASTIC PIPE FITTINGS: SOCKET-TYPE PIPE FITTINGS, ASTM D 2466 FOR SCHEDULE 40 PIPE; ASTM D 2467 FOR SCHEDULE 80 PIPE.
1. PVC SOLVENT CEMENT: ASTM D 2564.

2.5 VALVES
A. CALIBRATED BALANCING VALVES, NPS 2 AND SMALLER: BRONZE BODY, BALL TYPE, 125-PSIG WORKING PRESSURE, 250 DEG F MAXIMUM OPERATING TEMPERATURE, AND HAVING THREADED ENDS. VALVES SHALL HAVE CALIBRATED ORIFICE OR VENTURI, CONNECTIONS FOR PORTABLE DIFFERENTIAL PRESSURE METER WITH INTEGRAL SEALS, AND BE EQUIPPED WITH A MEMORY STOP TO RETAIN SET POSITION.
B. CALIBRATED BALANCING VALVES, NPS 2-1/2 AND LARGER: CAST-IRON OR STEEL BODY, BALL TYPE, 125-PSIG WORKING PRESSURE, 250 DEG F MAXIMUM OPERATING TEMPERATURE, AND HAVING FLANGED OR GROOVED CONNECTIONS. VALVES SHALL HAVE CALIBRATED ORIFICE OR VENTURI, CONNECTIONS FOR PORTABLE DIFFERENTIAL PRESSURE METER WITH INTEGRAL SEALS, AND BE EQUIPPED WITH A MEMORY STOP TO RETAIN SET POSITION.
C. AUTOMATIC FLOW-CONTROL VALVES: FACTORY SET TO MAINTAIN CONSTANT FLOW WITH PLUS OR MINUS 5 PERCENT OVER SYSTEM PRESSURE FLUCTUATIONS. EACH VALVE SHALL HAVE AN IDENTIFICATION TAG ATTACHED BY CHAIN, AND BE FACTORY MARKED WITH THE ZONE IDENTIFICATION, VALVE NUMBER, AND FLOW RATE. VALVE SHALL BE LINE SIZE OF THE FOLLOWING DESIGN:
1. COMBINATION ASSEMBLIES, INCLUDING BRASS BODY, DESIGNED FOR 275 PSIG AT 250 DEG F WITH STAINLESS STEEL, TAMPERPROOF, SELF-CLEANING, PISTON-SPRING ASSEMBLY EASILY REMOVABLE FOR INSPECTION OR REPLACEMENT. ASSEMBLY SHALL HAVE TWO PRESSURE AND TEMPERATURE TEST VALVES. BALL VALVES SHALL HAVE STAINLESS STEEL BALL AND STEM.

2.6 HYDRONIC SPECIALTIES
A. MANUAL AIR VENT: BRONZE BODY AND NONFERROUS INTERNAL PARTS; 150-PSIG WORKING PRESSURE; 225 DEG F OPERATING TEMPERATURE; MANUALLY OPERATED WITH SCREWDRIVER OR THUMBSCREW; WITH NPS 1/8 DISCHARGE CONNECTION AND NPS 1/2 INLET CONNECTION.
B. AUTOMATIC AIR VENT: DESIGNED TO VENT AUTOMATICALLY WITH FLOAT PRINCIPLE; BRONZE BODY AND NONFERROUS INTERNAL PARTS; 150-PSIG WORKING PRESSURE; 240 DEG F OPERATING TEMPERATURE; WITH NPS 1/4 DISCHARGE CONNECTION AND NPS 1/2 INLET CONNECTION.
C. Y-PATTERN STRAINERS: 125-PSIG WORKING PRESSURE; CAST-IRON BODY (ASTM A 126, CLASS B), FLANGED ENDS FOR NPS 2-1/2 AND LARGER, THREADED CONNECTIONS FOR NPS 2 AND SMALLER, BOLTED COVER, PERFORATED STAINLESS-STEEL SCREEN, AND BLOW-OFF CONNECTION.

PART 3: EXECUTION

3.1 VALVE APPLICATIONS
A. GENERAL-DUTY VALVE APPLICATIONS: UNLESS OTHERWISE INDICATED, USE THE FOLLOWING VALVE TYPES:
1. SHUTOFF DUTY: BALL AND BUTTERFLY VALVES.
2. THROTTLING DUTY: GLOBE, BALL, AND BUTTERFLY VALVES.
B. INSTALL SHUTOFF DUTY VALVES AT EACH BRANCH CONNECTION TO SUPPLY MAINS, AT SUPPLY CONNECTION TO EACH PIECE OF EQUIPMENT, UNLESS ONLY ONE PIECE OF EQUIPMENT IS CONNECTED IN THE BRANCH LINE. INSTALL THROTTLING DUTY VALVES AT RETURN CONNECTIONS TO EACH PIECE OF EQUIPMENT WHEN AUTOMATIC FLOW CONTROL VALVES ARE NOT INDICATED, AND ELSEWHERE AS INDICATED.

3.2 PIPING APPLICATIONS
A. REFER TO PIPING APPLICATION CHART.

3.3 PIPING INSTALLATIONS
A. INSTALL DRAINS, CONSISTING OF A TEE FITTING, NPS 3/4 BALL VALVE, AND SHORT NPS 3/4 THREADED NIPPLE WITH CAP, AT LOW POINTS IN PIPING SYSTEM MAINS AND ELSEWHERE AS REQUIRED FOR SYSTEM DRAINAGE.

3.4 HANGERS AND SUPPORTS
A. INSTALL HANGERS FOR DRAWN-TEMPER COPPER PIPING WITH THE MAXIMUM SPACING AND MINIMUM ROD SIZES AS INDICATED ON THE DRAWINGS.
B. PLASTIC PIPING HANGER SPACING; SPACE HANGERS AND SUPPORTS ACCORDING TO PIPE MANUFACTURER'S WRITTEN INSTRUCTIONS FOR SERVICE CONDITIONS. AVOID POINT LOADING. SPACE AND INSTALL HANGERS WITH THE FEWEST PRACTICAL RIGID ANCHOR POINTS.

3.5 HYDRONIC SPECIALTIES INSTALLATION
A. INSTALL MANUAL AIR VENTS AT HIGH POINTS IN PIPING, AT HEAT-TRANSFER COILS, AND ELSEWHERE AS REQUIRED FOR SYSTEM AIR VENTING.
B. INSTALL AUTOMATIC AIR VENTS IN MECHANICAL EQUIPMENT ROOMS ONLY AT HIGH POINTS OF SYSTEM PIPING, AT HEAT-TRANSFER COILS, AND ELSEWHERE AS REQUIRED FOR SYSTEM AIR VENTING.

3.6 TERMINAL EQUIPMENT CONNECTION
A. INSTALL PORTS FOR PRESSURE AND TEMPERATURE GAGES AT COIL INLET CONNECTIONS.

3.7 FIELD QUALITY CONTROL
A. PREPARE HYDRONIC PIPING ACCORDING TO ASME B31.9 AND AS FOLLOWS:
1. LEAVE JOINTS, INCLUDING WELDS, UNINSULATED AND EXPOSED FOR EXAMINATION DURING TEST.
2. PROVIDE TEMPORARY RESTRAINTS FOR EXPANSION JOINTS THAT CANNOT SUSTAIN REACTIONS DUE TO TEST PRESSURE. IF TEMPORARY RESTRAINTS ARE IMPRACTICAL, ISOLATE EXPANSION JOINTS FROM TESTING.
3. FLUSH SYSTEM WITH CLEAN WATER. CLEAN STRAINERS.
4. ISOLATE EQUIPMENT FROM PIPING. IF A VALVE IS USED TO ISOLATE EQUIPMENT, ITS CLOSURE SHALL BE CAPABLE OF SEALING AGAINST TEST PRESSURE WITHOUT DAMAGE TO VALVE. INSTALL BLINDS IN FLANGED JOINTS TO ISOLATE EQUIPMENT.
5. INSTALL SAFETY VALVE, SET AT A PRESSURE NO MORE THAN ONE-THIRD HIGHER THAN TEST PRESSURE, TO PROTECT AGAINST DAMAGE BY EXPANDING LIQUID OR OTHER SOURCE OF OVERPRESSURE DURING TEST.
B. PERFORM THE FOLLOWING TESTS ON HYDRONIC PIPING:
1. USE AMBIENT TEMPERATURE WATER AS A TESTING MEDIUM UNLESS THERE IS RISK OF DAMAGE DUE TO FREEZING. ANOTHER LIQUID THAT IS SAFE FOR WORKERS AND COMPATIBLE WITH PIPING MAY BE USED.
2. WHILE FILLING SYSTEM, USE VENTS INSTALLED AT HIGH POINTS OF SYSTEM TO RELEASE TRAPPED AIR. USE DRAINS INSTALLED AT LOW POINTS FOR COMPLETE DRAINING OF LIQUID.
3. CHECK EXPANSION TANKS TO DETERMINE THAT THEY ARE NOT AIR BOUND AND THAT SYSTEM IS FULL OF WATER.
4. SUBJECT PIPING SYSTEM TO HYDROSTATIC TEST PRESSURE THAT IS NOT LESS THAN 1.5 TIMES THE DESIGN PRESSURE. TEST PRESSURE SHALL NOT EXCEED MAXIMUM PRESSURE FOR ANY VESSEL, PUMP, VALVE, OR OTHER COMPONENT IN SYSTEM UNDER TEST. VERIFY THAT STRESS DUE TO PRESSURE AT BOTTOM OF VERTICAL RUNS DOES NOT EXCEED EITHER 90 PERCENT OF SPECIFIED MINIMUM YIELD STRENGTH OR 1.7 TIMES "SE" VALUE IN APPENDIX A OF ASME B31.9, "BUILDING SERVICES PIPING."
5. AFTER HYDROSTATIC TEST PRESSURE HAS BEEN APPLIED FOR AT LEAST 10 MINUTES, EXAMINE PIPING, JOINTS, AND CONNECTIONS FOR LEAKAGE. ELIMINATE LEAKS BY TIGHTENING, REPAIRING, OR REPLACING COMPONENTS, AND REPEAT HYDROSTATIC TEST UNTIL THERE ARE NO LEAKS.

3.8 ADJUSTING
A. MARK CALIBRATED NAMEPLATES OF PUMP DISCHARGE VALVES AFTER HYDRONIC SYSTEM BALANCING HAS BEEN COMPLETED, TO PERMANENTLY INDICATE FINAL BALANCED POSITION.
B. PERFORM THESE ADJUSTMENTS BEFORE OPERATING THE SYSTEM:
1. OPEN VALVES TO FULLY OPEN POSITION. CLOSE COIL BYPASS VALVES.
2. CHECK PUMP FOR PROPER DIRECTION OF ROTATION.
3. SET AUTOMATIC FILL VALVES FOR REQUIRED SYSTEM PRESSURE.
4. CHECK AIR VENTS AT HIGH POINTS OF SYSTEM AND DETERMINE IF ALL ARE INSTALLED AND OPERATING FREELY (AUTOMATIC TYPE), OR BLEED AIR COMPLETELY (MANUAL TYPE).
5. SET TEMPERATURE CONTROLS SO ALL COILS ARE CALLING FOR FULL FLOW.
6. CHECK OPERATION OF AUTOMATIC BYPASS VALVES.
7. CHECK AND SET OPERATING TEMPERATURES OF HEAT EXCHANGERS TO DESIGN REQUIREMENTS.
8. LUBRICATE MOTORS AND BEARINGS.

3.9 CLEANING
A. FLUSH HYDRONIC PIPING SYSTEMS WITH CLEAN WATER. REMOVE AND CLEAN OR REPLACE STRAINER SCREENS. AFTER CLEANING AND FLUSHING HYDRONIC PIPING SYSTEMS, BUT BEFORE BALANCING, REMOVE DISPOSABLE FINE-MESH STRAINERS IN PUMP SUCTION DIFFUSERS.

SECTION 233113 - METAL DUCTS
PART 1: GENERAL

1.1 SUMMARY
A. THIS SECTION INCLUDES METAL DUCTS FOR SUPPLY, RETURN, OUTSIDE, AND EXHAUST AIR-DISTRIBUTION SYSTEMS IN PRESSURE CLASSES FROM MINUS 2- TO PLUS 10-INCH WG. METAL DUCTS INCLUDE THE FOLLOWING:
1. RECTANGULAR DUCTS AND FITTINGS.
2. SINGLE-WALL, ROUND, AND FLAT-OVAL SPIRAL-SEAM DUCTS AND FORMED FITTINGS.

1.2 SYSTEM DESCRIPTION
A. DUCT SYSTEM DESIGN, AS INDICATED, HAS BEEN USED TO SELECT SIZE AND TYPE OF AIR-MOVING AND AIR-DISTRIBUTION EQUIPMENT AND OTHER AIR SYSTEM COMPONENTS. CHANGES TO LAYOUT OR CONFIGURATION OF DUCT SYSTEM MUST BE SPECIFICALLY APPROVED IN WRITING BY ENGINEER. ACCOMPANY REQUESTS FOR LAYOUT MODIFICATIONS WITH CALCULATIONS SHOWING THAT PROPOSED LAYOUT WILL PROVIDE ORIGINAL DESIGN RESULTS WITHOUT INCREASING SYSTEM TOTAL PRESSURE.

1.3 SUBMITTALS
A. PRODUCT DATA: SUBMIT PRODUCT DATA ON MANUFACTURED DUCTS AND FITTINGS.

1.4 QUALITY ASSURANCE
A. WELDING: QUALIFY PROCEDURES AND PERSONNEL ACCORDING TO AWS D1.1, "STRUCTURAL WELDING CODE--STEEL," FOR HANGERS AND SUPPORTS; AWS D1.2, "STRUCTURAL WELDING CODE--ALUMINUM," FOR ALUMINUM SUPPORTING MEMBERS; AND AWS D9.1, "SHEET METAL WELDING CODE," FOR DUCT JOINT AND SEAM WELDING.
B. NFPA COMPLIANCE:
1. NFPA 90A, "INSTALLATION OF AIR CONDITIONING AND VENTILATING SYSTEMS."
2. NFPA 90B, "INSTALLATION OF WARM AIR HEATING AND AIR CONDITIONING SYSTEMS."

PART 2: PRODUCTS

2.1 MANUFACTURERS
A. TRANSVERSE JOINTS:
1. DUCTMATE INDUSTRIES, INC.
2. NEXUS INC.
3. WARD INDUSTRIES, INC.
B. FORMED-ON FLANGES;
1. DUCTMATE INDUSTRIES, INC.
2. LOCKFORMER.
C. ROUND AND FLAT OVAL DUCT AND FITTINGS:
1. MCGILL AIRFLOW CORPORATION.
2. SEMCO INCORPORATED.

2.2 SHEET METAL MATERIALS
A. COMPLY WITH SMACNA'S "HVAC DUCT CONSTRUCTION STANDARDS--METAL AND FLEXIBLE" FOR ACCEPTABLE MATERIALS, MATERIAL THICKNESSES, AND DUCT CONSTRUCTION METHODS, UNLESS OTHERWISE INDICATED. SHEET METAL MATERIALS SHALL BE FREE OF PITTING, SEAM MARKS, ROLLER MARKS, STAINS, DISCOLORATIONS, AND OTHER IMPERFECTIONS.
B. GALVANIZED SHEET STEEL: ASTM A 653/A 653M, LOCK-FORMING QUALITY, G60 COATING DESIGNATION; MILL-PHOSPHATIZED FINISH FOR SURFACES EXPOSED TO VIEW.
C. CARBON-STEEL SHEETS: ASTM A 366/A 366M, COLD-ROLLED SHEETS; COMMERCIAL QUALITY; WITH OILED, MATTE FINISH FOR EXPOSED DUCTS.
D. STAINLESS STEEL: ASTM A 480/A 480M, TYPE 316 OR 304 AS INDICATED, AND HAVING A NO. 2D FINISH FOR CONCEALED DUCTS AND A NO. 2B FINISH FOR EXPOSED DUCTS.
E. ALUMINUM SHEETS: ASTM B 209, ALLOY 3003, TEMPER H14; WITH MILL FINISH FOR CONCEALED DUCTS AND EXPOSED DUCTS.

2.3 SEALANT MATERIALS
A. JOINT AND SEAM SEALANTS, GENERAL: THE TERM "SEALANT" IS NOT LIMITED TO MATERIALS OF ADHESIVE OR MASTIC NATURE BUT INCLUDES TAPES AND COMBINATIONS OF OPEN-WEAVE FABRIC STRIPS AND MASTICS.
B. TAPE SEALING SYSTEM: WOVEN-FIBER TAPE IMPREGNATED WITH GYPSUM MINERAL COMPOUND AND MODIFIED ACRYLIC/SILICONE ACTIVATOR TO REACT EXOTHERMICALLY WITH TAPE TO FORM HARD, DURABLE, AIRTIGHT SEAL.
C. WATER-BASED JOINT AND SEAM SEALANT: FLEXIBLE, ADHESIVE SEALANT, RESISTANT TO UV LIGHT WHEN CURED, UL 723 LISTED, AND COMPLYING WITH NFPA REQUIREMENTS FOR CLASS 1 DUCTS.
D. SOLVENT-BASED JOINT AND SEAM SEALANT: ONE-PART, NON-SAG, SOLVENT-RELEASE-CURING, POLYMERIZED BUTYL SEALANT FORMULATED WITH A MINIMUM OF 75 PERCENT SOLIDS.
E. FLANGED JOINT MASTIC: ONE-PARTD. SOLVENT-BASED JOINT AND SEAM SEALANT: ONE-PART, NON-SAG, SOLVENT-RELEASE-CURING, POLYMERIZED BUTYL SEALANT FORMULATED WITH A MINIMUM OF 75 PERCENT SOLIDS.
F. FLANGE GASKETS: BUTYL RUBBER OR EPDM POLYMER WITH POLYISOBUTYLENE PLASTICIZER.

2.4 HANGERS AND SUPPORTS
A. BUILDING ATTACHMENTS: CONCRETE INSERTS OR STRUCTURAL-STEEL FASTENERS APPROPRIATE FOR CONSTRUCTION MATERIALS TO WHICH HANGERS ARE BEING ATTACHED.
B. HANGER MATERIALS: MATERIALS SHALL BE COMPATIBLE WITH DUCT MATERIALS. GALVANIZED SHEET STEEL OR THREADED STEEL ROD FOR GALVANIZED-STEEL DUCTS.
1. HANGERS/SUPPORTS INSTALLED OUTDOORS: ELECTRO-GALVANIZED, ALL-THREAD RODS OR GALVANIZED RODS WITH THREADS PAINTED WITH ZINC-CHROMATE PRIMER AFTER INSTALLATION.
2. STRAP AND ROD SIZES: COMPLY WITH SMACNA'S "HVAC DUCT CONSTRUCTION STANDARDS--METAL AND FLEXIBLE" FOR STEEL SHEET WIDTH AND THICKNESS AND FOR STEEL ROD DIAMETERS.
C. DUCT ATTACHMENTS: SHEET METAL SCREWS OR SELF-TAPPING METAL SCREWS; COMPATIBLE WITH DUCT MATERIALS.
D. TRAPEZE AND RISER SUPPORTS: STEEL SHAPES COMPLYING WITH ASTM A 36/A 36M.
1. SUPPORTS FOR GALVANIZED-STEEL DUCTS: GALVANIZED-STEEL SHAPES AND PLATES.
2. SUPPORTS FOR STAINLESS-STEEL DUCTS: STAINLESS-STEEL SUPPORT MATERIALS.
3. SUPPORTS FOR ALUMINUM DUCTS: ALUMINUM SUPPORT MATERIALS.

2.6 ROUND AND FLAT-OVAL DUCT AND FITTING FABRICATION
A. DIAMETER AS APPLIED TO FLAT-OVAL DUCTS IN THIS ARTICLE IS THE DIAMETER OF A ROUND DUCT WITH A CIRCUMFERENCE EQUAL TO THE PERIMETER OF A GIVEN SIZE OF FLAT-OVAL DUCT.
B. ROUND, SPIRAL LOCK-SEAM DUCTS AND FITTINGS: FABRICATE DUCTS AND FITTINGS OF INDICATED MATERIAL ACCORDING TO SMACNA'S "HVAC DUCT CONSTRUCTION STANDARDS--METAL AND FLEXIBLE." USE OF ADDITIONAL RIBS OR CORRUGATIONS TO ALLOW USAGE OF A LIGHTER GAUGE SHALL NOT BE ACCEPTABLE.
C. FLAT-OVAL, SPIRAL LOCK-SEAM DUCTS AND FITTINGS: FABRICATE DUCTS AND FITTINGS OF INDICATED MATERIAL ACCORDING TO SMACNA'S "HVAC DUCT CONSTRUCTION STANDARDS--METAL AND FLEXIBLE." FABRICATE DUCTS LARGER THAN 72 INCHES IN DIAMETER WITH BUTT-WELDED LONGITUDINAL SEAMS. USE OF ADDITIONAL RIBS OR CORRUGATIONS TO ALLOW USAGE OF A LIGHTER GAUGE SHALL NOT BE ACCEPTABLE.
D. DUCT JOINTS:
1. DUCTS UP TO 20 INCHES IN DIAMETER: INTERIOR, CENTER-BEADED SLIP COUPLING, SEALED BEFORE AND AFTER FASTENING, ATTACHED WITH SHEET METAL SCREWS.
2. DUCTS 21 TO 72 INCHES IN DIAMETER: THREE-PIECE, GASKETED, FLANGED JOINT CONSISTING OF TWO INTERNAL FLANGES WITH SEALANT AND ONE EXTERNAL CLOSURE BAND WITH GASKET.
3. DUCTS LARGER THAN 72 INCHES IN DIAMETER: COMPANION ANGLE FLANGED JOINTS PER SMACNA "HVAC DUCT CONSTRUCTION STANDARDS--METAL AND FLEXIBLE," FIGURE 3-2.
4. ROUND DUCTS: PREFABRICATED CONNECTION SYSTEM CONSISTING OF DOUBLE-LIPPED, EPDM RUBBER GASKET. MANUFACTURE DUCTS ACCORDING TO CONNECTION SYSTEM MANUFACTURER'S TOLERANCES.
5. FLAT-OVAL DUCTS: PREFABRICATED CONNECTION SYSTEM CONSISTING OF TWO FLANGES AND ONE SYNTHETIC RUBBER GASKET.
E. FABRICATE ELBOWS USING DIE-FORMED, GORED, PLEATED, OR MITERED CONSTRUCTION. END RADIUS OF DIE-FORMED, GORED, AND PLEATED ELBOWS SHALL BE 1-1/2 TIMES DUCT DIAMETER. UNLESS ELBOW CONSTRUCTION TYPE IS INDICATED, FABRICATE ELBOWS AS FOLLOWS:
1. MITERED-ELBOW RADIUS AND NUMBER OF PIECES: WELDED CONSTRUCTION COMPLYING WITH SMACNA'S "HVAC DUCT CONSTRUCTION STANDARDS--METAL AND FLEXIBLE," UNLESS OTHERWISE INDICATED.
F. LOW PRESSURE ROUND DUCTS SHALL BE FACTORY FABRICATED SPIRAL DUCTS AND FITTINGS OR GROOVED LONGITUDINAL SEAM DUCTS. GROOVED LONGITUDINAL SEAM DUCTS SHALL HAVE SEAMS SEALED WITH MASTIC WHEN FABRICATED AND SECTIONS JOINED WITH BELL AND SPIGOT FITTINGS OR COUPLINGS. FITTINGS AND COUPLINGS SHALL BE SEALED WITH MASTIC TO MAKE AN AIR TIGHT JOINT. FITTINGS FOR SHOP FABRICATED DUCTS MAY BE FORMED OR OF MITERED CONSTRUCTION WITH NOT LESS THAN 3-PIECE 45 DEGREE ELBOWS AND 5-PIECE 90 DEGREE ELBOWS.

PART 3: EXECUTION

3.1 DUCT APPLICATIONS
A. STATIC-PRESSURE CLASSES: UNLESS OTHERWISE INDICATED, SELECT DUCT TYPE, JOINT CONNECTIONS, MATERIALS, AND STATIC-PRESSURE CLASSES ACCORDING TO THE DUCT CONSTRUCTION SCHEDULE ON THE DRAWINGS.
B. ALL DUCTS SHALL BE GALVANIZED STEEL UNLESS OTHERWISE NOTED.

3.2 DUCT INSTALLATION
A. CONSTRUCT AND INSTALL DUCTS ACCORDING TO SMACNA'S "HVAC DUCT CONSTRUCTION STANDARDS--METAL AND FLEXIBLE," UNLESS OTHERWISE INDICATED. INSTALL DUCTS WITH FEWEST POSSIBLE JOINTS. INSTALL FABRICATED FITTINGS FOR CHANGES IN DIRECTIONS, SIZE, AND SHAPE AND FOR CONNECTIONS.
B. INSTALL DUCTS, UNLESS OTHERWISE INDICATED, VERTICALLY AND HORIZONTALLY AND PARALLEL AND PERPENDICULAR TO BUILDING LINES; AVOID DIAGONAL RUNS.
C. INSTALL DUCTS CLOSE TO WALLS, OVERHEAD CONSTRUCTION, COLUMNS, AND OTHER STRUCTURAL AND PERMANENT ENCLOSURE ELEMENTS OF BUILDING.
D. INSTALL DUCTS WITH A CLEARANCE OF 1 INCH, PLUS ALLOWANCE FOR INSULATION THICKNESS.
E. CONCEAL DUCTS FROM VIEW IN FINISHED SPACES. DO NOT ENCASE HORIZONTAL RUNS IN SOLID PARTITIONS UNLESS SPECIFICALLY INDICATED.
F. COORDINATE LAYOUT WITH SUSPENDED CEILING, FIRE-AND SMOKE-CONTROL DAMPERS, LIGHTING LAYOUTS, AND SIMILAR FINISHED WORK. ROUTE DUCTWORK AT UNDERSIDE OF STRUCTURAL STEEL BEAMS OR BETWEEN STRUCTURAL STEEL BEAMS UNLESS OTHERWISE INDICATED.
G. SEAL ALL JOINTS AND SEAMS. APPLY SEALANT TO MALE END CONNECTORS BEFORE INSERTION, AND AFTERWARD TO COVER ENTIRE JOINT AND SHEET METAL SCREWS.
H. ELECTRICAL EQUIPMENT SPACES: ROUTE DUCTS TO AVOID PASSING THROUGH ELECTRICAL EQUIPMENT SPACES AND ENCLOSURES.
I. NON-FIRE-RATED PARTITION PENETRATIONS: WHERE DUCTS PASS THROUGH INTERIOR PARTITIONS AND EXTERIOR WALLS AND ARE EXPOSED TO VIEW OR CONCEALED, CONCEAL SPACES BETWEEN CONSTRUCTION OPENINGS AND DUCTS OR DUCT INSULATION WITH SHEET METAL FLANGES OF SAME METAL THICKNESS AS DUCTS. OVERLAP OPENINGS ON 4 SIDES BY AT LEAST 1-1/2 INCHES.
J. FIRE-RATED PENETRATIONS: WHERE DUCTS PASS THROUGH RATED WALLS, PARTITIONS, FLOORS OR ROOFS, INSTALL APPROPRIATELY RATED FIRE DAMPERS, SLEEVES, AND FIRESTOPPING SEALANT. FIRE AND SMOKE DAMPERS ARE SPECIFIED IN DIVISION 23 SECTION "DUCT ACCESSORIES."
K. INSTALL DUCTS WITH HANGERS AND BRACES DESIGNED TO WITHSTAND, WITHOUT DAMAGE TO EQUIPMENT, SEISMIC FORCE REQUIRED BY APPLICABLE BUILDING CODES. REFER TO SMACNA'S "SEISMIC RESTRAINT MANUAL: GUIDELINES FOR MECHANICAL SYSTEMS."

23.3 SEAM AND JOINT SEALING
A. SEAL DUCT SEAMS AND JOINTS ACCORDING TO SMACNA'S "HVAC DUCT CONSTRUCTION STANDARDS--METAL AND FLEXIBLE" FOR DUCT PRESSURE CLASS INDICATED.
1. MEDIUM PRESSURE DUCTWORK ABOVE 2" PRESSURE CLASS: SEAL TO CLASS "A" STANDARDS AS OUTLINED IN SMACNA'S "HVAC DUCT CONSTRUCTION STANDARDS--METAL AND FLEXIBLE".
a. RECTANGULAR DUCTWORK: SEAL ALL JOINTS AND CONNECTIONS WITH HARD CAST II.
b. ROUND AND FLAT OVAL DUCTWORK: SEAL JOINTS, SEAMS AND CONNECTIONS WITH NON-MIGRATING MASTIC OR LIQUID ELASTIC SEALANT AS RECOMMENDED BY THE MANUFACTURER.
2. LOW PRESSURE DUCTWORK 2-INCH AND LOWER PRESSURE CLASS: SEAL TO CLASS "B" STANDARDS AS OUTLINED IN SMACNA'S "HVAC DUCT CONSTRUCTION STANDARDS--METAL AND FLEXIBLE".
B. SEAL JOINTS, SEAMS AND CONNECTIONS WITH LIQUID ELASTIC SEALANT AS RECOMMENDED BY THE MANUFACTURER.
C. SEAL DUCTS BEFORE EXTERNAL INSULATION IS APPLIED.

3.4 HANGING AND SUPPORTING
A. DUCTWORK SHALL BE SUPPORTED FROM BUILDING STRUCTURAL STEEL, SUPPLEMENTARY STEEL ANGELES/SUPPORTS, OR CONCRETE FLOOR/ROOF SLABS. DUCTWORK HANGERS/SUPPORTS SHALL NOT BE ATTACHED SOLELY TO METAL DECKING. PROVIDE SUPPLEMENTARY ANGLES/SUPPORTS AS REQUIRED AND PRIOR TO STRUCTURAL STEEL FIREPROOFING.
B. SUPPORT HORIZONTAL DUCTS WITHIN 24 INCHES OF EACH ELBOW AND WITHIN 48 INCHES OF EACH BRANCH INTERSECTION.
C. SUPPORT VERTICAL DUCTS AT MAXIMUM INTERVALS OF 16 FEET AND AT EACH FLOOR.
D. INSTALL UPPER ATTACHMENTS TO STRUCTURES WITH AN ALLOWABLE LOAD NOT EXCEEDING ONE-FOURTH OF FAILURE (PROOF-TEST) LOAD.
E. INSTALL CONCRETE INSERTS BEFORE PLACING CONCRETE.

3.5 CONNECTIONS
A. MAKE CONNECTIONS TO EQUIPMENT WITH FLEXIBLE CONNECTORS ACCORDING TO DIVISION 23 SECTION "DUCT ACCESSORIES."
B. COMPLY WITH SMACNA'S "HVAC DUCT CONSTRUCTION STANDARDS--METAL AND FLEXIBLE" FOR BRANCH, OUTLET AND INLET, AND TERMINAL UNIT CONNECTIONS.

3.6 DUCT SYSTEM PROTECTION
A. PROTECT DUCT INTERIORS FROM THE ELEMENTS UNTIL BUILDING IS ENCLOSED AND FOREIGN MATERIALS THROUGHOUT THE PROJECT DURATION. FOLLOW SMACNA'S "DUCT CLEANLINESS FOR NEW CONSTRUCTION."
B. PROVIDE FILTERS IN HVAC UNITS AND AT DUCT INLETS TO PROTECT DUCT SYSTEMS FROM DUST IF UNITS ARE PLACED IN OPERATION WHILE CONSTRUCTION IS STILL IN PROGRESS. FILTERS SHALL BE CHANGED REGULARLY TO PREVENT DUST ENTRY INTO DUCTWORK, BUT NO LESS THAN EVERY WEEK.
C. DUCT SYSTEMS THAT HAVE NOT BEEN PROPERLY PROTECTED, AS DETERMINED BY THE ENGINEER, SHALL BE REQUIRED TO BE MECHANICALLY CLEANED USING MECHANICAL AGITATION AND VACUUM-COLLECTION DEVICES.

SECTION 233300 - AIR DUCT ACCESSORIES
PART 1: GENERAL

1.1 SUMMARY
A. THIS SECTION INCLUDES THE FOLLOWING: VOLUME DAMPERS, MOTORIZED CONTROL DAMPERS, FIRE DAMPERS, TURNING VANES, DUCT-MOUNTING ACCESS DOORS, FLEXIBLE CONNECTORS, FLEXIBLE DUCTS, AND DUCT ACCESSORY HARDWARE.

1.2 QUALITY ASSURANCE
A. COMPLY WITH NFPA 90A, "INSTALLATION OF AIR CONDITIONING AND VENTILATING SYSTEMS," AND NFPA 90B, "INSTALLATION OF WARM AIR HEATING AND AIR CONDITIONING SYSTEMS."

PART 2: PRODUCTS

2.1 MANUFACTURERS
A. MANUFACTURERS - VOLUME DAMPERS, MOTORIZED CONTROL DAMPERS, FIRE DAMPERS, SMOKE DAMPERS:
1. CESCO PRODUCTS.
2. GREENHECK.
3. NAILOR INDUSTRIES.
4. NATIONAL CONTROLLED AIR.
5. POTTORFF.
6. PREFCO PRODUCTS, INC.
7. RUSKIN COMPANY.
B. MANUFACTURERS - TURNING VANES:
1. DUCTMATE INDUSTRIES, INC.
2. DURO DYNE CORP.
3. METALAIRE, INC.
4. WARD INDUSTRIES, INC.
C. MANUFACTURERS - DUCT MOUNTED ACCESS DOORS
1. AIR BALANCE (FSA 100 BASIS OF DESIGN).
2. CESCO PRODUCTS.
3. FLEXMASTER U.S.A., INC.
4. GREENHECK.
5. NAILOR INDUSTRIES INC.
6. POTTORFF.
7. VENTFABRICS, INC.
D. MANUFACTURERS - FLEXIBLE CONNECTORS
1. DUCTMATE INDUSTRIES, INC.
2. DURO DYNE CORP.
3. VENTFABRICS, INC.
4. WARD INDUSTRIES, INC.
E. MANUFACTURERS - FLEXIBLE DUCTS
1. FLEXMASTER U.S.A., INC.
2. HART & COOLEY, INC.
3. THERMAFLEX.
4. WIREMOLD.

2.2 SHEET METAL MATERIALS
A. COMPLY WITH SMACNA'S "HVAC DUCT CONSTRUCTION STANDARDS--METAL AND FLEXIBLE" FOR ACCEPTABLE MATERIALS, MATERIAL THICKNESSES, AND DUCT CONSTRUCTION METHODS, UNLESS OTHERWISE INDICATED.
B. GALVANIZED SHEET STEEL: LOCK-FORMING QUALITY; COMPLYING WITH ASTM A 653/A 653M AND HAVING G60 COATING DESIGNATION; DUCTS SHALL HAVE MILL-PHOSPHATIZED FINISH FOR SURFACES EXPOSED TO VIEW.
C. STAINLESS STEEL: ASTM A 480/A 480M.
D. ALUMINUM SHEETS: ASTM B 209, ALLOY 3003, TEMPER H14; WITH MILL FINISH FOR CONCEALED DUCTS AND STANDARD, 1-SIDE BRIGHT FINISH FOR EXPOSED DUCTS.
E. EXTRUDED ALUMINUM: ASTM B 221, ALLOY 6063, TEMPER T6.
F. REINFORCEMENT SHAPES AND PLATES: GALVANIZED-STEEL REINFORCEMENT WHERE INSTALLED ON GALVANIZED SHEET METAL DUCTS; COMPATIBLE MATERIALS FOR ALUMINUM AND STAINLESS-STEEL DUCTS.
G. TIE RODS: GALVANIZED STEEL, 1/4-INCH MINIMUM DIAMETER FOR LENGTHS 36 INCHES OR LESS; 3/8-INCH MINIMUM DIAMETER FOR LENGTHS LONGER THAN 36 INCHES.

2.3 VOLUME DAMPERS
A. GENERAL DESCRIPTION: FACTORY FABRICATED, WITH REQUIRED HARDWARE AND ACCESSORIES. STIFFEN DAMPER BLADES FOR STABILITY. INCLUDE LOCKING DEVICE TO HOLD SINGLE-BLADE DAMPERS IN A FIXED POSITION WITHOUT VIBRATION. CLOSE DUCT PENETRATIONS FOR DAMPER COMPONENTS TO SEAL DUCT CONSISTENT WITH PRESSURE CLASS.
1. PRESSURE CLASS

2.6 DUCT-MOUNTING ACCESS DOOR
A. GENERAL DESCRIPTION: FABRICATE DOORS AIRTIGHT AND SUITABLE FOR DUCT PRESSURE CLASS.
B. DOOR: DOUBLE WALL, DUCT MOUNTING, AND RECTANGULAR; FABRICATED OF GALVANIZED SHEET METAL WITH INSULATION FILL AND THICKNESS AS INDICATED FOR DUCT PRESSURE CLASS (MINIMUM 1-INCH). INCLUDE VISION PANEL WHERE INDICATED. INCLUDE 1-BY-1-INCH BUTT OR PIANO HINGE AND CAM LATCHES.
1. FRAME: GALVANIZED SHEET STEEL, WITH BEND-OVER TABS AND FOAM GASKETS.
2. PROVIDE NUMBER OF HINGES AND LOCKS AS FOLLOWS:
a. LESS THAN 12 INCHES SQUARE: SECURE WITH TWO SASH LOCKS.
b. UP TO 18 INCHES SQUARE: TWO HINGES AND TWO SASH LOCKS.
c. UP TO 24 BY 48 INCHES: THREE HINGES AND TWO COMPRESSION LATCHES WITH OUTSIDE AND INSIDE HANDLES.
d. SIZES 24 BY 48 INCHES AND LARGER: ONE ADDITIONAL HINGE.
C. DOOR: DOUBLE WALL, DUCT MOUNTING, AND ROUND; FABRICATED OF GALVANIZED SHEET METAL WITH INSULATION FILL AND 1-INCH THICKNESS. INCLUDE CAM LATCHES.
1. FRAME: GALVANIZED SHEET STEEL, WITH SPIN-IN NOTCHED FRAME.
D. SEAL AROUND FRAME ATTACHMENT TO DUCT AND DOOR TO FRAME WITH NEOPRENE OR FOAM RUBBER.
E. INSULATION: 1-INCH- THICK, FIBROUS-GLASS OR POLYSTYRENE-FOAM BOARD.

2.7 FLEXIBLE CONNECTORS
A. GENERAL DESCRIPTION: FLAME-RETARDANT OR NONCOMBUSTIBLE FABRICS, COATINGS, AND ADHESIVES COMPLYING WITH UL 181, CLASS 1.
B. METAL-EDGED CONNECTORS: FACTORY FABRICATED WITH A FABRIC STRIP ALUMINUM SHEETS. SELECT METAL COMPATIBLE WITH DUCTS. CONNECTOR FABRIC IN PARAGRAPH BELOW IS NOT SUITABLE FOR EXPOSURE TO SUN, WEATHER, OR CORROSIVE ENVIRONMENTS. IT IS SUITABLE FOR SYSTEM TEMPERATURES FROM MINUS 10 TO PLUS 200 DEG F (MINUS 23 TO PLUS 93 DEG C).
C. INDOOR SYSTEM, FLEXIBLE CONNECTOR FABRIC: GLASS FABRIC DOUBLE COATED WITH NEOPRENE.
1. MINIMUM WEIGHT: 29 OZ./SQ. YD.
2. SERVICE TEMPERATURE: MINUS 20 TO PLUS 200 DEG F.
D. OUTDOOR SYSTEM, FLEXIBLE CONNECTOR FABRIC: GLASS FABRIC DOUBLE COATED WITH WEATHERPROOF, SYNTHETIC RUBBER RESISTANT TO UV RAYS AND OZONE.
1. MINIMUM WEIGHT: 24 OZ./SQ. YD.
2. TENSILE STRENGTH: 530 LBF/INCH IN THE WARP AND 440 LBF/INCH IN THE FILLING.
3. SERVICE TEMPERATURE: MINUS 10 TO PLUS 250 DEG F.

2.8 FLEXIBLE DUCTS
A. MANUFACTURERS: SUBJECT TO COMPLIANCE WITH REQUIREMENTS, PROVIDE PRODUCTS BY ONE OF THE FOLLOWING:
1. ATCO RUBBER PRODUCTS, INC.
2. FLEXMASTER U.S.A., INC.
3. MCGILL AIRFLOW LLC.
4. WARD INDUSTRIES, INC.; A DIVISION OF HART & COOLEY, INC.
5. WIREMOLD.
6. THERMAFLEX.
B. INSULATED, FLEXIBLE DUCT: UL 181, CLASS 1, ACOUSTICALLY TRANSPARENT NYLON SUPPORTED BY HELICALLY WOUND, CORROSIVE RESISTANT GALVANIZED STEEL WIRE ATTACHED TO DUCT FABRIC WITHOUT ADHESIVES; 1" THICK, FIBROUS-GLASS INSULATION; FIRE RETARDANT, REINFORCED ALUMINUM VAPOR BARRIER.
1. PRESSURE RATING: 6-INCH WG POSITIVE AND 1.0-INCH WG NEGATIVE.
2. MAXIMUM AIR VELOCITY: 4000 FPM.
3. TEMPERATURE RANGE: MINUS 20 TO PLUS 250 DEG F.
4. INSULATION R-VALUE: COMPLY WITH ASHRAE/IESNA 90.1-2010.
5. CERTIFICATIONS: UL 181, CLASS 1 AIR DUCT, NFPA 90A, NFPA 90B,
6. ACOUSTICAL TESTING IN ACCORDANCE WITH ASTM E477 AND ADC TEST CODE FD 72-RI BY ETL.
7. REFERENCE SCHEDULE BELOW FOR INSERTION LOSSES WITH A 90-DEGREE TURN:

DIA (in.)	LENGTH (ft.)	INSERTION LOSS, Db OCTAVE BAND CENTER FREQUENCY, Hz						
		63	125	250	500	1K	2K	4K
6	12	21	46	47	52	26	55	55
	9	14	29	30	32	35	34	35
	6	9	15	16	17	18	17	18
	3	3.8	5.4	5.5	5.7	5.9	5.8	5.9
8	12	25	44	50	55	50	56	57
	9	17	28	32	34	32	35	36
	6	10	15	16	17	16	18	18
	3	2.4	5.3	5.6	5.8	5.6	5.9	6.0
12	12	29	40	43	47	46	49	43
	9	19	26	28	30	29	31	28
	6	11	14	15	16	15	16	15
	3	4.4	5.1	5.3	5.5	5.4	5.6	5.3

C. FLEXIBLE DUCT CONNECTORS:
1. CLAMPS: STAINLESS-STEEL BAND WITH CADMIUM-PLATED HEX SCREW TO TIGHTEN BAND WITH A WORM-GEAR ACTION IN SIZES 3 THROUGH 18 INCHES, TO SUIT DUCT SIZE.

2.9 DUCT ACCESSORY HARDWARE
A. INSTRUMENT TEST HOLES: CAST IRON OR CAST ALUMINUM TO SUIT DUCT MATERIAL, INCLUDING SCREW CAP AND GASKET. SIZE TO ALLOW INSERTION OF PITOT TUBE AND OTHER TESTING INSTRUMENTS AND OF LENGTH TO SUIT DUCT INSULATION THICKNESS.
B. ADHESIVES: HIGH STRENGTH, QUICK SETTING, NEOPRENE BASED, WATERPROOF, AND RESISTANT TO GASOLINE AND GREASE.

PART 3: EXECUTION

3.1 APPLICATION AND INSTALLATION
A. INSTALL DUCT ACCESSORIES ACCORDING TO APPLICABLE DETAILS IN SMACNA'S "HVAC DUCT CONSTRUCTION STANDARDS--METAL AND FLEXIBLE" FOR METAL DUCTS.
B. PROVIDE DUCT ACCESSORIES OF MATERIALS SUITED TO DUCT MATERIALS; USE GALVANIZED-STEEL ACCESSORIES IN GALVANIZED-STEEL DUCTS, STAINLESS-STEEL ACCESSORIES IN STAINLESS-STEEL DUCTS, AND ALUMINUM ACCESSORIES IN ALUMINUM DUCTS.
C. PROVIDE BALANCING DAMPERS AT POINTS ON SUPPLY, RETURN, AND EXHAUST SYSTEMS WHERE BRANCHES LEAD FROM LARGER DUCTS AS REQUIRED FOR AIR BALANCING. INSTALL AT A MINIMUM OF TWO DUCT WIDTHS FROM BRANCH TAKEOFF.
D. PROVIDE TEST HOLES AT FAN INLETS AND OUTLETS AND ELSEWHERE AS INDICATED.
E. INSTALL FIRE AND SMOKE DAMPERS, WITH FUSIBLE LINKS, ACCORDING TO MANUFACTURER'S UL-APPROVED WRITTEN INSTRUCTIONS. PROVIDE FIRE DAMPERS AS FOLLOWS:
1. FLOOR AND ROOF PENETRATIONS: MULTIPLE BLADE TYPE.
2. WALL PENETRATIONS: CURTAIN TYPE OR MULTIPLE BLADE TYPE.
F. INSTALL DUCT ACCESS DOORS TO ALLOW FOR INSPECTING, ADJUSTING, AND MAINTAINING ACCESSORIES AND TERMINAL UNITS AS FOLLOWS:
1. ON BOTH SIDES OF DUCT COILS.
2. DOWNSTREAM FROM EQUIPMENT.
3. ADJACENT TO FIRE AND SMOKE DAMPERS, PROVIDING ACCESS TO RESET OR REINSTALL FUSIBLE LINKS.
4. ON SIDES OF DUCTS WHERE ADEQUATE CLEARANCE IS AVAILABLE.
G. INSTALL THE FOLLOWING SIZES FOR DUCT-MOUNTING, RECTANGULAR ACCESS DOORS:
1. ONE-HAND OR INSPECTION ACCESS: 8 BY 5 INCHES.
2. TWO-HAND ACCESS: 12 BY 6 INCHES.
3. HEAD AND HAND ACCESS: 18 BY 10 INCHES.
4. HEAD AND SHOULDERS ACCESS: 21 BY 14 INCHES.
5. BODY ACCESS: 25 BY 14 INCHES.
6. BODY PLUS LADDER ACCESS: 25 BY 17 INCHES.
H. INSTALL THE FOLLOWING SIZES FOR DUCT-MOUNTING, ROUND ACCESS DOORS:
1. ONE-HAND OR INSPECTION ACCESS: 8 INCHES IN DIAMETER.
2. TWO-HAND ACCESS: 10 INCHES IN DIAMETER.
3. HEAD AND HAND ACCESS: 12 INCHES IN DIAMETER.
4. HEAD AND SHOULDERS ACCESS: 18 INCHES IN DIAMETER.
5. BODY ACCESS: 24 INCHES IN DIAMETER
I. LABEL ACCESS DOORS ACCORDING TO DIVISION 23 SECTION "MECHANICAL IDENTIFICATION."
J. INSTALL FLEXIBLE CONNECTORS IMMEDIATELY ADJACENT TO EQUIPMENT IN DUCTS ASSOCIATED WITH FANS AND MOTORIZED EQUIPMENT SUPPORTED BY VIBRATION ISOLATORS. FOR FANS DEVELOPING STATIC PRESSURES OF 5-INCH WG AND HIGHER, COVER FLEXIBLE CONNECTORS WITH LOADED VINYL SHEET HELD IN PLACE WITH METAL STRAPS.
K. CONNECT TERMINAL UNITS TO SUPPLY DUCTS DIRECTLY.
L. CONNECT DIFFUSERS OR GRILLES TO LOW PRESSURE DUCTS DIRECTLY. MAXIMUM 60-INCH LENGTHS OF STRAIGHT FLEXIBLE DUCT CAN BE USED FOR STRAIGHT RUNS. DO NOT USE FLEXIBLE DUCTS TO CHANGE DIRECTIONS. CONNECT FLEXIBLE DUCTS TO METAL DUCTS WITH DRAW BANDS. PROVIDE HARD ELBOW AT DIFFUSERS.

3.2 ADJUSTING
A. ADJUST DUCT ACCESSORIES FOR PROPER SETTINGS.
B. ADJUST FIRE AND SMOKE DAMPERS FOR PROPER ACTION.
C. FINAL POSITIONING OF MANUAL-VOLUME DAMPERS IS SPECIFIED IN DIVISION 23 SECTION "TESTING, ADJUSTING, AND BALANCING."

HVAC EQUIPMENT SPECIFICATION
ATTIC MOUNTED SPLIT-SYSTEM AIR HANDLING UNIT (OAU-1)
GENERAL
PROVIDE CONVERTIBLE AIR HANDLING UNITS WITH DIRECT EXPANSION COOLING COIL AND ELECTRIC HEATING COIL AS STATED IN EQUIPMENT SCHEDULE.

REFERENCE
ARI 260 - STANDARD FOR SOUND RATING OF DUCTED AIR MOVING AND CONDITIONING EQUIPMENT.

DELIVERY, STORAGE, AND HANDLING
STORE IN A CLEAN DRY PLACE AND PROTECT FROM WEATHER AND CONSTRUCTION TRAFFIC. HANDLE CAREFULLY TO AVOID DAMAGE TO COMPONENTS, ENCLOSURES, AND FINISH.

ENVIRONMENTAL REQUIREMENTS
DO NOT OPERATE UNITS FOR ANY PURPOSE, TEMPORARY OR PERMANENT, UNTIL OAU IS CLEAN, FILTERS ARE IN PLACE, AND FAN HAS BEEN TEST RUN UNDER OBSERVATION.

PRODUCTS
ACCEPTABLE MANUFACTURERS
AAON OR APPROVED EQUAL BASED ON SUBMITALS TO OWNER/ENGINEER.

UNIT ARRANGEMENT SHALL BE HORIZONTAL DRAW THROUGH TYPE AIR HANDLING UNITS. UNITS SHALL CONSIST OF FILTER SECTION, ACCESS SECTION, DIRECT EXPANSION COOLING COIL, FAN SECTION, AND ELECTRIC HEATER.

CASING
UNIT SHALL HAVE DOUBLE WALL INSULATED PANEL CONSTRUCTION WITH HINGED ACCESS DOORS

FANS
PROVIDE SUPPLY FAN DESIGNED AND SUITABLE FOR CLASS OF SERVICE INDICATED IN THE UNIT SCHEDULE.
FAN SECTIONS SHALL HAVE FULL HEIGHT, ACCESS DOORS FOR INSPECTION AND MAINTENANCE OF INTERNAL COMPONENTS.

COILS
COILS SHALL BE MANUFACTURED BY THE SAME COMPANY AS THE SUPPLIER OF THE AIR HANDLING UNIT. INSTALL COILS SUCH THAT HEADERS AND RETURN BENDS ARE ENCLOSED BY UNIT CASINGS.
CONSTRUCT COIL CASINGS OF GALVANIZED STEEL WITH FORMED END SUPPORTS AND TOP AND BOTTOM CHANNELS. INSTALL DRAIN CHANNELS TO DRAIN CONDENSATE TO MAIN DRAIN PANS WITHOUT FLOODING LOWER COILS OR PASSING CONDENSATE THROUGH AIRSTREAM.

DRAIN PAN CONSTRUCTION
THE DRAIN PAN SHALL BE CONSTRUCTED OF GALVANIZED STEEL AND INSULATED TO PREVENT SWEATING. THE BOTTOM OF THE DRAIN PAN SHALL BE SLOPED IN TWO PLANES THAT PITCH THE CONDENSATE TO THE DRAIN CONNECTION. THE DRAIN PAN, WHEN THE UNIT IS INSTALLED AND TRAPPED PER THE MANUFACTURER'S INSTALLATION MANUAL SHALL BE DESIGNED TO FILL THE DRAIN OUTLET NO MORE THAN HALF OF THE OPENING.

FILTERS
PROVIDE FACTORY FABRICATED FILTER SECTION OF THE SAME CONSTRUCTION AND FINISH AS UNIT CASINGS. FILTER SECTION SHALL HAVE REMOVABLE ACCESS DOOR FOR FILTER REMOVAL.
PROVIDE STANDARD EFFICIENCY REPLACEABLE FILTERS.

ACCESS SECTIONS
ACCESS FOR INSPECTION AND CLEANING OF THE UNIT DRAIN PAN, COILS AND FAN SHALL BE PROVIDED. THE UNIT SHALL BE INSTALLED FOR PROPER ACCESS. ACCESS SECTION SHALL HAVE DOUBLE WALL INSULATED ACCESS DOOR ON ONE SIDE.

FACTORY INSTALLED STARTERS
PROVIDE IEC OR NEMA TYPE STARTER FOR EACH FAN MOTOR. DISCONECT SWITCH BY ELECTRICAL CONTRACTOR. EACH STARTER SHALL BE PROPERLY SIZED, MOUNTED, WIRED AND COMMISSIONED BY THE AHU MANUFACTURER.

CONTROLS
PROVIDE PROGAMABLE THERMOSTAT WITH A LOCKBOX FOR EACH AHU. LOW VOLTAGE WIRING BY MECHANICAL CONTRACTOR.

CONTROLS
FACTORY INSTALLED MICROPROCESSOR CONTROLS.
THE PROGRAMMABLE MICROPROCESSOR CONTROLLER AND A MAJORITY OF THE CONTROL COMPONENTS SHALL BE SELECTED MOUNTED, WIRED AND TESTED BY THE OAU MANUFACTURER. UNIT MOUNTED CONTROLS SHALL BE COVERED BY THE OAU MANUFACTURER'S STANDARD WARRANTY OF ONE YEAR FROM OAU STARTUP OR 18 MONTHS FROM SHIPMENT, WHICHEVER COMES FIRST. FACTORY MOUNTING WILL FACILITATE TEMPORARY HEATING, COOLING, VENTILATION, AND OR TIMELY COMPLETION OF THE PROJECT. PROVIDE SUPPLY TEMPERATURE SENSOR.

PROVIDE MANUAL RESET LOW LIMIT SWITCHES (FREEZESTAT), WHICH WILL SHUT DOWN THE FAN TO PROTECT THE UNIT. THE LOW LIMIT SWITCHES SHALL BE FACTORY MOUNTED TO MAXIMIZE COIL COVERAGE. FIELD INSTALLATION WILL BE ACCEPTABLE IF THE PROPER CAPILLARY CLIPS ARE USED AND ALL FOUR CORNERS OF THE COIL AND THE COIL FACE ARE UNIFORMLY PROTECTED. UNITS WITH GREATER THAN 21 SQUARE FEET OF COIL SHALL HAVE AT LEAST TWO LOW LIMITS. AVERAGING SENSORS MUST BE INSTALLED WITH THE SAME QUALITY PROCEDURES ACROSS THE COIL FACE.

UTILITY CONNECTIONS
PROVIDE SIDE POWER CONNECTIONSFOR THE RTU.

INDOOR AIR HANDLING UNITS (AHC-1 & AHC-2)
GENERAL
PROVIDE WALL MOUNTED DUCTLESS AIR HANDLING UNITS WITH HEAT PUMP COILS AS STATED IN EQUIPMENT SCHEDULE.

DELIVERY, STORAGE, AND HANDLING
STORE IN A CLEAN DRY PLACE AND PROTECT FROM WEATHER AND CONSTRUCTION TRAFFIC. HANDLE CAREFULLY TO AVOID DAMAGE TO COMPONENTS, ENCLOSURES, AND FINISH.

ENVIRONMENTAL REQUIREMENTS
DO NOT OPERATE UNITS FOR ANY PURPOSE, TEMPORARY OR PERMANENT, UNTIL AHU IS CLEAN, FILTERS ARE IN PLACE, AND FAN HAS BEEN TEST RUN UNDER OBSERVATION.

PRODUCTS
ACCEPTABLE MANUFACTURERS
MITSUBISHI OR APPROVED EQUAL BASED ON SUBMITALS TO OWNER/ENGINEER.

INDOOR UNIT SHALL BE WALL MOUNTED DUCTLESS TYPE AIR HANDLING UNITS (HEAT PUMPS). UNITS SHALL CONSIST OF FILTER SECTION, ACCESS SECTION, HEAT PUMP COIL, AND FAN SECTION.
CASING
UNIT SHALL HAVE SINGLE WALL CONSTRUCTION WITH REMOVEABLE ACCESS DOORS.

FANS
PROVIDE SUPPLY FAN DESIGNED AND SUITABLE FOR CLASS OF SERVICE INDICATED IN THE UNIT SCHEDULE.
FAN SECTIONS SHALL HAVE FULL HEIGHT, REMOVABLE ACCESS DOORS FOR INSPECTION AND MAINTENANCE OF INTERNAL COMPONENTS.

COILS
COILS SHALL BE MANUFACTURED BY THE SAME COMPANY AS THE SUPPLIER OF THE AIR HANDLING UNIT. INSTALL COILS SUCH THAT HEADERS AND RETURN BENDS ARE ENCLOSED BY UNIT CASINGS.
CONSTRUCT COIL CASINGS OF GALVANIZED STEEL WITH FORMED END SUPPORTS AND TOP AND BOTTOM CHANNELS. INSTALL DRAIN CHANNELS TO DRAIN CONDENSATE TO DRAIN PANS WITHOUT FLOODING OR PASSING CONDENSATE THROUGH AIRSTREAM.

DRAIN PAN CONSTRUCTION
THE DRAIN PAN SHALL BE CONSTRUCTED OF GALVANIZED STEEL AND INSULATED TO PREVENT SWEATING. THE BOTTOM OF THE DRAIN PAN SHALL BE SLOPED IN TWO PLANES THAT PITCH THE CONDENSATE TO THE DRAIN CONNECTION. THE DRAIN PAN, WHEN THE UNIT IS INSTALLED AND TRAPPED PER THE MANUFACTURER'S INSTALLATION MANUAL SHALL BE DESIGNED TO FILL THE DRAIN OUTLET NO MORE THAN HALF OF THE OPENING.

FILTERS
PROVIDE FACTORY FABRICATED FILTERS. FILTER SECTION SHALL HAVE REMOVABLE ACCESS DOOR FOR FILTER REMOVAL.
PROVIDE STANDARD EFFICIENCY REPLACEABLE FILTERS.

ACCESS SECTIONS
ACCESS FOR INSPECTION AND CLEANING OF THE UNIT DRAIN PAN, COILS AND FAN SHALL BE PROVIDED. THE UNIT SHALL BE INSTALLED FOR PROPER ACCESS. ACCESS SECTION SHALL HAVE SINGLE WALL, REMOVABLE ACCESS DOOR ON ONE SIDE.

CONTROLS
PROVIDE REMOTE TEMPERATURE CONTROL MOUNTED ON WALL (APPROX. 40" A.F.F.). FOR ADA ACCESSIBLE ROOMS MOUNTING HEIGHT TO BE APPROX. 44" A.F.F. (VERIFY HEIGHT WITH ARCHITECT).

AIR COOLED CONDENSING UNIT (ACCU-1)
GENERAL
WARRANTY
ALL MATERIALS, PARTS, EQUIPMENT, AND WORKMANSHIP PROVIDED WITH THE AIR COOLED CONDENSING UNITS SHALL BE GUARANTEED TO BE FREE FROM DEFECTS FOR ONE YEAR FROM THE DATE OF START UP OR 18 MONTHS FROM DATE OF SHIPMENT, WHICHEVER COMES FIRST. ANY AND ALL EQUIPMENT OR MATERIAL FAILURES OR DEFECTS SHALL BE REPLACED BY THE SUPPLIER AT NO COST TO THE OWNER WITHIN WARRANTY PERIOD. COMPRESSOR WARRANTY SHALL BE FOR A PERIOD NOT LESS THAN 5 YEARS.

PRODUCTS
SUMMARY
THE CONTRACTOR SHALL FURNISH AND INSTALL AIR COOLED CONDENSING UNITS AS SHOWN AND SCHEDULED ON THE CONTRACT DOCUMENTS. THE UNIT(S) SHALL BE INSTALLED IN ACCORDANCE WITH THE MANUFACTURER'S RECOMMENDATIONS.

GENERAL UNIT DESCRIPTION
PROVIDE SELF CONTAINED, PACKAGED, FACTORY ASSEMBLED AND PRE-WIRED UNITS SUITABLE FOR OUTDOOR USE CONSISTING OF CABINET, COMPRESSOR(S), CONDENSING COIL AND FAN(S), INTEGRAL SUB COOLING CIRCUIT(S), FILTER DRYER(S) AND CONTROLS. PROVIDE EXPANSION VALVE(S) AT COOLING COILS.

CASING
HOUSE COMPONENTS IN 18 GAUGE ZINC COATED GALVANIZED STEEL FRAME AND PANELS WITH WEATHER RESISTANT, BAKED ENAMEL FINISH. UNITS SURFACE COATING SHALL BE CAPABLE OF WITHSTANDING 500 HOURS IN SALT SPRAY TEST.
MOUNT CONTROLS IN WEATHERPROOF PANEL PROVIDED WITH REMOVABLE PANELS AND/OR ACCESS DOORS WITH QUICK OPENING FASTENERS.

CONDENSER COILS
COILS: ALUMINUM FINS MECHANICALLY BONDED TO SEAMLESS COPPER TUBING. PROVIDE SUBCOOLING CIRCUIT(S). FACTORY LEAK TEST UNDER WATER TO 450 PSIG, AND VACUUM DEHYDRATE. SEAL WITH HOLDING CHARGE OF REFRIGERANT.

FANS AND MOTORS
VERTICAL/HORISONTAL DISCHARGE DIRECT DRIVEN PROPELLER TYPE CONDENSER FANS WITH FAN GUARD ON DISCHARGE. FANS SHALL BE STATICALLY AND DYNAMICALLY BALANCED.
WEATHERPROOF MOTORS SUITABLE FOR OUTDOOR USE, WITH PERMANENTLY LUBRICATED TOTALLY ENCLOSED OR OPEN CONSTRUCTION MOTORS SHALL BE PROVIDED AND SHALL HAVE BUILT IN CURRENT AND THERMAL OVERLOAD PROTECTION. MOTORS SHALL BE EITHER SLEEVE OR BALL BEARING TYPE.

COMPRESSORS
COMPRESSOR(S): PROVIDE DIRECT DRIVE HERMETIC, RECIPROCATING OR SCROLL TYPE COMPRESSOR(S) WITH CENTRIFUGAL OIL PUMP PROVIDING POSITIVE LUBRICATION TO MOVING PARTS AND AUTOMOTIVE TYPE PISTONS, RINGS TO PREVENT GAS LEAKAGE, INTERNAL SUCTION AND DISCHARGE VALVES AND CRANKCASE HEATER. MOTOR SHALL BE SUCTION GAS COOLED WITH INTERNAL TEMPERATURE AND CURRENT SENSITIVE MOTOR OVERLOADS. INTERNALLY ISOLATED MOTORS ON SPRINGS. EXTERNAL HIGH AND LOW PRESSURE CUTOUT DEVICES SHALL BE PROVIDED.

CONTROLS
PROVIDE FACTORY WIRED CONDENSING UNITS WITH 24 VOLT CONTROL CIRCUIT WITH INTERNAL FUSING AND CONTROL TRANSFORMERS, CONTACT PRESSURE LUGS AND/OR TERMINAL BLOCK FOR POWER WIRING. ELECTRICAL CONTRACTOR TO PROVIDE FIELD INSTALLED DISCONNECT SWITCH. UNITS SHALL HAVE SINGLE POINT POWER CONNECTIONS.

MISCELLANEOUS FEATURES
LOW AMBIENT CONTROL: ELECTRONIC HEAD PRESSURE CONTROL THAT ALLOWS OPERATION TO 0 DEGREES F OUTDOOR AMBIENT.

INSTALLATION
INSTALL IN ACCORDANCE WITH MANUFACTURER'S INSTRUCTIONS.
PROVIDE FOR CONNECTION TO ELECTRICAL SERVICES.
PROVIDE VIBRATION ISOLATION.
INSTALL UNITS ON A 4" CONCRETE BASE.
PROVIDE CONNECTION TO REFRIGERATION PIPING SYSTEM AND EVAPORATORS.
REFRIGERATION PIPING BETWEEN CONDENSING UNITS AND EVAPORATORS SHALL BE INSULATED TO PREVENT CONDENSATION ON PIPING EXTERIOR. INSULATION SHALL BE SUITABLE FOR OUTDOOR SERVICE.

CONDENSER COILS
COILS: ALUMINUM FINS MECHANICALLY BONDED TO SEAMLESS COPPER TUBING. PROVIDE SUBCOOLING CIRCUIT(S). FACTORY LEAK TEST UNDER WATER TO 450 PSIG, AND VACUUM DEHYDRATE. SEAL WITH HOLDING CHARGE OF REFRIGERANT.

FANS AND MOTORS
VERTICAL/HORISONTAL DISCHARGE DIRECT DRIVEN PROPELLER TYPE CONDENSER FANS WITH FAN GUARD ON DISCHARGE. FANS SHALL BE STATICALLY AND DYNAMICALLY BALANCED.
WEATHERPROOF MOTORS SUITABLE FOR OUTDOOR USE, WITH PERMANENTLY LUBRICATED TOTALLY ENCLOSED OR OPEN CONSTRUCTION MOTORS SHALL BE PROVIDED AND SHALL HAVE BUILT IN CURRENT AND THERMAL OVERLOAD PROTECTION. MOTORS SHALL BE EITHER SLEEVE OR BALL BEARING TYPE.

COMPRESSORS
COMPRESSOR(S): PROVIDE DIRECT DRIVE HERMETIC, RECIPROCATING OR SCROLL TYPE COMPRESSOR(S) WITH CENTRIFUGAL OIL PUMP PROVIDING POSITIVE LUBRICATION TO MOVING PARTS AND AUTOMOTIVE TYPE PISTONS, RINGS TO PREVENT GAS LEAKAGE, INTERNAL SUCTION AND DISCHARGE VALVES AND CRANKCASE HEATER. MOTOR SHALL BE SUCTION GAS COOLED WITH INTERNAL TEMPERATURE AND CURRENT SENSITIVE MOTOR OVERLOADS. INTERNALLY ISOLATED MOTORS ON SPRINGS. EXTERNAL HIGH AND LOW PRESSURE CUTOUT DEVICES SHALL BE PROVIDED.

CONTROLS
PROVIDE FACTORY WIRED CONDENSING UNITS WITH 24 VOLT CONTROL CIRCUIT WITH INTERNAL FUSING AND CONTROL TRANSFORMERS, CONTACT PRESSURE LUGS AND/OR TERMINAL BLOCK FOR POWER WIRING. ELECTRICAL CONTRACTOR TO PROVIDE FIELD INSTALLED DISCONNECT SWITCH. UNITS SHALL HAVE SINGLE POINT POWER CONNECTIONS.

MISCELLANEOUS FEATURES
LOW AMBIENT CONTROL: ELECTRONIC HEAD PRESSURE CONTROL THAT ALLOWS OPERATION TO 0 DEGREES F OUTDOOR AMBIENT.

INSTALLATION
INSTALL IN ACCORDANCE WITH MANUFACTURER'S INSTRUCTIONS.
PROVIDE FOR CONNECTION TO ELECTRICAL SERVICES.
PROVIDE VIBRATION ISOLATION.
INSTALL UNITS ON A 4" CONCRETE BASE.
PROVIDE CONNECTION TO REFRIGERATION PIPING SYSTEM AND EVAPORATORS.
REFRIGERATION PIPING BETWEEN CONDENSING UNITS AND EVAPORATORS SHALL BE INSULATED TO PREVENT CONDENSATION ON PIPING EXTERIOR. INSULATION SHALL BE SUITABLE FOR OUTDOOR SERVICE.

COMMONWEALTH OF VIRGINIA
PHILLIP L. GENTRY
Lic. No. 025757
01/03/2024
PROFESSIONAL ENGINEER

PLEASE READ BEFORE OPENING ELECTRONIC FILES: NORM SMITH:
DRAWINGS AND DESIGN IS ONE WORKMAN MAN'S ARCHITECTURE. DRAWINGS AND SPECIFICATIONS AND THE IDEAS DESIGNS AND ARRANGEMENTS EXPRESSED THEREIN ARE THE PROPERTY OF THE ARCHITECT AND ARE NOT TO BE DISCLOSED TO OTHERS FOR ANY PURPOSE OTHER THAN THE PROJECT CONTRACT WITH THE OWNER.
THE ARCHITECT'S DRAWINGS AND SPECIFICATIONS ARE INSTRUMENTS OF THE ARCHITECT'S PROFESSIONAL SERVICE AND SHALL REMAIN THE PROPERTY OF THE ARCHITECT WHETHER THE PROJECT FOR WHICH THEY ARE PREPARED IS EXECUTED OR NOT. THEY ARE TO BE RETURNED UPON REQUEST. THEY ARE NOT TO BE REPRODUCED, CHANGED OR COPIED IN ANY FORM OR MANNER WHATSOEVER, NOR ARE THEY TO BE ASSIGNED TO ANY THIRD PARTY, WITHOUT FIRST OBTAINING THE WRITTEN PERMISSION AND CONSENT OF THE ARCHITECT.
IF THERE EXISTS AN ISSUE OR DISPUTE ABOUT PRINTING TO SCALE, THE PLATTED DIMENSIONS OR DIMENSIONS OF THE ARCHITECT'S DRAWINGS SHALL GOVERN OVER ANY DIMENSIONS SCALED FROM THE DRAWINGS. THE ARCHITECT'S DRAWINGS ARE NOT TO BE SCALED FOR ANY PURPOSE.
DEPARTURES FROM DRAWINGS PRESENTED AS BID OR PERMIT DRAWINGS, OCCASIONED BY SITE CONDITIONS, OR OTHER REASONS, MUST BE APPROVED BY THE ARCHITECT AND OWNER BEFORE PROCEEDING WITH CONSTRUCTION.
VERIFY ALL DIMENSIONS AND FIELD CONDITIONS PRIOR TO CONSTRUCTION. IN THE EVENT OF ANY DISCREPANCY, NOTIFY THE ARCHITECT IMMEDIATELY. THE ARCHITECT IS NOT RESPONSIBLE FOR UNAUTHORIZED CHANGES AND USES.
VERIFY ALL BUILDING AND FIELD CONDITIONS, DIMENSIONS, AND CONDITIONS SHOWN ON THESE DRAWINGS AND REPORT ANY ERRORS, OMISSIONS, OR CONFLICTS TO THE ARCHITECT BEFORE PROCEEDING WITH THE WORK. THE ARCHITECT IS NOT RESPONSIBLE FOR THE CONSEQUENCES OF WORK PERFORMED UNDER CONDITIONS WHICH ARE NOT REPORTED TO THE ARCHITECT.
DRAWINGS ARE INCOMPLETE WITHOUT THE SPECIFICATIONS. THE ARCHITECT IS NOT RESPONSIBLE FOR THE CONSEQUENCES OF ANY VARIANCE BETWEEN PLACING AND CONSTRUCTION.

No.	Date	Revision Notes	Zone	Appr

No.	Date	Issue Notes
2	01/3/2024	release for bid
1	12/7/2023	permit subm

Date TBD
Designed By
Drawn By
Checked By
Reviewed By
Submitted By
Project Manager
Reason
Project 23703:culpeper
Drawing Code
CAD File Name
Plot Date

Design Firm NORMAN SMITH ARCHITECTURE
1341 H Street, Washington, DC 20002-4906
3637 Slate Mills Road, Spenryville, VA 22740
T 202.462.5686 www.normansmitharchitecture.com

Consultant VALLEY ENGINEERING
4901 Crowe Drive, Mount Crawford, VA 22841
T 540.434.6385 www.valleyesp.com

Project Title
Culpeper County
Community Pool Project
16388 Competition Drive
Culpeper, VA

Sheet Title
MECHANICAL
SPECIFICATIONS

Scale NTS

Sheet No.
M000.6
of

SECTION 233423 - CENTRIFUGAL UPBLAST POWER VENTILATORS (TAG: EF-3)

PART 1 - GENERAL

1.1 SUMMARY
A. FAN SHALL BE A SPUN ALUMINUM, G90 GALVANIZED, ROOF OR WALL-MOUNTED, DIRECT DRIVE, UPBLAST CENTRIFUGAL EXHAUST VENTILATOR.

1.2 SUBMITTALS
A. THE MANUFACTURER ASSUMES NO LIABILITY FOR THE USE OR RESULTS OF USE OF THIS DOCUMENT. THIS SPECIFICATION IS TO BE REVIEWED BY THE ENGINEER TO CONFIRM REQUIREMENTS OF THE PROJECT AND BUILDING CODES ARE MET.
B. AS THE MANUFACTURER CONTINUES PRODUCT DEVELOPMENT, IT RESERVES THE RIGHT TO CHANGE DESIGN AND SPECIFICATIONS WITHOUT NOTICE.
C. QUALITY ASSURANCE
1. ETL LISTED AND COMPLIES WITH UL705 (ELECTRICAL) STANDARDS AND CSA STD C22.2, NO 113.
2. FAN SHALL BEAR THE AMCA CERTIFIED RATING SEAL FOR AIR PERFORMANCE.
3. WHEELS SHALL BE BALANCED IN TWO PLANES AND DONE IN ACCORDANCE WITH AMCA STANDARD 204-96, BALANCE QUALITY AND VIBRATION LEVELS FOR FANS.

1.3 WARRANTY
A. ALL UNITS ARE PROVIDED WITH THE FOLLOWING 2-YEAR STANDARD WARRANTY FROM DATE OF SHIPMENT.
B. THIS WARRANTY SHALL NOT APPLY IF:
1. THE EQUIPMENT IS NOT INSTALLED BY A QUALIFIED INSTALLER PER THE MANUFACTURER'S INSTALLATION INSTRUCTIONS SHIPPED WITH THE PRODUCT.
2. THE EQUIPMENT IS NOT INSTALLED IN ACCORDANCE WITH FEDERAL, STATE, AND LOCAL CODES AND REGULATIONS.
3. THE EQUIPMENT IS MISUSED, NEGLECTED, OR NOT MAINTAINED PER THE MANUFACTURER'S MAINTENANCE INSTRUCTIONS.
4. THE EQUIPMENT IS NOT OPERATED WITHIN ITS PUBLISHED CAPACITY.
5. THE INVOICE IS NOT PAID WITHIN THE TERMS OF THE SALES AGREEMENT.
C. THE MANUFACTURER SHALL NOT BE LIABLE FOR INCIDENTAL AND CONSEQUENTIAL LOSSES AND DAMAGES POTENTIALLY ATTRIBUTABLE TO MALFUNCTIONING EQUIPMENT. SHOULD ANY PART OF THE EQUIPMENT PROVE TO BE DEFECTIVE IN MATERIAL OR WORKMANSHIP WITHIN THE 2-YEAR WARRANTY PERIOD, UPON EXAMINATION BY THE MANUFACTURER, SUCH PART WILL BE REPAIRED OR REPLACED BY THE MANUFACTURER AT NO CHARGE. THE BUYER SHALL PAY ALL LABOR COSTS INCURRED IN CONNECTION WITH SUCH REPAIR OR REPLACEMENT. EQUIPMENT SHALL NOT BE RETURNED WITHOUT MANUFACTURER'S PRIOR AUTHORIZATION. ALL RETURNED EQUIPMENT SHALL BE SHIPPED BY THE BUYER, FREIGHT PREPAID TO A DESTINATION DETERMINED BY THE MANUFACTURER.

PART 2 - PRODUCTS

2.1 GENERAL ASSEMBLY
A. THE FAN SHALL BE FACTORY ASSEMBLED, TESTED, AND SHIPPED AS A COMPLETE UNIT.
B. THE FOLLOWING SPECIFICATIONS, DELIVERING ALL CAPACITIES SCHEDULED AND CONFORMING TO THE DESIGN INDICATED HEREIN. ALTERNATE LAYOUTS OR DIMENSIONAL CHANGES WILL NOT BE ACCEPTED.

2.2 CONSTRUCTION
A. THE FAN WIND BAND SHALL BE CONSTRUCTED OF HEAVY GAUGE ALUMINUM OR G90 GALVANIZED AND SHALL BE SPUN ON AN AUTOMATIC LATHE TO PROVIDE CONSISTENT DIMENSIONS.
B. HORIZONTAL AND VERTICAL INTERNAL SUPPORTS SHALL BE USED TO FASTEN THE WIND BAND TO THE DISCHARGE APRON SECURELY. THIS PROVIDES RIGIDITY FOR HINGING AND ADDED STRENGTH TO REDUCE SHIPPING DAMAGE.
C. THE DISCHARGE APRON SHALL HAVE A ROLLED BEAD FOR ADDED STRENGTH.
D. BASE CORNERS SHALL BE WELDED TO PROVIDE STRENGTH AND SUPPORT FOR HINGING AND CLEANING AND PREVENT LEAKAGE INTO THE BUILDING.
E. THE FAN SHALL BEAR A PERMANENTLY ATTACHED NAMEPLATE DISPLAYING MODEL AND SERIAL NUMBER OF UNIT FOR FUTURE IDENTIFICATION.
F. NYLON WASHERS PROVIDE A TIGHT SEAL. ALL FASTENERS IN THE FAN HOUSING SHALL BE BACKED WITH NYLON WASHERS.
G. THE UNIT SHALL BE FACTORY TESTED AFTER ASSEMBLY.

2.3 CURB
A. THE CURB SHALL BE CONSTRUCTED OF GALVANIZED STEEL.
B. THE HEAVY DUTY G90 GALVANIZED CURB CAP SHALL HAVE FULLY WELDED CORNERS FOR ADDED STRENGTH AND LEAK PROTECTION.
C. FAN #1 HAS CURB OPTIONS:
D. HINGED BASE: ATTACHED
E. VENTED
F. PAINT OPTION: NOT PAINTED
G. FULL BOTTOM CORNERS

2.4 WHEEL
A. THE FAN WHEEL SHALL BE CENTRIFUGAL BACKWARD INCLINED AND NON-OVERLOADING.
B. THE WHEEL BLADES SHALL BE AERODYNAMICALLY DESIGNED TO MINIMIZE TURBULENCE, INCREASE EFFICIENCY AND REDUCE NOISE.
C. THE WHEEL BLADES SHALL BE WELDED TO THE WHEEL INLET CONE.
D. IF BALANCING WEIGHTS ARE REQUIRED, THEY SHALL BE RIVETED TO THE BLADES OR WHEEL.
E. THE WHEEL INLET SHALL OVERLAP THE FAN BASE INLET FOR MAXIMUM PERFORMANCE AND EFFICIENCY.
F. THE WHEEL SHALL BE FIRMLY ATTACHED TO THE MOTOR SHAFT WITH TWO SET SCREWS.

2.5 MOTOR
A. FAN(S) 1 MOTOR TYPE: TOTALLY ENCLOSED AIR OVER ELECTRONICALLY COMMUTATED MOTOR (TEAO-ECM).
B. MOTOR SHALL BE PERMANENTLY LUBRICATED AND RATED FOR CONTINUOUS DUTY.
C. FURNISHED AT THE SPECIFIED VOLTAGE, PHASE, AND ENCLOSURE. MOTOR SPEED SHALL BE VARIABLE, CONTROLLED USING AN INTEGRATED SPEED CONTROLLER.
D. MOTORS SHALL BE MOUNTED OUT OF THE AIRSTREAM AND FURNISHED AT THE SPECIFIED VOLTAGE, PHASE, AND ENCLOSURE.
E. MOTOR MOUNTING PLATE SHALL BE CONSTRUCTED OF HEAVY GAUGE GALVANIZED STEEL.
F. THE MOTOR COMPARTMENT SHALL BE COOLED BY OUTSIDE AIR DRAWN THROUGH AN EXTRUDED ALUMINUM CONDUIT TUBE.
G. AN INTEGRAL ELECTRICAL CONDUIT RUNNING FROM THE FAN BASE TO THE MOTOR COMPARTMENT IS PROVIDED FOR EASE OF INSTALLATION.
H. THE CONDUIT TUBE PASSAGE SHALL BE SEALED TO PREVENT NOISE. SILICONE RUBBER GROMMETS SHALL ISOLATE THE CONDUIT TUBE FROM THE FAN HOUSING.
I. THE MOTOR COMPARTMENT SHALL BE A TWO-PIECE CONSTRUCTION. THE CAP HAS QUICK-RELEASE CLIPS TO PROVIDE FAST AND EASY ACCESS TO THE MOTOR COMPARTMENT.

2.6 GREASE
A. THE GREASE SPOUT SHALL BE MADE OF ALUMINUM TUBING, WELDED TO THE FAN HOUSING. THE WELD SHALL BE FACTORY TESTED TO ENSURE NO LEAKS.
B. GREASE BOX.

2.7 ECM EXHAUST WIRING PACKAGES
A. FAN #1: ECM WIRING PACKAGE - PWM SIGNAL FROM ECPM03 PREWIRE (TELCO MOTOR), CCW ROTATION

2.8 OPTIONS AND ACCESSORIES
A. FAN #1 HAS FAN OPTIONS:
1. GREASE BOX.
2. ECM WIRING PACKAGE - PWM SIGNAL FROM ECPMO3 PREWIRE (TELCO MOTOR), CCW ROTATION.

PART 3 - EXECUTION

3.1 EXAMINATION
A. EXAMINE ALL AREAS AND CONDITIONS UNDER WHICH PACKAGE(S) ARE TO BE INSTALLED. DO NOT PROCEED WITH WORK UNTIL UNSATISFACTORY CONDITIONS HAVE BEEN CORRECTED IN A MANNER ACCEPTABLE TO INSTALLER.

3.2 INSTALLATION
A. INSTALL THE PACKAGE IN ACCORDANCE WITH MANUFACTURER'S INSTRUCTIONS, DRAWINGS, WRITTEN SPECIFICATIONS, MANUFACTURER'S INSTALLATION MANUAL, AND ALL APPLICABLE BUILDING CODES.

3.3 CONNECTIONS
A. ELECTRICAL CONNECTIONS CONFORM TO APPLICABLE REQUIREMENTS IN DIVISION 26 SECTIONS.

3.4 SYSTEM START-UP
A. SYSTEM START-UP IS PERFORMED BY A FACTORY-TRAINED SERVICE TECHNICIAN.

SECTION PREFABRICATED, FIRE-RESISTANCE RATED (DOUBLE WALL) GREASE DUCT FOR REMOVAL OF GREASE AND SMOKE LADEN VAPORS

PART 1 - GENERAL

1.1 SUMMARY
A. FACTOR-BUILT DOUBLE WALL GREASE DUCT.

1.2 SUBMITTALS
A. THE MANUFACTURER ASSUMES NO LIABILITY FOR THE USE OR RESULTS OF USE FROM THIS DOCUMENT. SPECIFICATIONS ARE TO BE REVIEWED BY THE ENGINEER TO CONFIRM THE REQUIREMENTS OF THE PROJECT AND MEET FEDERAL, STATE, AND LOCAL CODES.
B. AS THE MANUFACTURER CONTINUES PRODUCT DEVELOPMENT, IT RESERVES THE RIGHT TO CHANGE DESIGN AND SPECIFICATIONS WITHOUT NOTICE.

1.3 QUALITY ASSURANCE
A. LISTED AND COMPLIES WITH SAFETY STANDARDS UL1978, UL2221, CAN/ULC-S144 AND TESTING HAS BEEN EXTENDED TO RECOGNIZE ASTM E2336 AND AC101 DUE TO SIMILAR TESTING CRITERIA.
B. WHEN INSTALLED IN ACCORDANCE WITH THESE INSTRUCTIONS AND NATIONAL FIRE PROTECTION ASSOCIATION "NFPA 96"; STANDARD FOR VENTILATION CONTROL AND FIRE PROTECTION OF COMMERCIAL COOKING OPERATIONS.
C. UL 2221: STANDARD FOR FIRE RESISTIVE GREASE DUCT ENCLOSURE ASSEMBLIES. CHAPTER 7 OF THIS STANDARD REFERENCES A TEST LABELED INTERNAL FIRE TEST. SECTION 7.1.1 REFERENCES TWO INSTALLATION CONDITIONS, CONDITION A AND CONDITION B. CONDITION A REPRESENTS ALL INSTALLATION CONDITION EXCEPT FOR INSTALLATION WITHIN NON-VENTILATED COMBUSTIBLE ENCLOSURES. CONDITION B REPRESENTS INSTALLATION WITHIN A NON-VENTILATED COMBUSTIBLE ENCLOSURE.
D. MODEL DW-2R IS CLASSIFIED UNDER UL2221 (TEST OF FIRE RESISTIVE DUCT ENCLOSURE ASSEMBLIES) AS AN ALTERNATE TO 2-HR. FIRE RESISTIVE SHAFT ENCLOSURES WITH A REDUCED CLEARANCE TO COMBUSTIBLES (SIZES 5" TO 18" DIAMETER). MODEL 2R IS LISTED IN ACCORDANCE WITH THE REQUIREMENTS FOR DUCT ENCLOSURE CONDITION B.

1.4 WARRANTY
A. ALL UNITS SHALL BE PROVIDED WITH THE FOLLOWING STANDARD WARRANTIES:
1. GREASE DUCT SYSTEMS ARE WARRANTED TO BE FREE FROM DEFECTS IN MATERIAL AND WORKMANSHIP, UNDER NORMAL USE AND SERVICE, FOR A PERIOD OF 20-YEARS FROM THE DATE OF SHIPMENT.
B. THIS WARRANTY SHALL NOT APPLY IF:
1. THE EQUIPMENT IS NOT INSTALLED BY A QUALIFIED INSTALLER PER THIS INSTALLATION GUIDE; THE OPERATION MANUAL SHOULD BE KEPT WITH THE EQUIPMENT ONCE INSTALLATION IS COMPLETE.
2. THE EQUIPMENT IS NOT INSTALLED IN ACCORDANCE WITH FEDERAL, STATE, LOCAL CODES AND REGULATIONS.
3. THE EQUIPMENT DESIGN OR SIZING IS NOT APPROVED PER MANUFACTURER'S SPECIFICATIONS.
4. THE EQUIPMENT IS MISUSED, NEGLECTED, OR NOT MAINTAINED PER THE MANUFACTURER'S MAINTENANCE INSTRUCTIONS.
5. THE EQUIPMENT IS EXPOSED TO ELEVATED TEMPERATURES DUE TO A FIRE ORIGINATING IN THE BUILDING, HOOD, FAN, VENT, OR KITCHEN APPLIANCES.
6. THE EQUIPMENT IS NOT OPERATED WITHIN ITS PUBLISHED CAPACITY.
7. THE EQUIPMENT IS OPERATED, TESTED, OR STORED IN THE PRESENCE OF CHLORINES, SOLVENTS, REFRIGERANT VAPORS, CAUSTIC SUBSTANCES, HALOGENATED COMPOUNDS, OR OTHER CONDITIONS THAT COULD CAUSE CONDENSATION OF CORROSIVE MATERIALS WITHIN OR ON THE SYSTEM.
8. THE EQUIPMENT IS SUBSTITUTED OR CONNECTED WITH PARTS NOT MANUFACTURED PER ORIGINAL EQUIPMENT MANUFACTURER.
9. THE INVOICE IS NOT PAID WITHIN THE TERMS OF THE SALES AGREEMENT.
C. THE MANUFACTURER SHALL NOT BE LIABLE FOR INCIDENTAL AND CONSEQUENTIAL LOSSES AND DAMAGES POTENTIALLY ATTRIBUTABLE TO MALFUNCTIONING EQUIPMENT. SHOULD ANY PART OF THE EQUIPMENT PROVE TO BE DEFECTIVE IN MATERIAL OR WORKMANSHIP WITHIN THE 20-YEAR WARRANTY PERIOD, UPON EXAMINATION BY THE MANUFACTURER, SUCH PART WILL BE REPAIRED OR REPLACED BY MANUFACTURER AT NO CHARGE. THE BUYER SHALL PAY ALL LABOR COSTS INCURRED IN CONNECTION WITH SUCH REPAIR OR REPLACEMENT. EQUIPMENT SHALL NOT BE RETURNED WITHOUT MANUFACTURER'S PRIOR AUTHORIZATION, AND ALL RETURNED EQUIPMENT SHALL BE SHIPPED BY THE BUYER, FREIGHT PREPAID TO A DESTINATION DETERMINED BY THE MANUFACTURER.

PART 2 - PRODUCTS

2.1 GENERAL
A. INTENDED FOR USE WITH TYPE I KITCHEN HOODS, WHICH CONFORM TO THE REQUIREMENTS OF NFPA-96.

2.2 CONSTRUCTION
A. INNER DUCT SECTION WALL SHALL BE CONSTRUCTED OF .036" THICK, 430 TYPE STAINLESS STEEL AND BE AVAILABLE IN DIAMETERS 5" THROUGH 36".
B. OUTER DUCT SECTION WALL SHALL BE CONSTRUCTED OF 430 STAINLESS STEEL AT A MINIMUM OF .024" THICKNESS.
C. DUCT SHALL INCLUDE 2 LAYERS OF SUPER WOOL 607 PLUS OR INSULFRAX ELITE BLANKET BETWEEN THE INNER AND OUTER WALL INSULATION BETWEEN THE INNER AND OUTER WALL.
D. DUCT SECTIONS SHALL BE HELD TOGETHER BY THE MEANS OF A FORMED V CLAMP. V CLAMPS SHALL BE OF THE HEX-HEAD TYPE WITH FLANGED STUBS AND TAPERED "LEAD IN" THREADS.
E. DUCT JOINTS SHALL BE SEALED WITH 3M FIRE BARRIER 2000+.
F. DUCT WALL ASSEMBLY SHALL BE TESTED AND LISTED AT 3/4" OR ZERO INCH CLEARANCE, ACCORDING TO CLASSIFICATIONS.

PART 3 - EXECUTION

3.1 EXAMINATION
A. EXAMINE AREAS AND CONDITIONS FOR COMPLIANCE WITH REQUIREMENTS FOR INSTALLATION TOLERANCES AND OTHER CONDITIONS AFFECTING PERFORMANCE OF WORK.
B. IF UNSATISFACTORY CONDITIONS EXIST, CORRECT CONDITIONS PRIOR TO INSTALLATION.

3.2 APPLICATION
A. SUITABLE FOR USE IN COMMERCIAL COOKING INSTALLATIONS FOR THE REMOVAL OF SMOKE AND GREASE-LADEN VAPORS.

3.3 INSTALLATION
A. INSTALL IN ACCORDANCE WITH MANUFACTURER'S INSTRUCTIONS, DRAWINGS, WRITTEN SPECIFICATIONS, MANUFACTURER'S INSTALLATION MANUAL, AND ALL APPLICABLE BUILDING CODES.
B. DOUBLE WALL GREASE DUCT SYSTEMS AND SUPPORTS SHOULD NOT BE USED IN CAUSTIC ENVIRONMENTS, CONSULT THE FACTORY FOR ADDITIONAL INFORMATION.

3.4 CONNECTIONS
A. PIPING INSTALLATION REQUIREMENTS ARE SPECIFIED IN OTHER DIVISION 23 SECTIONS. DRAWINGS INDICATE THE GENERAL ARRANGEMENT OF PIPING, FITTINGS, AND SPECIALTIES. INSTALL THE DUCT SYSTEM TO ALLOW SERVICE AND MAINTENANCE.
B. DUCT INSTALLATION REQUIREMENTS ARE SPECIFIED IN OTHER DIVISION 23 SECTIONS. DRAWINGS INDICATE THE GENERAL ARRANGEMENT OF DUCTS.

SECTION 233813 - COMMERCIAL KITCHEN VENTILATION HOODS, LISTED COMMERCIAL KITCHEN HOODS

PART 1 - GENERAL

1.1 SUMMARY
A. THE ND2 SERIES IS A TYPE I, WALL CANOPY HOOD FOR USE OVER 450°F COOKING SURFACE TEMPERATURES. THE AERODYNAMIC DESIGN INCLUDES A MECHANICAL BAFFLE AND PERFORMANCE ENHANCING LIP FOR EXCEPTIONAL CAPTURE AND CONTAINMENT.
B. THE HOOD SHALL HAVE THE SIZE, SHAPE, AND PERFORMANCE SPECIFIED ON DRAWINGS.

1.2 SUBMITTALS
A. THE MANUFACTURER ASSUMES NO LIABILITY FOR THE USE OR RESULTS OF USE FROM THIS DOCUMENT. SPECIFICATIONS ARE TO BE REVIEWED BY THE ENGINEER TO CONFIRM THE PROJECT'S REQUIREMENTS AND MEET FEDERAL, STATE, AND LOCAL CODES AND REGULATIONS.
B. AS THE MANUFACTURER CONTINUES PRODUCT DEVELOPMENT, IT RESERVES THE RIGHT TO CHANGE DESIGN AND SPECIFICATIONS WITHOUT NOTICE.
C. THE MANUFACTURER SHALL SUPPLY COMPLETE COMPUTER GENERATED SUBMITTAL DRAWINGS, INCLUDING HOOD SECTION VIEW(S) AND HOOD PLAN VIEW(S). THESE DRAWINGS MUST BE AVAILABLE TO THE ENGINEER, ARCHITECT, AND OWNER FOR THEIR USE IN CONSTRUCTION, OPERATION, AND MAINTENANCE.

1.3 QUALITY ASSURANCE
A. THIS HOOD IS ETL-LISTED TO STANDARD UL710, ULC710, AND ULC-S646 WHEN INSTALLED IN ACCORDANCE WITH THESE INSTALLATION INSTRUCTIONS AND NATIONAL FIRE PROTECTION ASSOCIATION STANDARD "NFPA 96, STANDARD FOR VENTILATION CONTROL AND FIRE PROTECTION OF COMMERCIAL COOKING OPERATIONS."
B. BUILT-IN COMPLIANCE WITH NSF/ANSI STANDARD 2.
C. THE HOOD SHALL BE ETL LISTED AS:
1. "EXHAUST HOOD WITHOUT EXHAUST DAMPER."
2. ETL SANITATION LISTED AND BUILT IN ACCORDANCE WITH NFPA 96.
3. THE ETL LABEL SHALL LIST TEMPERATURE RATING(S) AND MINIMUM CFM/FT RATING(S).

1.4 WARRANTY
A. ALL UNITS SHALL BE PROVIDED WITH THE FOLLOWING STANDARD WARRANTY:
1. THIS EQUIPMENT IS WARRANTED TO BE FREE FROM DEFECTS IN MATERIALS AND WORKMANSHIP, UNDER NORMAL USE AND SERVICE, FOR A PERIOD OF 2-YEARS FROM DATE OF SHIPMENT.
B. THE MANUFACTURER SHALL NOT BE LIABLE FOR INCIDENTAL AND CONSEQUENTIAL LOSSES AND DAMAGES POTENTIALLY ATTRIBUTABLE TO MALFUNCTIONING EQUIPMENT. SHOULD ANY PART OF THE EQUIPMENT PROVE TO BE DEFECTIVE IN MATERIAL OR WORKMANSHIP WITHIN THE 2-YEAR WARRANTY PERIOD, UPON EXAMINATION BY THE MANUFACTURER, SUCH PART WILL BE REPAIRED OR REPLACED BY MANUFACTURER AT NO CHARGE. THE BUYER SHALL PAY ALL LABOR COSTS INCURRED IN CONNECTION WITH SUCH REPAIR OR REPLACEMENT. EQUIPMENT SHALL NOT BE RETURNED WITHOUT MANUFACTURER'S PRIOR AUTHORIZATION, AND ALL RETURNED EQUIPMENT SHALL BE SHIPPED BY THE BUYER, FREIGHT PREPAID TO A DESTINATION DETERMINED BY THE MANUFACTURER.
C. REFER TO MANUFACTURER'S OPERATION, INSTALLATION, AND MAINTENANCE (OIM) MANUAL FOR DETAILED DESCRIPTIONS OF WHAT IS/IS NOT COVERED AND CONTACT INFORMATION FOR WARRANTY CLAIMS.

PART 2 - PRODUCTS

2.1 GENERAL
A. CONSTRUCTION SHALL BE DEPENDENT ON THE STRUCTURAL APPLICATION TO MINIMIZE DISTORTION AND OTHER DEFECTS. ALL SEAMS, JOINTS, AND PENETRATIONS OF THE HOOD ENCLOSURE TO THE LOWER OUTERMOST PERIMETER, WHICH DIRECTS AND CAPTURES GREASE-LADEN VAPOR AND EXHAUST GASES, SHALL HAVE A LIQUID-TIGHT CONTINUOUS EXTERNAL WELD IN ACCORDANCE WITH NFPA 96.
B. DUCT SIZES, CFM, AND STATIC PRESSURE REQUIREMENTS SHALL BE AS SHOWN ON DRAWINGS. STATIC PRESSURE REQUIREMENTS SHALL BE PRECISE AND ACCURATE; AIR VELOCITY AND VOLUME INFORMATION SHALL BE ACCURATE WITHIN 1-FT INCREMENTS ALONG THE LENGTH OF THE VENTILATOR.

2.2 CONSTRUCTION
A. CONSTRUCTION SHALL BE TYPE 430 STAINLESS STEEL.
B. DOUBLE WALL INSULATED FRONT TO ELIMINATE CONDENSATION AND INCREASE RIGIDITY ON WIDE SIZES. THE INSULATION SHALL HAVE A FLEXURAL MODULUS OF 475 EI, MEET UL 181 REQUIREMENTS AND BE IN ACCORDANCE WITH NFPA 90A AND 90B.
C. HOOD SHALL BE EQUIPPED WITH A MINIMUM OF FOUR CONNECTIONS FOR HANGER RODS. HOOD LENGTHS GREATER THAN 12' WILL HAVE ADDED HANGERS.
D. EXHAUST DUCT COLLAR TO BE 4" HIGH WITH FLANGE.
E. THE GREASE DRAIN SYSTEM SHALL BE AN ENCLOSED INTEGRAL PART OF THE HOOD BACK AND HAVE SLOPES WITH AN EXPOSED, REMOVABLE 1/2 GREASE CUP TO FACILITATE CLEANING.
F. AN INTEGRAL BAFFLE TO DIRECT GREASE LADEN VAPORS TOWARD THE EXHAUST FILTER BANK.
G. HOOD SHALL BE FURNISHED WITH UL CLASSIFIED FILTERS, SUPPLIED IN SIZE AND QUANTITY AS REQUIRED BY VENTILATOR.
H. ALL SEAMS SHALL BE WELDED AND HAVE STAINLESS STEEL ON EXPOSED SURFACES.

2.3 LIGHTING
A. RECESSED ROUND LED FIXTURE AND LED LIGHT, 3500K WARM OUTPUT.

2.4 FILTERS
A. STAINLESS STEEL CAPTRATE SOLO FILTER WITH HOOK, ETL LISTED. PARTICULATE CAPTURE EFFICIENCY: 85% EFFICIENT AT 9 MICRONS, 76% EFFICIENT AT 5 MICRONS.

2.5 OPTIONS
A. FIRE SUPPRESSION SYSTEM: UL 300 FIRE SUPPRESSION SYSTEM.
B. OPTIONAL PERFORATED SUPPLY PLENUM SHALL PROVIDE MAKE-UP AIR DISCHARGED BELOW THE COOKING EQUIPMENT.
1. PERFORATED DIFFUSER PLATES SHALL BE INCLUDED IN THE DESIGN TO PROVIDE EVEN AIR DISTRIBUTION.
2. UNEXPOSED SURFACES SHALL BE CONSTRUCTED OF ALUMINIZED STEEL. PLENUM SHALL BE INSULATED TO PREVENT CONDENSATION.
3. PERFORATED SUPPLY PLENUM (PSP)
C. HOOD MOUNTED UTILITY CABINET - CABINET CAN STORE LISTED FIRE SUPPRESSION SYSTEM, LISTED COMPONENTS, PRE-WIRED ELECTRICAL CONTROLS.

2.6 ACCESSORIES
A. END PANEL(S) MAXIMIZE HOOD PERFORMANCE AND ELIMINATE THE EFFECTS OF CROSS DRAFTS IN THE KITCHEN. UNITS CONSTRUCTED OF STAINLESS STEEL AND SIZED ACCORDING TO HOOD WIDTH AND COOKING EQUIPMENT. EXPOSED EDGES HEMMED FOR SAFETY AND RIGIDITY.
SELECTED PANELS:
1. QUARTER END PANEL
B. SPLASH PANEL(S) SELECTED:
1. BACKSPLASH
C. WRAPPER(S) MAY BE INSTALLED FROM THE FACTORY OR FIELD INSTALLED. WRAPPER(S) SELECTED:
1. WRAPPER
D. MISCELLANEOUS OPTION(S) SELECTED:
1. INSULATION FOR TOP OF HOOD – FULLY INSULATED TOP OF HOOD.
2. INSULATION FOR BACK OF HOOD – BACKSIDE OF HOOD IS FULLY INSULATED.
3. RISER SENSOR INSTALL – SENSOR SET-UP FOR 6" PLENUM.

PART 3 - EXECUTION

3.1 EXAMINATION
A. EXAMINE AREAS AND CONDITIONS UNDER WHICH THE SYSTEM IS INSTALLED. DO NOT PROCEED WITH WORK UNTIL UNSATISFACTORY CONDITIONS HAVE BEEN CORRECTED IN A MANNER ACCEPTABLE TO INSTALLER.

3.2 INSTALLATION
A. INSTALL IN ACCORDANCE WITH MANUFACTURER'S INSTRUCTIONS, DRAWINGS, WRITTEN SPECIFICATIONS, MANUFACTURER'S INSTALLATION MANUAL, AND ALL APPLICABLE BUILDING CODES.

SECTION 212300 - CHEMICAL FIRE-EXTINGUISHING SYSTEMS

PART 1 - GENERAL

1.1 SUMMARY
A. TANK FIRE SUPPRESSION IS A PRE-ENGINEERED, STORED-PRESSURE WET CHEMICAL SOLUTION EXTINGUISHING SYSTEM.

1.2 SUBMITTALS
A. THE MANUFACTURER ASSUMES NO LIABILITY FOR THE USE OR RESULTS OF USE FROM THIS DOCUMENT. SPECIFICATIONS ARE TO BE REVIEWED BY THE ENGINEER TO CONFIRM THE REQUIREMENTS OF THE PROJECT AND MEET FEDERAL, STATE, AND LOCAL CODES.
B. AS THE MANUFACTURER CONTINUES PRODUCT DEVELOPMENT, IT RESERVES THE RIGHT TO CHANGE DESIGN AND SPECIFICATIONS WITHOUT NOTICE.

1.3 QUALITY ASSURANCE
A. THE TANK FIRE SUPPRESSION SYSTEM IS ETL LISTED IN ACCORDANCE WITH ANSI/CAN/UL/ULC 300, ULCORD-C 1254.6.
B. MICROPROCESSOR-BASED CONTROL BOARD SHALL BE ETL LISTED TO UL STANDARD 864 AND CAN/ ULC-S527-11.
C. TANK FIRE SUPPRESSION SYSTEM INTENDED FOR INSTALLATION AND FOR USE IN ACCORDANCE WITH THE NATIONAL FIRE PROTECTION ASSOCIATION STANDARDS:
1. WET CHEMICAL EXTINGUISHING SYSTEMS, NFPA 17A
2. NATIONAL ELECTRICAL CODE, NFPA 70
3. NATIONAL FIRE ALARM & SIGNALING CODE, NFPA 72
D. NEW YORK CITY AND FDNY APPROVED UNDER COA# 5870.
E. CALIFORNIA STATE FIRE MARSHAL (CFSM), LISTING NO. 7085-2199:0502.

1.4 WARRANTY
A. ALL UNITS SHALL BE PROVIDED WITH THE FOLLOWING STANDARD WARRANTIES:
1. TANK FIRE SUPPRESSION SYSTEM IS WARRANTED TO BE FREE FROM DEFECTS IN MATERIALS AND WORKMANSHIP, UNDER NORMAL USE AND SERVICE, FOR A PERIOD OF 60-MONTHS FROM DATE OF SHIPMENT.
B. WARRANTY DOES NOT COVER CONSUMABLE PRODUCTS SUCH AS BATTERIES AND NITROGEN.
C. THE MANUFACTURER SHALL NOT BE LIABLE FOR INCIDENTAL AND CONSEQUENTIAL LOSSES AND DAMAGES POTENTIALLY ATTRIBUTABLE TO MALFUNCTIONING EQUIPMENT. SHOULD ANY PART OF THE EQUIPMENT PROVE TO BE DEFECTIVE IN MATERIAL OR WORKMANSHIP WITHIN THE 60-MONTH WARRANTY PERIOD, UPON EXAMINATION BY THE MANUFACTURER, SUCH PART WILL BE REPAIRED OR REPLACED BY MANUFACTURER AT NO CHARGE. THE BUYER SHALL PAY ALL LABOR COSTS INCURRED IN CONNECTION WITH SUCH REPAIR OR REPLACEMENT. EQUIPMENT SHALL NOT BE RETURNED WITHOUT MANUFACTURER'S PRIOR AUTHORIZATION, AND ALL RETURNED EQUIPMENT SHALL BE SHIPPED BY THE BUYER, FREIGHT PREPAID TO A DESTINATION DETERMINED BY THE MANUFACTURER.
D. REFER TO MANUFACTURER'S OPERATION, INSTALLATION, AND MAINTENANCE (OIM) MANUAL FOR DETAILED DESCRIPTIONS OF WHAT IS/IS NOT COVERED AND CONTACT INFORMATION FOR WARRANTY CLAIMS.

PART 2 - PRODUCTS

2.1 GENERAL
A. A PRE-ENGINEERED, FIXED PIPE, AUTOMATIC WET CHEMICAL AGENT FIRE SUPPRESSION SYSTEM FOR PROTECTION OF ALL HAZARD AREAS ASSOCIATED WITH COOKING OPERATIONS, INCLUDING EXHAUST HOODS, PLENUMS, DUCTWORK, AND COOKING APPLIANCES.

2.2 COMPONENTS
A. EXHAUST HOOD FIRE SYSTEM COMPONENTS TO BE FACTORY INSTALLED.
B. CYLINDER AND VALVE ASSEMBLY
1. THE CYLINDERS SHALL HAVE A TIN-NICKEL ALLOY PLATED BRASS VALVE WITH PRESSURE GAUGE.
2. WET CHEMICAL AGENT SHALL BE CONTAINED IN ONE OR MORE STORED PRESSURE DOT/TC RATED STEEL CYLINDER AND VALVE ASSEMBLIES.
3. EACH CYLINDER IS FACTORY-FILLED WITH LIQUID FIRE SUPPRESSANT AND PRESSURIZED TO 200 PSIG AT 70°F.
4. MAXIMUM CYLINDER FLOW POINTS = 20.
C. DISTRIBUTION NOZZLES
1. NOZZLES SHALL BE LOCATED TO PROTECT THE EXHAUST DUCTS, PLENUMS, AND ALL COOKING APPLIANCES REQUIRING PROTECTION.
2. ALL NOZZLES SHALL BE EQUIPPED WITH A METAL BLOW OFF CAP. THE CAP PREVENTS CONTAMINATION FROM ENTERING THE PIPE NETWORK AND IS DESIGNED TO POP-OFF UPON SYSTEM DISCHARGE, ALLOWING AGENT TO FLOW TO THE PROTECTED HAZARD AREA.
3. ALL NOZZLES SHALL INCORPORATE A STAMPED PART NUMBER TO EASILY IDENTIFY NOZZLE TYPE.
D. DISTRIBUTION SYSTEM
1. THE DISTRIBUTION SYSTEM SHALL CONSIST OF COPPER, SCHEDULE 40 BLACK IRON, CHROME-PLATED OR STAINLESS-STEEL PIPE AND FITTINGS. ALL EXPOSED PIPING AND FITTINGS MUST BE CHROME-PLATED OR STAINLESS STEEL.
2. FITTINGS SHALL BE MINIMUM CLASS 150. GALVANIZED FITTINGS SHALL NOT BE USED.
E. SUPPRESSION SYSTEM
1. THE SYSTEM CONTROL EQUIPMENT SHALL BE CAPABLE OF ALL FUNCTIONS ASSOCIATED WITH AUTOMATICALLY AND MANUALLY DISCHARGING THE WET CHEMICAL AGENT FROM ALL CYLINDER AND VALVE ASSEMBLIES, INCLUDING AUTOMATIC SHUTDOWN OF THE HEAT SOURCE OR FUEL AND ELECTRICAL POWER TO ALL PROTECTED AREAS UPON SYSTEM DISCHARGE.
2. LIQUID FIRE SUPPRESSANT SHALL BE AQUEOUS POTASSIUM CARBONATE (APC).
3. ALL MECHANICAL COMPONENTS OF THE ACTUATOR KIT SHALL BE ENCLOSED.
4. THE ACTUATOR KIT SHALL BE CAPABLE OF AUTOMATIC OR MANUAL ACTIVATION MEANS.
5. SUPERVISORY PRESSURE SWITCH ADDED TO MONITOR OPERATING SYSTEM PRESSURE.
6. FOR MANUAL ACTIVATION, AN ELECTRICALLY OPERATED MANUAL RELEASE SHALL BE USED TO ACTUATE THE SYSTEM MANUALLY.
7. FOR AUTOMATIC ACTIVATION, THE SYSTEM WILL BE ACTIVATED BY A FIRESTAT (HEAT) DETECTOR.
F. ELECTRICAL
1. ELECTRICAL DIVISION TO PROVIDE SHUNT TRIP BREAKERS AT MAIN POWER PANEL, OR DISCONNECTS, AS DESIGNATED BY THE ELECTRICAL ENGINEER; INTERCONNECTION PROVIDED AT HOOD CONTROL PANEL FOR THE SIGNAL TO SHUT DOWN ALL ELECTRICITY IN AND UNDER THE EXHAUST HOOD. SHUNT TRIPS/DISCONNECTS TO ACCOMPLISH SHUT OFF OF ELECTRICITY IN THE EVENT OF FIRE SYSTEM ACTIVATION BY OTHERS.
2. PRINTED CIRCUIT BOARD WITH MICROPROCESSOR-BASED CONTROLLER THAT PROVIDES ALL THE NECESSARY MONITORING, TIMING, AND SUPERVISION FUNCTIONS REQUIRED FOR THE RELIABLE OPERATION OF THE FIRE SYSTEM.
3. INDEPENDENT SUPERVISED LOOPS INCORPORATE REDUNDANCY AND FAULT DETECTION.
4. REAL-TIME CLOUD-BASED M

AE SPECIFICATION – MODULATING ELECTRIC HEATER (MODEL: AE)

DESCRIPTION: AN ELECTRIC HEATING AND VENTILATING UNIT(S), AS INDICATED ON THE DRAWINGS SHALL BE FURNISHED. ORIENTATION SHALL BE HORIZONTAL (DOWN) (SIDE) DISCHARGE. UNIT(S) SHALL BE FACTORY ASSEMBLED, TESTED AND SHIPPED AS A COMPLETE PACKAGED ASSEMBLY, FOR INDOOR OR OUTDOOR MOUNTING, CONSISTING OF THE FOLLOWING:

1. ELECTRIC INSERT;
2. CENTRIFUGAL BLOWER (FORWARD-CURVED DOUBLE WIDTH/DOUBLE INLET OR BACKWARD INCLINED);
3. MOTOR STARTER WITH THERMAL OVERLOAD PROTECTION;
4. MOTOR AND DRIVE ASSEMBLY;
5. AIRFLOW SWITCH AND BLOWER INTERLOCK SAFETY EQUIPMENT, AND
6. TEMPERATURE CONTROL SYSTEM.

APPROVALS: UNIT(S) SHALL BE FACTORY TESTED, AND THE ELECTRIC COIL SHALL BEAR THE UL / CSA LABEL.
CONSTRUCTION:
HOUSING
UNIT HOUSING SHALL BE CONSTRUCTED OF 20 GAUGE G-90 GALVANIZED STEEL. THE WALL PANELS AND ROOF PANELS SHALL BE FABRICATED BY FORMING DOUBLE-STANDING, SELF-LOCKING SEAMS THAT REQUIRE NO ADDITIONAL SUPPORT. THE FLOOR AND WALL PANELS SHALL BE CAULKED AIR TIGHT WITH A SILICONE CAULK. ALL CASING PANELS SHALL BE ATTACHED WITH SHEET-METAL SCREWS OR RIVETS, WHICH CAN BE REMOVED TO SERVICE LARGE COMPONENTS IN THE FIELD. THE UNIT BASE SHALL BE SUITABLE FOR CURB OR FLAT MOUNT. HOUSING CONSTRUCTION SHOULD BE SUITABLE FOR OUTDOOR OR INDOOR INSTALLATION.
AN OBSERVATION PORT SHALL BE LOCATED ON THE EXTERIOR OF THE UNIT FOR OBSERVING THE COIL. ALL CONTROLS AND ELECTRICAL COMPONENTS SHALL BE MOUNTED WITHIN THE CONTROL VESTIBULE. THE VESTIBULE SHALL BE AN INTEGRAL PART OF THE UNIT, NOT EXTEND OUTSIDE THE EXTERIOR CASING OF THE UNIT, AND NOT BE EXPOSED TO THE MAIN AIR STREAM.
THE VESTIBULE FULL-SIZE DOOR SHALL PROVIDE EASY ACCESS TO THE CONTROLS. THE BLOWER DOOR SHALL PROVIDE EASY ACCESS TO THE BLOWER, MOTOR, AND DRIVES. ACCESS DOORS SHALL BE PROVIDED ON BOTH ENDS OF THE UNIT PROVIDING FULL ACCESS TO EVERY PART OF THE UNIT.

BASE
THE BASE SHALL BE CONSTRUCTED OF GALVANIZED STEEL FOR IMPROVED RIGIDITY. THE BASE SHALL BE STRUCTURALLY REINFORCED TO ACCOMMODATE THE BLOWER ASSEMBLY AND BURNER.

BLOWER
WHEELS SHALL BE BALANCED IN TWO PLANES AND DONE IN ACCORDANCE WITH AMCA STANDARD 204-96, BALANCE QUALITY AND VIBRATION LEVELS FOR FANS. THE WHEEL BLADES SHALL BE AERODYNAMICALLY DESIGNED TO MINIMIZE TURBULENCE, INCREASE EFFICIENCY, AND REDUCE NOISE. THE WHEEL BLADES SHALL BE SECURELY ATTACHED TO THE WHEEL INLET RING. THE WHEEL SHALL BE FIRMLY ATTACHED TO THE FAN SHAFT WITH SET SCREWS AND KEYS. THE BLOWER ASSEMBLY SHALL BE ISOLATED FROM THE FAN STRUCTURE WITH VIBRATION ISOLATORS.
BLOWER CAPACITY SHALL BE 850 CFM AT 70 DEGREES F STANDARD AIR, 0.5 EXTERNAL STATIC PRESSURE.
EXTERNAL STATIC: THE SUM OF DUCT LOSS PLUS DUCT COMPONENT STATIC. EXAMPLE: LOUVERS, DIFFUSERS. ALL BLOWERS SHALL BE TESTED AND SET AT RATED SPEED AFTER BEING INSTALLED IN THE FACTORY-ASSEMBLED UNIT.

BELT DRIVE
BLOWER(S) SHALL BE FORWARD-CURVED, CENTRIFUGAL, CLASS I OR II (DEPENDING ON REQUIREMENTS OF THE APPLICATION), DOUBLE WIDTH, DOUBLE INLET, AND CONSTRUCTED OF G-90 GALVANIZED STEEL. UNIT SHALL HAVE A HEAVY-DUTY, SOLID-STEEL SHAFT.

DIRECT DRIVE
DIRECT DRIVE BLOWER ASSEMBLY SHALL CONSIST OF A CENTRIFUGAL BACKWARD INCLINED, NON-OVERLOADING WHEEL SECURED DIRECTLY TO A HEAVY DUTY, BALL BEARING TYPE MOTOR VIA TWO SET SCREWS. THE MOTOR AND WHEEL ASSEMBLY SHALL BE MOUNTED TO A HEAVY GAUGE GALVANIZED STEEL FRAME. THE MOTOR SHALL BE CONTROLLED BY A VARIABLE FREQUENCY DRIVE, ALLOWING FOR VARIABLE AIRFLOW WITHOUT THE NEED OF BELTS AND PULLEYS.

MOTOR & MOTOR COMPARTMENT
MOTORS SHALL BE HEAVY DUTY BALL BEARING TYPE AND FURNISHED AT THE SPECIFIED VOLTAGE, PHASE, AND ENCLOSURE. MOTOR MOUNTING PLATE SHALL BE CONSTRUCTED OF HEAVY GAUGE GALVANIZED STEEL AND SHALL BE DESIGNED TO PROVIDE EASY ADJUSTMENT OF BELT TENSION. BLOWER MOTOR SHALL BE SUITABLE FOR OPERATION ON 208 VOLTS, 60 HZ, 3 PHASE POWER. BLOWER MOTOR SHALL BE A 0.5 HP MOTOR, OPEN DRIP PROOF.

SHAFT & BEARINGS
SHAFTS SHALL BE PRECISION GROUND AND POLISHED. HEAVY DUTY, PRE-LUBRICATED BEARINGS SHALL BE SELECTED FOR A MINIMUM (L50) LIFE IN EXCESS OF 200,000 HOURS OF OPERATION AT MAXIMUM CATALOGED OPERATING SPEED. THEY SHALL BE DESIGNED FOR, AND INDIVIDUALLY TESTED, SPECIFICALLY FOR USE IN AIR HANDLING APPLICATIONS.

BELTS & DRIVES (BELT DRIVE UNITS ONLY)
BELTS SHALL BE OIL AND HEAT RESISTANT, NON-STATIC, GRIP-NOTCH TYPE. DRIVES SHALL BE CAST TYPE, PRECISION MACHINED AND KEYED, AND SECURELY ATTACHED TO THE FAN AND MOTOR SHAFTS. FAN OPERATING SPEED SHALL BE FACTORY SET USING ADJUSTABLE PITCH MOTOR PULLEYS; MOTORS OVER 3 HP WILL COME STANDARD WITH DOUBLE GROOVE PULLEYS.

SCR ELECTRIC COIL
ELECTRIC COILS ARE CONTROLLED USING SCR CONTROLS. SCR IS A TIME PROPORTIONING TYPE CONTROLLER THAT MODULATES THE HEATER AND SUPPLIES THE EXACT AMOUNT OF POWER TO MATCH THE HEAT DEMAND.
THE SCR ELECTRIC COIL SHALL BE SIZED TO PROVIDE AN OUTPUT OF 20 KW.
THE SCR ELECTRIC HEATER SHALL BE CAPABLE OF HEATING THE ENTIRE AIR SUPPLY FROM 10 °F TO 69 °F (59 °F TEMPERATURE RISE).
REAR ACCESS DOORS OR A REMOVABLE LID WILL PROVIDE COMPLETE ACCESS TO THE SCR ELECTRIC COIL.

SAFETY CONTROLS:
STANDARD
1. MOTOR STARTER WITH ADJUSTABLE OVERLOADS
2. AIR-FLOW SAFETY SWITCH
3. BLOWER INTERLOCK RELAY
4. HIGH-TEMPERATURE LIMIT SWITCH
5. NON-FUSED DISCONNECT
6. CASING INSULATION SHALL BE 1" X 1.5# DENSITY WITH A FOIL FACE

OPTIONAL
1. ADJUSTABLE LOW TEMPERATURE BLOWER-SAFETY CONTROL WITH BYPASS TIMER TO SHUT DOWN UNIT IF DISCHARGE TEMPERATURE DROPS BELOW SETTING.
2. OPERATING LIGHTS MOUNTED IN A REMOTE-CONTROL PANEL TO INDICATE POWER, HEAT ON, AND BLOWER ON.

ACCESSORIES:
1. INLET DAMPERS: MANUFACTURER SHALL PROVIDE AND INSTALL ON UNIT (WHEN POSSIBLE), A TWO-POSITION, MOTOR-OPERATED DAMPER WITH INTERNAL END SWITCH; THIS ENERGIZES THE BLOWER-STARTER CIRCUIT WHEN THE DAMPER IS 80% OPEN. BLADES SHALL BE A MAXIMUM OF 6" WIDE 16 GAUGE G-90 GALVANIZED STEEL AND SHALL BE MADE TO GUARANTEE THE ABSENCE OF NOTICEABLE VIBRATION AT DESIGN AIR VELOCITIES. DAMPER BLADES TO BE MOUNTED ON FRICTION-FREE SYNTHETIC BEARINGS. DAMPER EDGES SHALL HAVE PVC COATED POLYESTER FABRIC MECHANICALLY LOCKED INTO THE BLADE EDGE. JAMB SEALS TO BE FLEXIBLE METAL, COMPRESSION TYPE.

2. FILTERS: THE FILTERS SHALL BE 2" THICK, ALUMINUM MESH, AND COATED WITH SUPER-FILTER ADHESIVE. ALUMINUM-MESH FILTERS SHALL HAVE ALUMINUM FRAMES; MEDIA TO BE LAYERS OF SLIT AND EXPANDED ALUMINUM WHICH VARY IN PATTERN TO OBTAIN MAXIMUM DEPTH LOADING.

   FILTER SECTION: SHALL BE (INSULATED) (UNINSULATED) CONSTRUCTED OF G-90 GALVANIZED STEEL WITH FILTERS SUPPORTED BY INTERNAL SLIDES AND WITH REMOVABLE ACCESS PANELS. FILTERS SHALL BE PROVIDED IN A V-BANK ARRANGEMENT.

3. FRESH-AIR INLET HOOD: SHALL BE CONSTRUCTED OF G-90 GALVANIZED STEEL WITH BIRD SCREEN.

4. FRESH-AIR INLET HOOD/FILTER COMBINATION: SHALL BE CONSTRUCTED OF G-90 GALVANIZED STEEL WITH BIRD SCREEN AND 2" WASHABLE FILTERS SUPPORTED BY INTERNAL SLIDES MOUNTED IN THE INLET FACE OF THE HOOD.

5. DISCHARGE DIFFUSERS: SHALL BE CONSTRUCTED OF G-90 GALVANIZED STEEL WITH HORIZONTAL AND VERTICAL BLADES CAPABLE OF FOUR-WAY DIFFUSION.

6. CURB: 20" CURB SHALL BE CONSTRUCTED OF 18 GAUGE G-90 GALVANIZED STEEL AS A COMPLETED WELDED ASSEMBLY.

7. COOLING COIL SECTION: COOLING COIL SECTION SHALL BE BOLTED DIRECTLY TO THE DISCHARGE OF THE BLOWER SECTION. COIL SECTION TO BE DESIGNED TO FIT ONTO COMMON CURB WITH MAIN UNIT. BASE OF COIL SECTION TO BE CONSTRUCTED THE SAME AS THE MAIN UNIT, WITH DOUBLE PITCH STAINLESS STEEL DRAIN PAN FOR COIL. CASING AND ROOF TO BE 20 GAUGE G-90 GALVANIZED CONSTRUCTION. INSIDE OF SECTION TO BE FULLY INSULATED WITH FOIL BACK INSULATION. DX OR CHILLED WATER COIL TO MEET SCHEDULED REQUIREMENTS.

TEMPERATURE CONTROL SYSTEMS:
DISCHARGE AIR TEMPERATURE CONTROLS SHALL BE SHIPPED AS A STANDARD FEATURE ON ALL ELECTRIC HEATERS. OPTIONAL ROOM CONTROLS SHALL BE AVAILABLE.

WIRING AND ELECTRICAL:
THE CONTROL CIRCUIT VOLTAGE SHALL BE 115 VOLTS. A CONTROL TRANSFORMER SHALL BE PROVIDED, WHEN REQUIRED. THE CONTROL WIRING SHALL BE CARRIED IN WIRE CHANNEL OR CONDUIT. WIRING IN CONTROL ENCLOSURES SHALL BE IN ACCORDANCE WITH THE NATIONAL ELECTRICAL CODE AND THE LOCAL CODE, AS IT MAY AFFECT THE INSTALLATION. MOTOR STARTER SHALL BE PROVIDED. STARTER SHALL BE LINE VOLTAGE, DEFINITE PURPOSE TYPE.
UNIT(S) SHALL BE COMPLETE WITH ALL ITEMS SUCH AS RELAYS, STARTERS, SWITCHES, SAFETY CONTROLS, CONDUIT AND WIRE, AS PREVIOUSLY MENTIONED AND AS REQUIRED FOR PROPER OPERATION. ALL FACTORY-MOUNTED CONTROLS SHALL BE FACTORY PREWIRED TO THE UNIT CONTROL PANEL.

FACTORY TESTED:
UNIT(S) SHALL BE OPERATED, TESTED, AND SET AT THE FACTORY USING JOB-SITE CONDITIONS FOR ELECTRICAL AND GAS INPUT. ALL OPERATING AND SAFETY CONTROLS SHALL BE TESTED AND SET AT THE FACTORY. ADJUSTABLE, OR FIXED SHEAVES, SHALL BE SET FOR PROPER RPM AT SPECIFIED CONDITIONS.

SERVICE AND PARTS:
THE SUPPLIER SHALL FURNISH AS BUILT WIRING CONNECTION AND CONTROL-CIRCUIT DIAGRAMS, DIMENSION SHEETS, AND A FULL DESCRIPTION OF THE UNIT(S). SERVICE MANUALS, SHOWING SERVICE AND MAINTENANCE REQUIREMENTS, SHALL BE PROVIDED WITH EACH UNIT.

COMMONWEALTH OF VIRGINIA
PHILLIP L. GENTRY
Lic. No. 025757
01/03/2024
PROFESSIONAL ENGINEER

PLEASE READ BEFORE OPENING ELECTRONIC FILES: NORM SMITH:
DRAWINGS AND DESIGN IS NORMAN SMITH ARCHITECTURE.
DRAWINGS AND SPECIFICATIONS AND THE IDEAS DESIGNS AND ARRANGEMENTS REPRESENTED THEREIN ARE THE PROPERTY OF THE ARCHITECT AND PRIBMAN, WITHOUT EXCEPTION, THE PROPERTY OF THE ARCHITECT AND MAY NOT BE USED FOR ANY PURPOSE NOT SPECIFICALLY AGREED TO IN WRITING BY THE ARCHITECT. THEY MAY NOT BE REPRODUCED, CHANGED OR COPIED IN ANY FORM OR MANNER WHATSOEVER, NOR ARE THEY TO BE ASSIGNED TO ANY THIRD PARTY, WITHOUT FIRST OBTAINING THE WRITTEN CONSENT OF THE ARCHITECT. ALL RIGHTS ARE RESERVED.
VERIFY ALL DIMENSIONS AND FIELD CONDITIONS BEFORE CONTINUING WITH WORK. REPORT ANY ERRORS, OMISSIONS, OR CONFLICTS TO THE ARCHITECT.
DRAWINGS AND SPECIFICATIONS REPRESENT THE FINISHED WORK. THE CONTRACTOR IS TO FURNISH ANY ADDITIONAL MATERIALS OR LABOR NECESSARY TO COMPLETE ANY PARTS OF THE WORK INFERABLE FROM THE DOCUMENTS AS BEING PART OF A COMPLETE, FINISHED, OPERATIONAL SYSTEM.
DO NOT SCALE DRAWINGS. USE ONLY DIMENSIONS WRITTEN. REPORT ANY DISCREPANCIES TO THE ARCHITECT.
IF THIS FILE IS A VIDEO OR FILMS IN LIEU OF PAPER PRINTS, THE FILE SHALL BE OFFICIAL AND GOVERNED BY THE ARCHITECT'S STANDARD LICENSE AGREEMENT. THE ARCHITECT'S STANDARD LICENSE AGREEMENT IS AVAILABLE UPON REQUEST. THE ARCHITECT'S STANDARD LICENSE AGREEMENT SHALL GOVERN ANY DISCREPANCIES OR CONFLICTS BETWEEN THE AGREEMENT AND THE DOCUMENTS OR DATA RECEIVED.
IF THE ARCHITECT'S DOCUMENTS REPRESENTING THE DESIGN OF THE PROJECT ARE PROVIDED IN ELECTRONIC FORMAT, THE ARCHITECT MAKES NO REPRESENTATIONS AS TO THE COMPATIBILITY OF THE INFORMATION WITH ANY HARDWARE OR SOFTWARE. THE ARCHITECT'S DOCUMENTS ARE PROVIDED "AS IS" AND THE ARCHITECT DISCLAIMS ALL WARRANTIES, EXPRESS OR IMPLIED, INCLUDING, BUT NOT LIMITED TO, THE IMPLIED WARRANTIES OF MERCHANTABILITY AND FITNESS FOR A PARTICULAR PURPOSE. THE ARCHITECT DOES NOT WARRANT THAT THE INFORMATION WILL BE FREE FROM ERRORS, VIRUSES OR OTHER HARMFUL COMPONENTS. THE ARCHITECT'S DOCUMENTS MAY NOT BE USED FOR ANY PURPOSE NOT AGREED TO IN WRITING BY THE ARCHITECT. THE ARCHITECT'S DOCUMENTS MAY CONTAIN SOME INFORMATION OBTAINED FROM THIRD PARTIES. THE ARCHITECT MAKES NO REPRESENTATIONS AS TO THE ACCURACY OR COMPLETENESS OF INFORMATION PROVIDED BY THIRD PARTIES.

No.	Date	Revision Notes	Zone	Appr

No.	Date	Issue Notes
2	01/3/2024	release for bid
1	12/7/2023	permit subm

Designed By: TBD
Drawn By: Reviewer:
Checked By: Plot: 23/703:culpeper
Reviewed By: Drawing Circle:
Submitted By: CAD File Name:
Project Manager: Plot Date:

Design Firm: NORMAN SMITH ARCHITECTURE
13411 H Street, Washington, DC 20002-4506
3637 State Mills Road, Spernyville, VA 22740
T 202.462.5588 www.normansmitharchitecture.com

Consultant: VALLEY ENGINEERING
4901 Crowe Drive, Mount Crawford, VA 22841
T 540.434.6365 www.valleyesp.com

Project Title: Culpeper County Community Pool Project
163368 Competition Drive
Culpeper, VA

Sheet Title: MECHANICAL SPECIFICATIONS

Scale: NTS

Sheet No.: M000.8
of

SPLIT-SYSTEM AIR HANDLING UNIT SCHEDULE

MARK	MANUF.	MODEL NO.	MAX WEIGHT (LBS)	AREA SERVED	CFM				SUPPLY FAN			EXHAUST FAN			ELECTRICAL			DX COOLING COIL						ELECTRIC HEATING COIL					
					OA	SA	RA	EA	ESP (IN)	RPM	HP	ESP (IN)	RPM	HP	VOLTS / PHASE	UNIT MCA	UNIT MOP	TOTAL MBH	SENSIBLE MBH	COIL EAT (°F)		COIL LAT (°F)		CFM	TOTAL MBH	EAT DB	LAT DB	INPUT KW	FLA
																				DB	WB	DB	WB						
AHU-1	AAON	H3-BRB-8	1100	CLASSROOM WING	1,240	1,240	910	910	0.5	1760	1	0.5	1661	2580	208/3/60	64	80	60.9	40.4	86.8	71.3	55.6	55.4	1240	71.7	41.5	95.1	21	58.3

NOTES:
1. EQUIPMENT SELECTION BASED ON AAON.
2. COOLING IS BASED ON 95°F AIR ENTERING OUTDOOR MOUNTED CONDENSING UNIT.
3. UNIT TO BE PROVIDED W/INTEGRAL BREAKER. UNIT MOUNTED STARTER.
4. HOT GAS REHEAT AND CONTROLS FOR DEHUMIDIFICATION CONTROL.
5. 2" PLEATED PANEL MERV 8 FILTERS.
6. UNIT EER @ OPERATION CONDITIONS: ASHRAE 90.1 COMPLIANT (12.0 EER)
7. ELECTRIC HEATER PROVIDED WITH MODULATING SCR CONTROL.
8. STAINLESS STEEL DRAIN PAN.
9. NOMINAL CASING SIZE: 185"L X 44"W X 23"H
10. UNIT PROVIDED WITH END CONNECTIONS.
11. UNIT DESIGNED TO PROVIDE NEUTRAL (70°F ADJ) SUPPLY AIR.

	ENTHALPY WHEEL							
	OA (°F)		SA (°F)		RA (°F)		EA (°F)	
	DB	WB	DB	WB	DB	WB	DB	WB
SUMMER	95.0	76.0	86.8	71.3	80.0	67.0	92.6	74.7
WINTER	10.0	9.0	40.4	34.4	70.0	53.0	19.4	18.1

ELECTRIC UNIT HEATER SCHEDULE

MARK	DESCRIPTION	TYPE	FAN HP	POWER SUPPLY	CFM	HEAT OUTPUT (KW)	MODEL	NOTES
EUH-1	CEILING MOUNT	HORIZONTAL UNIT HEATER	-	208/3/60	160	1.1	CCI	1-3

NOTES:
1. SELECTION BASED ON INDEECO.
2. PROVIDE WITH INTEGRAL, TAMPERPROOF, BUILT-IN THERMOSTAT.
3. PROVIDE WITH 24-VOLT CONTROL TRANSFORMER.

DUCTLESS WALL MOUNTED AIR HANDLING UNIT SCHEDULE

MARK	SERVICE	MAXIMUM AIRFLOW (CFM)	ESP (IN. WC)	COOLING	HEATING	CONFIGURATION	PHYSICAL				ELECTRICAL		MANUF./MODEL
				NOMINAL (MBH)	NOMINAL (MBH)		WIDTH (IN)	DEPTH (IN)	HEIGHT (IN)	WEIGHT (LB)	POWER SUPPLY	RATED AMPS	
ACH-1	SEE DRAWINGS	254	-	7.0	8.1	WALL MOUNTED DUCTLESS	32-15/16	7-1/2	12-1/8	20	208-230V / 1Ø / 60	0.4	LG / LMN079HVT
ACH-2	SEE DRAWINGS	268	-	9.0	10.9	WALL MOUNTED DUCTLESS	32-15/16	7-1/2	12-1/8	20	208-230V / 1Ø / 60	0.4	LG / LSN090HSV5

NOTES:
1. DESIGN AND PERFORMANCE BASED ON LG, OTHER ACCEPTABLE MANUFACTURERS ARE TRANE.
2. DESIGN BASED ON R410A REFRIGERANT.
3. COOLING PERFORMANCE BASED ON 80°/67°F INDOOR AIR TEMPERATURE AND 95°/75° OUTDOOR AIR TEMPERATURE.
4. HEATING PERFORMANCE BASED ON 70°/60°F INDOOR AIR TEMPERATURE AND 47°/43° OUTDOOR AIR TEMPERATURE.
5. PROVIDE CONDENSATE DRAIN SIZED TO MATCH DRAIN CONNECTION AT EACH AIR HANDLING CASSETTE UNIT, TERMINATE AS SHOWN ON CONSTRUCTION DRAWINGS.
6. MECHANICAL CONTRACTOR TO PROVIDE AND INSTALL INTERNAL CONDENSATE PUMP ON UNIT.
7. PROVIDE EACH "HEAT PUMP ZONE" WITH A HARD WIRED THERMOSTAT.

AIR COOLED CONDENSING UNIT SCHEDULE

MARK	DESCRIPTION	TOTAL CLG (MBH)	CONDENSER ENT. AIR (° FDB)	REFRIGERANT	MIN. NO. REFRIGERANT CIRCUITS	POWER SUPPLY	MCA/MOP	MANUF./MODEL
ACCU-1	AHU-1 COND UNIT	60.9	95	R-410A	1 (2 STAGE)	208V/3Ø/60	20/40	AAON CFA-005

NOTES:
1. SELECTIONS BASED ON AAON.
2. PROVIDE WITH MODULATING HOT GAS RE-HEAT AND CONTROLS FOR DEHUMIDIFICATION.
3. PROVIDE WITH TIME DELAY AND ANTI-SHORT CYCLE TIMER.
4. PROVIDE UNIT POWER PHASE PROTECTION AND SUCTION PRESSURE TRANSDUCER.
5. ECM CONDENSER FAN FOR HEAT PRESSURE CONTROL.
6. CASING TO BE HEAVY GAUGE PAINTED GALVANIZED STEEL.
7. UNIT PROVIDED WITH VARIABLE CAPACITY COMPRESSOR.

AIR COOLED HEAT PUMP SCHEDULE

MARK	DESCRIPTION	COOLING PERFORMANCE			HEATING PERFORMANCE			OPERATING RANGE		REFRIGERANT CIRCUITS (MIN)	POWER SUPPLY	MCA / MOP	MANUF./MODEL
		MIN (MBH)	RATED (MBH)	MAX (MBH)	MIN (MBH)	RATED (MBH)	MAX (MBH)	COOLING (°F DB)	HEATING (°F DB)				
ACHP-1	112 OPEN OFFICE	1.00	9.00	12.60	1.00	10.90	17.10	14 TO 118	-4 TO +65	1	208-230V / 1Ø / 60	11.1 / 15	LG / LSU090HSV5
ACHP-2	110 P&R OFFICE	1.00	9.00	12.60	1.00	10.90	17.10	14 TO 118	-4 TO +65	1	208-230V / 1Ø / 60	11.1 / 15	LG / LSU090HSV5
ACHP-3	115 CLASSROOM	8.40	32.80	38.40	10.08	36.00	41.60	14 TO 118	-4 TO +64	1	208-230V / 1Ø / 60	18.4 / 25	LG / LMU363HV
ACHP-4	117 CONCESSION	8.40	32.80	38.40	10.08	36.00	41.60	14 TO 118	-4 TO +64	1	208-230V / 1Ø / 60	18.4 / 25	LG / LMU363HV
ACHP-5	118 CONCESSION STOR.	1.00	9.00	12.60	1.00	10.90	17.10	14 TO 118	-4 TO +65	1	208-230V / 1Ø / 60	11.1 / 15	LG / LSU090HSV5

NOTES:
1. SELECTIONS BASED ON LG. OTHER ACCEPTABLE MANUFACTURES ARE TRANE.
2. DESIGN BASED ON R410A REFRIGERANT.
3. COOLING PERFORMANCE BASED ON 80°/67°F INDOOR AIR TEMPERATURE AND 95°/75° OUTDOOR AIR TEMPERATURE.
4. HEATING PERFORMANCE BASED ON 70°/60°F INDOOR AIR TEMPERATURE AND 47°/43° OUTDOOR AIR TEMPERATURE.
5. PROVIDE WITH LOW AMBIENT OPERATION DOWN TO 14 °F (COOLING).
6. PROVIDE WITH VARIABLE SPEED COMPRESSOR.
7. PROVIDE WITH TIME DELAY AND ANTI-SHORT CYCLE TIMER.
8. INSTALL UNITS ON RUBBER AND CORK ISOLATION PADS.

ELECTRIC DUCT HEATER SCHEDULE

MARK	LOCATION	CAPACITY	STAGES	DUCT WIDTH (IN)	DUCT HEIGHT (IN)	MINIMUM AIRFLOW (CFM)	POWER SUPPLY (VOLT/PH/HZ)	HEATER FLA.	MODEL
EDH-1	FILTER ROOM	12 KW	2	22	12	880	208/3/60	33.3	IDHE

NOTES:
1. MODEL NUMBERS BASED ON GREENHECK. PROVIDE DUCT HEATERS MANUFACTURED BY GREENHECK OR APPROVED EQUAL.
2. HEATERS TO BE CONSTRUCTED FOR USE IN POOL PUMP ROOM (CHLORINE) ENVIRONMENT.
3. PROVIDE OPEN COIL, ELECTRIC DUCT HEATER.
4. MINIMUM AIRFLOW VALUES BASED ON EXISTING DUCT SIZE LISTED ABOVE AND MAXIMUM EAT= 80ºF.
5. INSTALL PER MANUFACTURER'S INSTRUCTIONS,
6. HEATERS TO BE EITHER SLIP-IN OR FLANGED TYPE.
7. ALL HEATERS TO BE LISTED FOR ZERO CLEARANCE TO COMBUSTIBLE SURFACES AND BEAR UL LABEL,
8. ALL HEATERS SHALL MEET THE REQUIREMENTS OF THE LATEST NATIONAL ELECTRIC CODE.
9. ALL HEATING COILS TO BE MADE OF HIGH GRADE NICKEL/CHROMIUM RESISTANCE WIRE AND TERMINATED BY MEANS OF A LOOP OF WIRE BEING SANDWICHED BETWEEN STAINLESS STEEL OR NICKEL PLATED WASHERS AND TERMINAL HARDWARE. ALL TERMINAL HARDWARE TO BE INSULATED FROM THE HEATER BY A TWO PIECE CERAMIC BUSHING.
10. ELECTRIC HEATER SECTION COMPLETE WITH FUSES AND RESETTABLE HIGH TEMPERATURE LIMIT SWITCH.

COMMONWEALTH OF VIRGINIA
PHILLIP L. GENTRY
Lic. No. 025757
01/03/2024
PROFESSIONAL ENGINEER

PLEASE READ BEFORE OPENING ELECTRONICALLY FILES: PRINTS PROVIDED:
DRAWINGS AND DESIGN IS ORIGINAL WORK OF NORMAN SMITH ARCHITECTURE. THIS DOCUMENT IS TRANSMITTED TO THE RECIPIENT FOR THE PURPOSE OF PRELIMINARY REVIEW, FOR INFORMATION AND COMMENT, IN CONNECTION WITH A PROJECT OF NORMAN SMITH ARCHITECTURE. THIS DOCUMENT IS NOT TO BE USED FOR ANY OTHER PURPOSE OR FOR THE BENEFIT OF ANY OTHER PERSON OR ENTITY WITHOUT THE PRIOR WRITTEN CONSENT OF NORMAN SMITH ARCHITECTURE. THIS DOCUMENT IS LOANED TO THE RECIPIENT FOR PRELIMINARY REVIEW AND IN ITS PRELIMINARY FORM IT MAY CONTAIN ERRORS AND OMISSIONS. THE RECIPIENT ACCEPTS THE DOCUMENT ON THE CONDITION THAT IT WILL BE RETURNED UPON REQUEST TO NORMAN SMITH ARCHITECTURE. THE RECIPIENT AGREES TO REVIEW THE DOCUMENT SOLELY FOR THE PURPOSE OF MAKING COMMENTS ON IT. THE RECIPIENT AGREES NOT TO DISTRIBUTE THE DOCUMENT OR ANY INFORMATION CONTAINED IN THE DOCUMENT TO ANY OTHER PERSON OR ENTITY.
IF THERE EXISTS ANY VIDEO OR VISUAL ASPECT OF THIS PRESENTATION, THE VIDEO IS OFFICIAL AND GOVERNS OVER ANY PRINTED DOCUMENTS. THE PRINTED DOCUMENTS ARE NOT TO BE USED AS A SUBSTITUTE FOR THE VIDEO. THE PRINTED DOCUMENTS ARE PROVIDED FOR REFERENCE ONLY. THE PRINTED DOCUMENTS MAY NOT CONTAIN ALL OF THE INFORMATION PRESENTED IN THE VIDEO. THE PRINTED DOCUMENTS MAY NOT CONTAIN ALL OF THE INFORMATION PRESENTED IN THE VIDEO. THE PRINTED DOCUMENTS MAY NOT CONTAIN ALL OF THE INFORMATION PRESENTED IN THE VIDEO. THE PRINTED DOCUMENTS MAY NOT CONTAIN ALL OF THE INFORMATION PRESENTED IN THE VIDEO.
VERIFY: ALL EXISTING AND FIELD CONDITIONS PRIOR TO CONTRACTING WITH CONTRACTORS. ADDENDA, RFIS, CHANGE ORDERS AND OTHER SPECIFICATIONS. ADDENDA, RFIS, CHANGE ORDERS AND OTHER SPECIFICATIONS MAY NOT BE INCLUDED IN THE PRINTED DOCUMENTS. CONTACT OWNER'S PROJECT MANAGER OF ANY VARIANCE BETWEEN FACTUAL AND DRAWINGS/SPECS.

No.	Date	Issue Notes
2	01/3/2024	release for bid
1	12/7/2023	permit subm

Designed By	TBD
Date	
Drawn By	Revision
Checked By	Project Number 23703.culpeper
Approved By	Drawing Code
Submitted By	CAD File Name
Project Manager	Plot Date

Design Firm
NORMAN SMITH ARCHITECTURE
1341 H Street, Washington, DC 20002-4906
3637 Saint Mills Road, Sperryville, VA 22740
T 202.462.5886 www.normansmitharchitecture.com

Consultant
VALLEY ENGINEERING
4991 Crowe Drive, Mount Crawford, VA 22841
T 540.434.6365 www.valleyesp.com

Project Title
Culpeper County
Community Pool Project
16388 Competition Drive
Culpeper, VA

Sheet Title
MECHANICAL SCHEDULES

Scale
NTS

Sheet No.
M000.9
of

FAN SCHEDULE

MARK	DESCRIPTION	TYPE	HP	POWER SUPPLY	ESP (IN. WC)	CFM	MAX FAN RPM	MAX SONES	MIN FAN DIA. (IN.)	DRIVE ARRANGEMENT	ACCESSORIES A	B	C	D	E	F	G	H	MODEL	NOTES	CONTROL
IF-1	LOCKER ROOM INTAKE	INLINE INTAKE	3/4	208/1/60	0.75	2060	1394	13.9	-	BELT DRIVE				X					BSQ-140	1	ALWAYS ON
EF-1	FILTER ROOM EXHAUST	INLINE EXHAUST	1/6	208/1/60	0.5	850	1140	5.8	-	DIRECT DRIVE				X					SQ-120	1	ALWAYS ON
EF-2	RR/JANITOR CLOSET EXHAUST	INLINE EXHAUST	1/15	208/1/60	0.5	120	1228	1.9	-	DIRECT DRIVE			X	X					CSP-A390-VG	1	OCCUPANCY
EF-4	LOCKER ROOM EXHAUST	INLINE EXHAUST	3/4	208/1/60	0.75	2160	1434	14.3	-	BELT DRIVE				X					BSQ-140	1	OCCUPANCY
HVLS-1	ENTRY AREA	HIGH VOLUME, LOW SPEED	1/10	115/1/60	-	5377	134	-	-	DIRECT DRIVE					X				DC-5-7-MV	4	OCCUPANCY

NOTES:
1. ACCEPTABLE MANUFACTURERS ARE ACME, GREENHECK, AND LOREN COOK. SELECTIONS BASED ON GREENHECK.
2. ACCEPTABLE MANUFACTURERS ARE CAPTIVEAIRE AND GREENHECK. SELECTIONS BASED ON CAPTIVEAIRE.
3. FAN TO BE CASSIFIED FOR USE IN HIGH TEMPERATURE OPERATION (300°F), PROVIDE FAN WITH GREASE BOX AND SLOPED ROOF CURB.
4. WORK ASSOCIATED WITH HVLS-1 FAN SHALL BE PRICED AS AN ADD ALTERNATE.

ACCESSORIES:
A. 120V MOTOR OPERATED DAMPER
B. ROOF CURB, 18-INCH HIGH U.O.N.
C. SPEED CONTROLLER
D. DISCONNECT SWITCH
E. MOTOR OVERLOADS FOR 115V/1Ø FAN MOTORS
F. CURB ADAPTER
G. MOTOR RATED FOR VARIABLE FREQUENCY DRIVE SERVICE
H. WALL CAP

LOUVER SCHEDULE

MARK	LOCATION	APPLICATION	SIZE (IN.) (W X H)	MIN FREE AREA (SF)	CFM	PRESSURE DROP (IN. WG)	FREE AREA VELOCITY (FT./MIN)	MODEL NUMBER	MANUFACTURER	NOTES
IL-1	OAU INTAKE	INTAKE	24" X 22"	1.58	1240	-	785	ESD-403	GREENHECK	1-8
IL-2	DUCTED LOCKER/FAMILY INTAKE	INTAKE	24" X 24"	1.78	2060	-	1157	ESD-403	GREENHECK	1-8
IL-3	FILTER ROOM INTAKE	INTAKE	36" X 15"	1.44	750	-	521	ESD-403	GREENHECK	1-8
RL-1	ERV-1 RELIEF	RELIEF	20" X 18"	0.94	920	-	979	ESD-403	GREENHECK	1-8
EL-1	PUMP ROOM EXHAUST	EXHAUST	18" X 18"	0.83	860	-	1036	ESD-403	GREENHECK	1-8
EL-2	OFFICE RR / JAN CLOSET	EXHAUST	12" X 12"	0.30	120	-	400	ESD-403	GREENHECK	1-8
EL-3	LOCKER EXHAUST	EXHAUST	26" X 26"	2.11	2160	-	1024	ESD-403	GREENHECK	1-8

NOTES:
1. ACCEPTABLE MANUFACTURERS ARE CESCO, RUSKIN, AND GREENHECK SELECTIONS BASED ON GREENHECK.
2. 4" CHANNEL FRAME DEPTH, FRAME THICKNESS 0.081", ALUMINUM CONSTRUCTION.
3. WELDED CONSTRUCTION.
4. FINISH - KYNAR 70% (2 COAT).
5. BIRD SCREEN
6. BIRD SCREEN TYPE - 3/4" X 0.050 FLAT EXPANDED ALUMINUM.
7. INSECT SCREEN.
8. LOUVER COLOR AND FINISH SELECTION BY OWNER.

REGISTER, GRILLE, AND DIFFUSER SCHEDULE

MARK	CFM	P.D. (IN. W.G.)	RUNOUT SIZE (DIA. IN.)	NECK SIZE (IN.)	AIR PATTERN	PANEL SIZE (IN.)	TYPE	MATERIAL	FINISH	ACCESSORIES A	B	C	D	E	F	G	H	MODEL T&B	MODEL PRICE	NOTES
A	50-80	0.06	6	6 x 6	SEE PLANS	24 x 24	LAY-IN SUPPLY	ALUMINUM	WHITE			X						AMSR	AMD	1, 2
B	90-170	0.06	8	9 x 9	SEE PLANS	24 x 24	LAY-IN SUPPLY	ALUMINUM	WHITE			X						AMSR	AMD	1, 2
C	180-280	0.06	AS INDICATED	12 x 12	SEE PLANS	24 x 24	LAY-IN SUPPLY	ALUMINUM	WHITE									AM	AMD	1, 2
D	290-420	0.06	AS INDICATED	15 x 15	SEE PLANS	24 x 24	LAY-IN SUPPLY	ALUMINUM	WHITE									AM	AMD	1, 2
S1	110	0.04	-	6 x 6	DOUBLE DEFL.	-	LAY-IN SUPPLY	ALUMINUM	WHITE				X					A54	620	1, 2, 3
S2	270	0.04		8 x 8	DOUBLE DEFL.	-	LAY-IN SUPPLY	ALUMINUM	WHITE				X					A54	620	1, 2, 3
S3	800	0.02	-	22 x 12	DOUBLE DEFL.	-	SURF MTD SUPPLY	ALUMINUM	WHITE				X					A54	620	1, 2
R1/E1/T1	50-160	0.08	8	8 x 8	PERFORATED	24 x 24	LAY-IN RETURN	ALUMINUM	WHITE			X						APR	APDDR	1, 2
R2/E2/T2	170-250	0.08	AS INDICATED	10 x 10	PERFORATED	24 x 24	LAY-IN RETURN	ALUMINUM	WHITE			X						APR	APDDR	1, 2
R4/E4	360-700	0.06	AS INDICATED	16 x 16	PERFORATED	24 x 24	LAY-IN RETURN	ALUMINUM	WHITE									APR	APDDR	1, 2
R5/E5	710-1590	0.06	AS INDICATED	22 x 22	PERFORATED	24 x 24	LAY-IN RETURN	ALUMINUM	WHITE									APR	APDDR	1, 2
R7/E7/T7	50-150	0.05	8	8 x 8	PERFORATED	-	SURF MTD RETURN	ALUMINUM	WHITE			X						APG	10A	1, 2
R8/E8/T8	160-240	0.05	10	10 x 10	PERFORATED	-	SURF MTD RETURN	ALUMINUM	WHITE			X						APG	10A	1, 2

GENERAL NOTES:
1. SELECTIONS BASED ON PRICE AND TUTTLE & BAILEY.
2. MAXIMUM 30 NC RATING
3. SUPPLY DIFFUSERS WITH REMOVABLE ALUMINUM ADAPTER FILL PANEL FOR LAY-IN MOUNTING.

ACCESSORIES:
A. OPPOSED BLADE DAMPERS (SQUARE/RECT NECK).
B. RADIAL DAMPER (ROUND NECK).
C. SQUARE TO ROUND ADAPTERS (AS REQUIRED).
D. DOUBLE DEFLECTION WITH ADJUSTABLE VANES.
E. ADJUSTABLE AIR PATTERN VANES.
F. PLASTER FRAME.
G. PROVIDE DIFFUSER WITH MULTI-ORIFICED JET INDUCTION AND AIR MIXING DIFFUSING VANES.

DUCT CONSTRUCTION SCHEDULE

SERVICE	LOCATION	DUCT TYPE/ MATERIAL	SINGLE WALL/ DOUBLE WALL	PRESSURE CLASSIFICATION	SMACNA SEAL CLASS.	SMACNA LEAKAGE CLASS. RECTANGULAR	SMACNA LEAKAGE CLASS. ROUND	APPLICABLE CODE/STANDARD
SUPPLY, RETURN, EXHAUST, AND OUTSIDE AIR	CONCEALED ABOVE CEILINGS	GALVANIZED STEEL, RECTANGULAR W/ FLANGED OR SLIP & DRIVE JOINTS, SPIRAL, OR GROOVED LONG. SEAM	SINGLE	2"	B	12	6	NOTES 1, 2, 3, 4
PUMP ROOM OUTSIDE AIR & EXHAUST	EXPOSED	ALUMINUM, RECTANGULAR W/ FLANGED OR SLIP & DRIVE JOINTS, SPIRAL, OR GROOVED LONG. SEAM	SINGLE	2"	B	12	6	NOTES 1, 2, 3, 4
	CONCEALED ABOVE CEILINGS	ALUMINUM, RECTANGULAR W/ FLANGED OR SLIP & DRIVE JOINTS, SPIRAL, OR GROOVED LONG. SEAM	SINGLE	2"	B	12	6	NOTES 1, 2, 3, 4
DRYER EXHAUST	CONCEALED ABOVE CEILINGS OR IN CHASES, OR LOCATED IN MECHANICAL ROOMS	GALVANIZED STEEL, ROUND W/ CRIMP & LAP JOINTS	SINGLE	2"	B	12	6	NOTES 1, 2, 3, 4, 6

NOTES:
1. SMACNA HVAC DUCT CONSTRUCTION STANDARDS - METAL AND FLEXIBLE.
2. NFPA 90A, INSTALLATION OF AIR CONDITIONING AND VENTILATION SYSTEMS.
3. INTERNATIONAL MECHANICAL CODE.
4. LISTED CODES AND STANDARDS SHALL BE CURRENT ACCEPTED EDITION.
5. NOT USED.
6. CRIMP JOINTS SHALL OCCUR IN THE DIRECTION OF AIRFLOW PER VIRGINIA MECHANICAL CODE.
7. NOT USED.
8. NOT USED.

DRAWINGS AND DESIGN © 2023 NORMAN SMITH ARCHITECTURE.
DRAWINGS AND SPECIFICATIONS AND THE IDEAS DESIGNS AND ARRANGEMENTS REPRESENTED THEREIN ARE THE PROPERTY OF THE ARCHITECT AND ARE NOT TO BE USED IN WHOLE OR IN PART FOR ANY PURPOSE OTHER THAN THE PROJECT FOR WHICH THEY WERE PREPARED AND DELIVERED. ANY USE OF THESE DRAWINGS AND SPECIFICATIONS FOR OTHER PROJECTS, ALTERATIONS TO THIS PROJECT, OR COMPLETION OF THIS PROJECT BY OTHERS IS PROHIBITED WITHOUT THE WRITTEN CONSENT OF THE ARCHITECT. THE ARCHITECT WILL CONSIDER GRANTING CONSENT TO USE THE DOCUMENTS FOR ANOTHER PROJECT UPON WRITTEN REQUEST TO THE ARCHITECT AND THE ESTABLISHMENT OF MUTUALLY ACCEPTABLE COMPENSATION.

PLEASE READ BEFORE OPENING ELECTRONIC FILES: NSA HAS ADDED THE FOLLOWING TERMS TO ALL OF OUR PROPOSALS, CONTRACTS, AND EMAIL SIGNATURES: THE ELECTRONIC DOCUMENT YOU ARE OPENING, RECEIVING OR USING ("DOCUMENT") IS PROPERTY OF A MAGNIFICENT THE DESIGNER AND RELATED DISCIPLINES (NSA) PROPRIETARY AND TRADE SECRET INFORMATION. NSA GRANTS YOU A LIMITED, NON-EXCLUSIVE, NON-TRANSFERABLE LICENSE TO VIEW THE DOCUMENT SOLELY FOR THE PURPOSE OF VIEWING THE DESIGN SHOWN IN THE DOCUMENT AND OFFER TO PURCHASE THE DESIGN SHOWN IN THE DOCUMENT. ANY OTHER USE, REPRODUCTION, DISTRIBUTION, OR DISCLOSURE OF THE DOCUMENT WITHOUT NSA'S PRIOR WRITTEN CONSENT IS PROHIBITED. ALL RIGHTS NOT EXPRESSLY GRANTED HEREUNDER ARE RESERVED BY NSA. ELECTRONIC FORMATS HAVE A DIFFERENT LEVEL OF ACCURACY THAN HARD COPY DOCUMENTS. THE INFORMATION HEREIN MAY BE INCOMPLETE OR CONTAIN ERRORS. BY OPENING THE ELECTRONIC DOCUMENT, YOU ACCEPT THE RISK OF ERRORS AND OMISSIONS. IF THERE EXISTS ANY ISSUE WITH THE DOCUMENT YOU ARE NOT WILLING TO ACCEPT, YOU MUST IMMEDIATELY DESTROY ALL ELECTRONIC FILES, OR RETURN THE ELECTRONIC FILES TO NSA. IN THE EVENT YOU ARE ASKED TO SIGN A WRITTEN AGREEMENT REGARDING THE DESIGN, YOU MUST REFER TO THE WRITTEN AGREEMENT FOR ADDITIONAL TERMS AND CONDITIONS REGARDING YOUR USE OF THE DOCUMENT. IF THERE EXISTS ANY ISSUE WITH THE DOCUMENT YOU ARE NOT WILLING TO ACCEPT, YOU MUST IMMEDIATELY DESTROY ALL ELECTRONIC FILES, OR RETURN THE ELECTRONIC FILES TO NSA. IN THE EVENT YOU ARE ASKED TO SIGN A WRITTEN AGREEMENT REGARDING THE DESIGN, YOU MUST REFER TO THE WRITTEN AGREEMENT FOR ADDITIONAL TERMS AND CONDITIONS REGARDING YOUR USE OF THE DOCUMENT. YOU ACKNOWLEDGE THAT YOU ARE ENTITLED TO RELY ONLY UPON THE FINAL, SEALED, WRITTEN DOCUMENTS PROVIDED BY NSA. ANY OTHER DOCUMENTS, INCLUDING BUT NOT LIMITED TO DRAFT DOCUMENTS, ARE PROVIDED FOR REVIEW AND COMMENT ONLY. NSA MAKES NO REPRESENTATIONS OR WARRANTIES AS TO THE ACCURACY OR COMPLETENESS OF ANY DRAFT DOCUMENTS PROVIDED. YOU ACKNOWLEDGE THAT DRAFT DOCUMENTS MAY BE INCOMPLETE OR CONTAIN ERRORS OR OMISSIONS. YOU AGREE THAT YOU WILL NOT RELY ON ANY DRAFT DOCUMENTS. YOU AGREE THAT NSA SHALL HAVE NO LIABILITY TO YOU OR ANY OTHER PERSON OR ENTITY FOR ANY LOSS, DAMAGE, OR OTHER CONSEQUENCE RESULTING FROM OR ARISING OUT OF YOUR USE OF ANY DRAFT DOCUMENTS. YOU AGREE TO RETURN OR DESTROY ALL COPIES OF ANY DRAFT DOCUMENTS UPON REQUEST FROM NSA.

No.	Date	Issue Notes
4	3/29/24	rebid revisions
3	02/19/2024	permit comment response
2	01/3/2024	release for bid
1	12/7/2023	permit subm

Designed By: TBD
Drawn By: Reviewer
Checked By: 23703.culpeper
Reviewed By: Drawing Code
Submitted By: CAD File Name
Project Manager: Plot Date

Design Firm: NORMAN SMITH ARCHITECTURE
1341 H Street, Washington, DC 20002-4906
3637 Slate Mills Road, Spencyville, VA 22740
T 202.462.5886 www.normansmitharchitecture.com

Consultant: VALLEY ENGINEERING
4901 Crowe Drive, Mount Crawford, VA 22841
T 540.434.6365 www.valleyesp.com

Project Title: Culpeper County Community Pool Project
16388 Competition Drive
Culpeper, VA

Sheet Title: MECHANICAL SCHEDULES

Scale: NTS

Sheet No.: M000.10
of

COMMONWEALTH OF VIRGINIA
PHILLIP L. GENTRY
Lic. No. 025757
03/29/2024
PROFESSIONAL ENGINEER

PIPING APPLICATION SCHEDULE

LINE	SYSTEM	PIPE SIZE	PRESSURE RANGE	PIPING APPLICATION						FITTING APPLICATION		
				MATERIAL	ASTM STANDARD	MFG. PROCESS	WEIGHT	JOINT	PRESSURE RATING (PSIG)	MATERIAL	CLASS	JOINT
1	COOLING COIL CONDENSATE DRAIN PIPING	NPS 2" AND SMALLER	-	COPPER	B 88	HARD DRAWN	TYPE L	95-5 LEAD FREE SOLDER	350	WROUGHT COPPER	-	95-5 LEAD FREE SOLDER
2	REFRIGERANT LIQUID AND SUCTION PIPING	NPS 2" AND SMALLER		COPPER	B280	HARD DRAWN	ACR	BRAZED	350	WROUGHT COPPER	-	BRAZED
-	-	-	-	-	-	-	-	-	-	-	-	-

NOTES:
1. USE LONG RADIUS WROUGHT STEEL ELBOWS FOR ALL WELDED STEEL PIPE.
2. GROOVED MECHANICAL JOINT FITTINGS AND COUPLINGS ARE ACCEPTABLE FOR CHILLED WATER PIPING, COUPLINGS SHALL BE VICTAULIC STYLE 07 OR EQUAL BY GRINNELL.
3. MANUFACTURING PROCESS LEGEND: CBW = CONTINUOUS BUTT WELD, ERW = ELECTRIC RESISTANCE WELD.

PIPE INSULATION APPLICATION SCHEDULE

SERVICE	INSULATION TYPE	FINISH & JACKET		PIPE SIZE					
		INDOOR	OUTDOOR	3/4" & BELOW	1" TO 1-1/4"	1-1/2"	2" TO 3"	4" TO 6"	8" & ABOVE
REFRIGERANT PIPING	FIBERGLASS	ASJ-SSL	ASJ-SSL & AJ-SE	1/2"	1/2"	1"	1"	-	-
REFRIGERANT PIPING	FLEXIBLE ELASTOMERIC	-	UPC	1/2"	1/2"	1/2"	1/2"	-	-
CONDENSATE DRAIN PIPING	FIBERGLASS	ASJ-SSL	-	1/2"	1/2"	1/2"	1/2"	-	-

NOTES:
1. PROTECT INDIRECT HUNG PIPING WITH GALVANIZED INSULATION PROTECTION SHIELDS FOR TEMPERATURES 180°F AND BELOW.
2. ALL PIPING SHALL HAVE INSULATION CONTINUOUS THROUGH HANGERS.
3. TIGHTEN ALL HANGER NUTS AFTER INSTALLATION OF INSULATION THROUGH HANGERS.
4. INSULATION IS NOT REQUIRED ON PVC CONDENSATE DRAIN PIPING.
5. FINISH/JACKET LEGEND: ALL SERVICE JACKET WITH SELF-SEALING LAP (ASJ-SSL), ALUMINUM JACKET-STUCCO EMBOSSED (AJ-SE), ULTRAVIOLET PROTECTIVE COATING (UPC).
6. PROVIDE HEAT TRACE ON RTU CONDENSATED TRAP AND PIPING A MINIMUM OF 10' DOWNSTREAM OF THE RTU CONDENSATE CONNECTION.

COMMONWEALTH OF VIRGINIA
PHILLIP L. GENTRY
Lic. No. 025757
03/29/2024
PROFESSIONAL ENGINEER

COPYRIGHT AND TRADE SECRET, ELECTRONIC FILES, AND PRINTS:
DRAWINGS AND SPECIFICATIONS AND THE IDEAS DESIGNS AND ARRANGEMENTS REPRESENTED THEREBY ARE AND REMAIN THE PROPERTY OF THE ARCHITECT AND ENGINEER, WITHOUT EXCEPTION, THE PROPERTY OF THE ARCHITECT AND ENGINEER AND ARE NOT TO BE DISCLOSED TO OTHERS AND NOT TO BE USED, PARTLY OR WHOLLY, WITHOUT THE CONSENT OF, OR PRIOR AND LIKEWISE, IN COMPENSATION WHICH IS ACCEPTABLE TO, THE ARCHITECT AND ENGINEER.
THE ARCHITECT AND ENGINEER RETAIN ALL COMMON LAW, STATUTORY AND OTHER RIGHTS IN THE PROPERTY, INCLUDING THE COPYRIGHTS THEREIN. THE PLANS AND SPECIFICATIONS AND OTHER DOCUMENTS PROVIDED BY THE ARCHITECT AND ENGINEER ARE THE ONLY OFFICIAL VERSIONS OF THE DOCUMENTS. ALTERATIONS TO THE DOCUMENTS PROVIDED BY THE ARCHITECT AND ENGINEER MADE BY OTHERS WITHOUT THE ARCHITECT AND ENGINEER'S PRIOR WRITTEN CONSENT MAY BE CONTRARY TO LAW AND MAY DEVALUE OR DESTROY THE ARCHITECT AND ENGINEER'S INSTRUMENTS OF SERVICE. ANY REUSE OF THE DOCUMENTS WITHOUT WRITTEN VERIFICATION OR ADAPTATION BY THE ARCHITECT AND ENGINEER FOR THE SPECIFIC PURPOSE INTENDED WILL BE AT OWNER'S SOLE RISK AND WITHOUT LIABILITY OR LEGAL EXPOSURE TO THE ARCHITECT AND ENGINEER. OWNER SHALL INDEMNIFY AND HOLD HARMLESS THE ARCHITECT AND ENGINEER AND ALL PERSONS ENGAGED IN THE PREPARATION OF THE DOCUMENTS FROM ALL CLAIMS, DAMAGES, LOSSES, AND EXPENSES, INCLUDING ATTORNEYS' FEES, ARISING OUT OF OR RESULTING THEREFROM.
IF THERE EXISTS ANY CONFLICTS BETWEEN THE DRAWINGS, THE PLANS AND SPECIFICATIONS AND OTHER DOCUMENTS PROVIDED BY THE ARCHITECT AND ENGINEER, THE ARCHITECT AND ENGINEER'S OFFICIAL VERSIONS OF THE DOCUMENTS SHALL GOVERN. THE ARCHITECT AND ENGINEER'S OFFICIAL VERSIONS OF THE DOCUMENTS SHALL GOVERN OVER ANY DOCUMENTS OBTAINED FROM OTHER SOURCES, INCLUDING WITHOUT LIMITATION, ANY DOCUMENTS OBTAINED FROM GOVERNMENTAL AGENCIES OR OTHERS, OR OTHERWISE, THE ARCHITECT AND ENGINEER DISCLAIMS ANY LIABILITY FOR ANY DOCUMENTS OBTAINED FROM OTHER SOURCES.
VERIFY ALL ELEVATIONS, DIMENSIONS, AND CONDITIONS AT THE JOB SITE AND REPORT ANY ERRORS, OMISSIONS, OR CONFLICTS TO THE ARCHITECT AND ENGINEER BEFORE PROCEEDING WITH THE WORK. ANY WORK PERFORMED AFTER DISCOVERY OF ERRORS, OMISSIONS, OR CONFLICTS WITHOUT NOTIFYING THE ARCHITECT AND ENGINEER IS AT THE CONTRACTOR'S SOLE RISK AND EXPENSE. NO ALLOWANCE WILL BE MADE FOR ANY WORK PERFORMED AFTER DISCOVERY OF ERRORS, OMISSIONS, OR CONFLICTS.
DO NOT SCALE DRAWINGS. USE ONLY DIMENSIONS SHOWN. ANY VARIANCE BETWEEN ACTUAL AND DIMENSIONS SHOWN MUST BE REPORTED TO THE ARCHITECT AND ENGINEER IMMEDIATELY FOR ADJUSTMENT.

No.	Date	Issue Notes
2	01/3/2024	release for bid
1	12/7/2023	permit subm

No.	Date	Revision Notes	Zone	Appr
3	3/29/24	rebid revisions		

Designed By: TBD
Date
Drawn By:
Reviewer
Checked By:
Project: 23703.culpeper
Reviewed By:
Drawing Code
Submitted By:
CAD File Name
Project Manager
Plot Date

Design Firm:
NORMAN SMITH ARCHITECTURE
1341 H Street, Washington, DC 20002-4906
3637 State Mills Road, Sperryville, VA 22740
T 202.462.5886 www.normansmitharchitecture.com

Consultant:
VALLEY ENGINEERING
4991 Crowe Drive, Mount Crawford, VA 22841
T 540.434.6365 www.valleyesp.com

Project Title:
Culpeper County
Community Pool Project
163383 Competition Drive
Culpeper, VA

Sheet Title:
MECHANICAL
SCHEDULES

Scale: NTS

Sheet No.:
M000.11
of

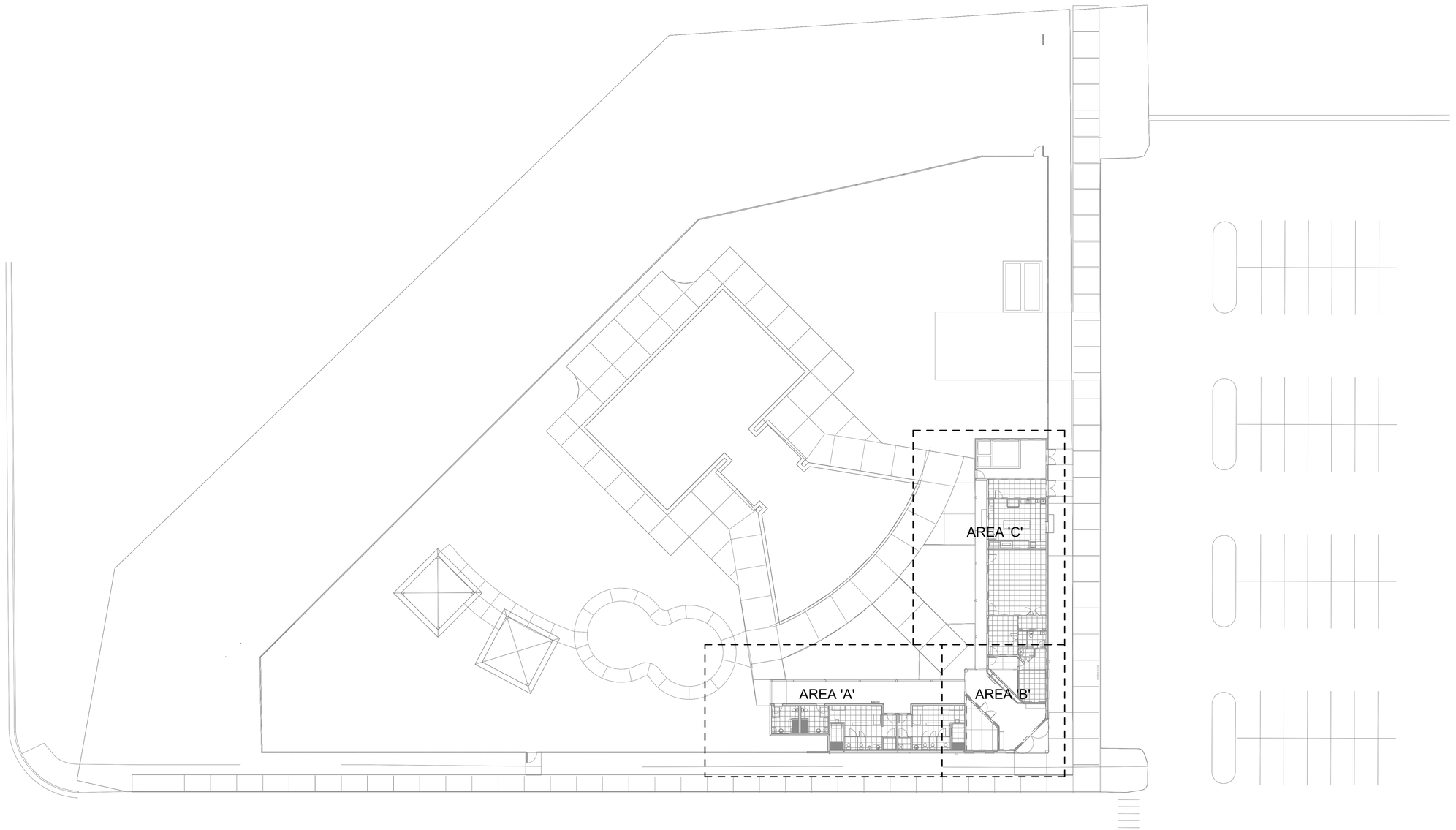

MECHANICAL OVERALL PLAN

SCALE: 1" = 20'-0"

COMMONWEALTH OF VIRGINIA
PHILLIP L. GENTRY
Lic. No. 025757
01/03/2024
PROFESSIONAL ENGINEER

PLEASE READ BEFORE USING ELECTRONIC FILES: READ THIS NOTICE:

DRAWINGS AND DESIGN & SITE WORMAN MFTA ARCHITECTURE, DRAWINGS AND SPECIFICATIONS AND THE IDEAS DESIGNS AND ARRANGEMENTS REPRESENTED THEREBY ARE THE PROPERTY OF THE ARCHITECT AND ARE NOT TO BE USED IN WHOLE OR IN PART FOR ANY PURPOSE OTHER THAN THE PROJECT SHOWN HEREIN WITHOUT THE WRITTEN AUTHORIZATION OF THE ARCHITECT. THE ARCHITECT HAS PRODUCED THESE DRAWINGS IN ELECTRONIC FORMAT AS A CONVENIENCE TO THE OWNER AND CONTRACT BIDDER PARTIES, IT IS ANTICIPATED THAT THEY WILL BE FURTHER MODIFIED BY THE CONTRACT BIDDER PARTIES TO ADD DETAILS, NOTES, ETC. THE ARCHITECT MAKES NO REPRESENTATION AS TO THE ACCURACY OF THE ELECTRONIC DRAWINGS AFTER THEY HAVE BEEN MODIFIED BY THE OWNER OR CONTRACTOR PARTIES. VERIFY THAT THEY ARE USING ALL OF THE CORRECT AND CURRENT DRAWINGS AND SPECIFICATIONS. THE ARCHITECT ASSUMES NO RESPONSIBILITY FOR DRAWINGS AND SPECIFICATIONS NOT BEARING THE ORIGINAL SIGNATURE OF THE ARCHITECT. VERIFY ALL ELEVATIONS AND FIELD CONDITIONS PRIOR TO CONTRACTING WITH THE SUBCONTRACTORS. ADDENDA, RFIS, CHANGE ORDERS AND OTHER SUPPLEMENTAL DOCUMENTS MAY NOT BE REPRODUCED ON THE ARCHITECT'S WEBSITE. VERIFY WITH THE ARCHITECT OR OWNER'S PROJECT MANAGER OF ANY VARIANCE BETWEEN PICTURE AND DRAWING DESCRIPTION.

IF THREE-D CAD IS USED TO GENERATE PORTIONS OF THE DESIGN, THE CONTRACTOR AGREES TO PROVIDE THE OWNER AND ARCHITECT WITH THE ORIGINAL CAD FILES UPON REQUEST. THE CONTRACTOR AGREES TO ACCEPT THE ARCHITECT'S OWNERSHIP OF THE CAD FILES AS THE ARCHITECT'S INSTRUMENTS OF SERVICE. THE CONTRACTOR AGREES TO ACCEPT THE ARCHITECT'S OWNERSHIP OF THE CAD FILES AS THE ARCHITECT'S INSTRUMENTS OF SERVICE. THE CONTRACTOR AGREES TO ACCEPT THE ARCHITECT'S OWNERSHIP OF THE CAD FILES AS THE ARCHITECT'S INSTRUMENTS OF SERVICE. THE CONTRACTOR AGREES TO ACCEPT THE ARCHITECT'S OWNERSHIP OF THE CAD FILES AS THE ARCHITECT'S INSTRUMENTS OF SERVICE.

No.	Date	Revision Notes	Zone	Appr

No.	Date	Issue Notes
2	01/3/2024	release for bid
1	12/7/2023	permit subm

Designed By
Drawn By
Checked By
Reviewed By
Submitted By
Project Manager
Date TBD
Reason
Project 23703:culpeper
Drawing Code
CAD File Name
Plot Date

Design Firm
NORMAN SMITH ARCHITECTURE
13411 H Street, Washington, DC 20002-4906
3637 Slate Mills Road, Spenyville, VA 22740
T 202.462.5686 www.normansmitharchitecture.com

Consultant
VALLEY ENGINEERING
4901 Crowe Drive, Mount Crawford, VA 22841
T 540.434.6385 www.valleyesp.com

Project Title
Culpeper County
Community Pool Project
16388 Competition Drive
Culpeper, VA

Sheet Title
MECHANICAL OVERALL PLAN

Scale
1" = 20'-0"

Sheet No.
M100.0
of

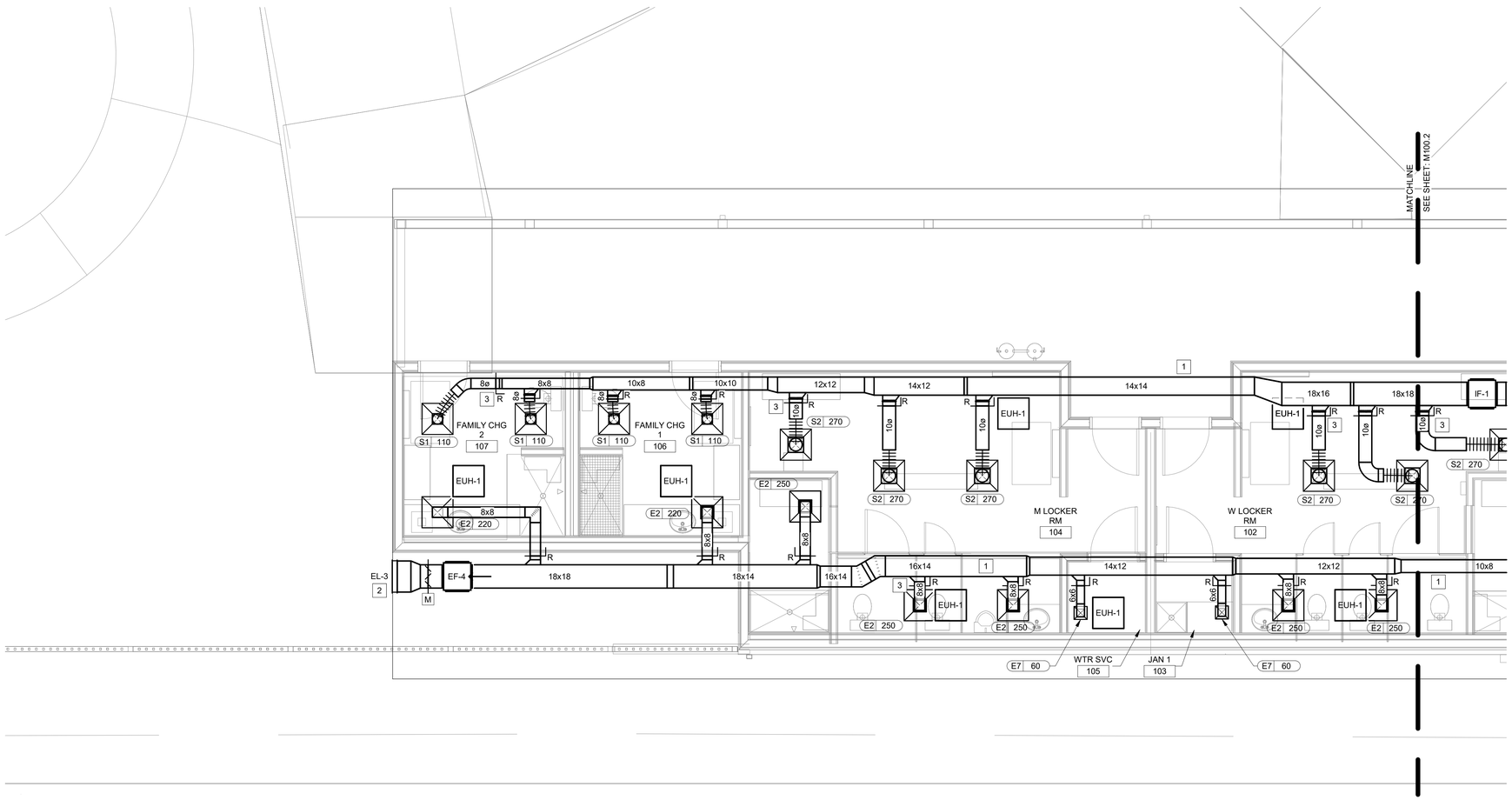

MECHANICAL DUCTWORK PLAN - AREA 'A'

SCALE: 1/4" = 1'-0"

GENERAL NOTES

1. DIMENSIONS AND DUCT/EQUIPMENT SIZES INDICATED ON THE DRAWING MAY NOT REFLECT ACTUAL FIELD CONDITIONS IN ALL LOCATIONS. FIELD VERIFY DUCT, FITTING AND EQUIPMENT SIZES AND LOCATIONS PRIOR TO FABRICATION DUCTWORK SUCH THAT DUCTWORK AND EQUIPMENT WILL FIT IN
2. PROVIDE VOLUME DAMPERS AT ALL SUPPLY, RETURN AND EXHAUST GRILLES.
3. THE DRAWINGS ILLUSTRATE GENERAL SCOPE AND ARRANGEMENT OF MECHANICAL SYSTEMS. THEY SHALL BE FOLLOWED AS CLOSELY AS ACTUAL CONDITIONS ALLOW. MECHANICAL CONTRACTOR SHALL PROVIDE FITTINGS AND OFFSETS IN DUCTWORK AND PIPING TO AVOID FIELD INTERFERENCES.
4. ALL WORK SHALL CONFORM TO THE REGULATIONS OF APPLICABLE FEDERAL, STATE, LOCAL LAWS, ORDINANCES AND CODES. MECHANICAL WORK SHALL BE IN ACCORDANCE WITH THE LATEST ADOPTED EDITION OF THE INTERNATIONAL MECHANICAL CODE AND ANY APPROVED SUPPLEMENTS TO THAT CODE
5. UNLESS OTHERWISE SPECIFIED, ALL DIMENSIONS SHOWN ARE INSIDE CLEAR DIMENSIONS FOR DUCTWORK.
6. ELECTRICAL DATA SHOWN HERE IS THAT PUBLISHED BY THE MANUFACTURER.
7. INSTALL ALL EQUIPMENT MATERIAL AND ACCESSORY DEVICES PER MANUFACTURERS INSTRUCTIONS UNLESS OTHERWISE DIRECTED BY THE OWNER/ENGINEER. ENSURE MAINTENANCE ACCESS IS PROVIDED.

☐ CONSTRUCTION NOTES

1 ALL HORIZONTAL DUCT MAINS AND BRANCHES ARE ROUTED WITHIN THE ATTIC SPACE OF THE BUILDING (UNO).

2 MOUNT LOUVER IN GABLE END OF TRUSSED ROOF.

3 MOUNT MANUAL DAMPER REMOTE ACTUATOR IN AN ACCESSIBLE LOCATION ABOVE THE ACT GRID (TYPICAL ALL).

SUPPLY DIFFUSER KEY

AIR PATTERN (1, 2, 3, OR 4-WAY) — CFM

DIFFUSER MARK

A2 | 200

NOTE: SEE DIFFUSERS ON PLANS FOR DIRECTION OF AIR PATTERN

DRAWINGS AND DESIGN © 2023 NORMAN SMITH ARCHITECTURE.
DRAWINGS AND SPECIFICATIONS AND THE IDEAS DESIGNS AND ARRANGEMENTS REPRESENTED THEREIN ARE THE EXCLUSIVE PROPERTY OF THE ARCHITECT AND REMAIN, WITHOUT EXCEPTION, THE PROPERTY OF THE ARCHITECT AND MAY NOT BE USED FOR ANY PURPOSE NOT SPECIFICALLY AGREED TO IN CONTRACT BETWEEN PLAINTIFF AND ARCHITECT.
DRAWINGS AND SPECIFICATIONS MAY NOT BE REPRODUCED OR ALTERED WITHOUT THE EXPRESS WRITTEN CONSENT OF THE ARCHITECT.

PLEASE READ BEFORE OPENING ELECTRONIC FILES: NORM PACKARD

DRAWINGS AND SPECIFICATIONS ARE INSTRUMENTS OF SERVICE THROUGH WHICH THE ARCHITECT DISCLOSES HIS OPINION OF HOW THE PROJECT MAY BE CONSTRUCTED TO ACHIEVE THE OWNER'S OBJECTIVES. THE DRAWINGS AND SPECIFICATIONS ARE THE PROPERTY OF THE ARCHITECT AND THE ARCHITECT RETAINS ALL COMMON LAW, STATUTORY AND OTHER RESERVED RIGHTS, INCLUDING COPYRIGHT. THE ARCHITECT GRANTS TO THE OWNER A NON-EXCLUSIVE LICENSE TO USE THE DRAWINGS AND SPECIFICATIONS IN CONNECTION WITH THE PROJECT, SUBJECT TO THE FOLLOWING LIMITATIONS: (1) THE ARCHITECT RETAINS ALL OF HIS RIGHTS UNDER THE COPYRIGHT LAW OF THE UNITED STATES OF AMERICA; (2) THE OWNER MAY MAKE ONE REPRODUCTION OF THE DRAWINGS AND SPECIFICATIONS FOR EACH SET OF PROJECT RECORDS; (3) THE OWNER MAY USE THE DRAWINGS AND SPECIFICATIONS TO OBTAIN BUILDING PERMITS AND APPROVALS; (4) THE OWNER MAY USE THE DRAWINGS AND SPECIFICATIONS TO CONSTRUCT, MAINTAIN, REPAIR AND ALTER THE PROJECT; (5) THE OWNER MAY NOT USE THE DRAWINGS AND SPECIFICATIONS FOR ANY PURPOSE NOT RELATED TO THE PROJECT WITHOUT THE ARCHITECT'S PRIOR WRITTEN CONSENT; (6) THE OWNER MAY NOT REMOVE OR ALTER ANY COPYRIGHT MANAGEMENT INFORMATION; (7) THE OWNER MAY NOT DISTRIBUTE THE DRAWINGS AND SPECIFICATIONS TO THIRD PARTIES; (8) THE OWNER MAY NOT SELL, LICENSE, OR OTHERWISE DISTRIBUTE THE DRAWINGS AND SPECIFICATIONS TO THIRD PARTIES; (9) THE OWNER MAY NOT USE THE DRAWINGS AND SPECIFICATIONS FOR ANY PROJECT OTHER THAN THE PROJECT; (10) THE OWNER MAY NOT USE THE DRAWINGS AND SPECIFICATIONS IF THE OWNER FAILS TO PAY THE ARCHITECT THE FEES DUE UNDER THE CONTRACT; (11) THE OWNER MAY NOT USE THE DRAWINGS AND SPECIFICATIONS IF THE OWNER FAILS TO CORRECT ANY DEFICIENCIES IN THE PROJECT DOCUMENTS PROVIDED BY THE ARCHITECT WITHIN A REASONABLE TIME AFTER RECEIVING WRITTEN NOTICE FROM THE ARCHITECT; (12) THE OWNER MAY NOT USE THE DRAWINGS AND SPECIFICATIONS IF THE OWNER FAILS TO MAINTAIN THE PROJECT IN GOOD CONDITION; (13) THE OWNER MAY NOT USE THE DRAWINGS AND SPECIFICATIONS IF THE OWNER FAILS TO MAINTAIN PROFESSIONAL LIABILITY INSURANCE; (14) THE OWNER MAY NOT USE THE DRAWINGS AND SPECIFICATIONS IF THE OWNER FAILS TO MAINTAIN WORKERS' COMPENSATION INSURANCE; (15) THE OWNER MAY NOT USE THE DRAWINGS AND SPECIFICATIONS IF THE OWNER FAILS TO MAINTAIN COMMERCIAL GENERAL LIABILITY INSURANCE; (16) THE OWNER MAY NOT USE THE DRAWINGS AND SPECIFICATIONS IF THE OWNER FAILS TO MAINTAIN PROPERTY INSURANCE; (17) THE OWNER MAY NOT USE THE DRAWINGS AND SPECIFICATIONS IF THE OWNER FAILS TO MAINTAIN EQUIPMENT INSURANCE; (18) THE OWNER MAY NOT USE THE DRAWINGS AND SPECIFICATIONS IF THE OWNER FAILS TO MAINTAIN ANY OTHER INSURANCE REQUIRED BY THE CONTRACT; (19) THE OWNER MAY NOT USE THE DRAWINGS AND SPECIFICATIONS IF THE OWNER FAILS TO PAY THE ARCHITECT'S REASONABLE ATTORNEYS' FEES AND OTHER EXPENSES INCURRED IN ENFORCING THE ARCHITECT'S RIGHTS HEREUNDER; (20) THE OWNER MAY NOT USE THE DRAWINGS AND SPECIFICATIONS IF THE OWNER FAILS TO PAY THE ARCHITECT'S FEES DUE UNDER THE CONTRACT WITHIN 30 DAYS AFTER RECEIPT OF WRITTEN NOTICE FROM THE ARCHITECT THAT PAYMENT IS OVERDUE; AND (21) THE OWNER MAY NOT USE THE DRAWINGS AND SPECIFICATIONS IF THE OWNER FAILS TO PAY THE ARCHITECT'S FEES DUE UNDER THE CONTRACT WITHIN 30 DAYS AFTER RECEIPT OF WRITTEN NOTICE FROM THE ARCHITECT THAT PAYMENT IS OVERDUE. UPON EXECUTION OF THE AGREEMENT BETWEEN THE OWNER AND ARCHITECT, THE ARCHITECT WILL GRANT THE OWNER A NON-EXCLUSIVE LICENSE TO USE THE DRAWINGS AND SPECIFICATIONS IN CONNECTION WITH THE OWNER'S PROJECT, SUBJECT TO THE FOLLOWING LIMITATIONS: (1) THE OWNER MAY MAKE ONE REPRODUCTION OF THE DRAWINGS AND SPECIFICATIONS FOR EACH SET OF PROJECT RECORDS; (2) THE OWNER MAY USE THE DRAWINGS AND SPECIFICATIONS TO OBTAIN BUILDING PERMITS AND APPROVALS; (3) THE OWNER MAY USE THE DRAWINGS AND SPECIFICATIONS TO CONSTRUCT, MAINTAIN, REPAIR AND ALTER THE PROJECT; (4) THE OWNER MAY NOT REMOVE OR ALTER ANY COPYRIGHT MANAGEMENT INFORMATION; (5) THE OWNER MAY NOT DISTRIBUTE THE DRAWINGS AND SPECIFICATIONS TO THIRD PARTIES; (6) THE OWNER MAY NOT SELL, LICENSE, OR OTHERWISE DISTRIBUTE THE DRAWINGS AND SPECIFICATIONS TO THIRD PARTIES; (7) THE OWNER MAY NOT USE THE DRAWINGS AND SPECIFICATIONS FOR ANY PROJECT OTHER THAN THE PROJECT; (8) THE OWNER MAY NOT USE THE DRAWINGS AND SPECIFICATIONS IF THE OWNER FAILS TO MAINTAIN THE PROJECT IN GOOD CONDITION; (9) THE OWNER MAY NOT USE THE DRAWINGS AND SPECIFICATIONS IF THE OWNER FAILS TO MAINTAIN PROFESSIONAL LIABILITY INSURANCE; (10) THE OWNER MAY NOT USE THE DRAWINGS AND SPECIFICATIONS IF THE OWNER FAILS TO MAINTAIN WORKERS' COMPENSATION INSURANCE; (11) THE OWNER MAY NOT USE THE DRAWINGS AND SPECIFICATIONS IF THE OWNER FAILS TO MAINTAIN COMMERCIAL GENERAL LIABILITY INSURANCE; (12) THE OWNER MAY NOT USE THE DRAWINGS AND SPECIFICATIONS IF THE OWNER FAILS TO MAINTAIN PROPERTY INSURANCE; (13) THE OWNER MAY NOT USE THE DRAWINGS AND SPECIFICATIONS IF THE OWNER FAILS TO MAINTAIN EQUIPMENT INSURANCE; (14) THE OWNER MAY NOT USE THE DRAWINGS AND SPECIFICATIONS IF THE OWNER FAILS TO MAINTAIN ANY OTHER INSURANCE REQUIRED BY THE CONTRACT; (15) THE OWNER MAY NOT USE THE DRAWINGS AND SPECIFICATIONS IF THE OWNER FAILS TO PAY THE ARCHITECT'S REASONABLE ATTORNEYS' FEES AND OTHER EXPENSES INCURRED IN ENFORCING THE ARCHITECT'S RIGHTS HEREUNDER; (16) THE OWNER MAY NOT USE THE DRAWINGS AND SPECIFICATIONS IF THE OWNER FAILS TO PAY THE ARCHITECT'S FEES DUE UNDER THE CONTRACT WITHIN 30 DAYS AFTER RECEIPT OF WRITTEN NOTICE FROM THE ARCHITECT THAT PAYMENT IS OVERDUE.

No.	Date	Issue Notes
2	01/3/2024	release for bid
1	12/7/2023	permit subm

No.	Date	Revision Notes	Zone	Appr

Designed By: | Date: TBD
Drawn By: | Revision:
Checked By: | Plot: 23/7/03:culpeper
Reviewed By: | Drawing Code:
Submitted By: | CAD File Name:
Project Manager | Plot Date

Design Firm
NORMAN SMITH ARCHITECTURE
13414 H Street, Washington, DC 20002-4506
3637 Slate Mills Road, Spernyville, VA 22740
T 202.462.5686 www.normansmitharchitecture.com

Consultant
VALLEY ENGINEERING
4901 Crowe Drive, Mount Crawford, VA 22841
T 540.434.6365 www.valleyesp.com

Project Title: Culpeper County Community Pool Project
16388 Competition Drive
Culpeper, VA

Sheet Title: MECHANICAL DUCTWORK PLAN - AREA 'A'

Scale: 1/4" = 1'-0"

Sheet No. M100.1

of

COMMONWEALTH OF VIRGINIA
PHILLIP L. GENTRY
Lic. No. 025757
01/03/2024
PROFESSIONAL ENGINEER

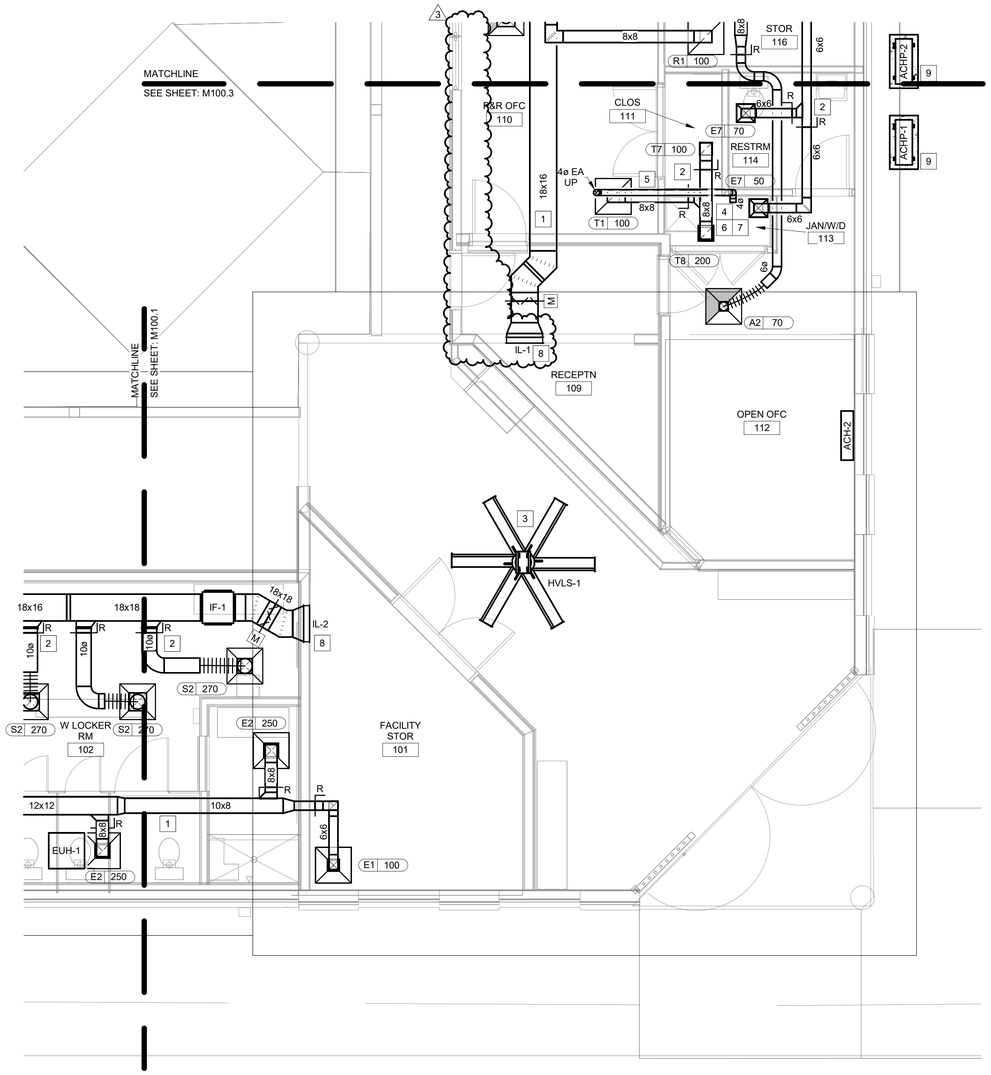

MECHANICAL DUCTWORK PLAN - AREA 'B'

SCALE: 1/4" = 1'-0"

GENERAL NOTES

1. DIMENSIONS AND DUCT/EQUIPMENT SIZES INDICATED ON THE DRAWING MAY NOT REFLECT ACTUAL FIELD CONDITIONS IN ALL LOCATIONS. FIELD VERIFY DUCT, FITTING AND EQUIPMENT SIZES AND LOCATIONS PRIOR TO FABRICATION DUCTWORK SUCH THAT DUCTWORK AND EQUIPMENT WILL FIT IN
2. PROVIDE VOLUME DAMPERS AT ALL SUPPLY, RETURN AND EXHAUST GRILLES.
3. THE DRAWINGS ILLUSTRATE GENERAL SCOPE AND ARRANGEMENT OF MECHANICAL SYSTEMS. THEY SHALL BE FOLLOWED AS CLOSELY AS ACTUAL CONDITIONS ALLOW. MECHANICAL CONTRACTOR SHALL PROVIDE FITTINGS AND OFFSETS IN DUCTWORK AND PIPING TO AVOID FIELD INTERFERENCES.
4. ALL WORK SHALL CONFORM TO THE REGULATIONS OF APPLICABLE FEDERAL, STATE, LOCAL LAWS, ORDINANCES AND CODES. MECHANICAL WORK SHALL BE IN ACCORDANCE WITH THE LATEST ADOPTED EDITION OF THE INTERNATIONAL MECHANICAL CODE AND ANY APPROVED SUPPLEMENTS TO THAT CODE
5. UNLESS OTHERWISE SPECIFIED, ALL DIMENSIONS SHOWN ARE INSIDE CLEAR DIMENSIONS FOR DUCTWORK.
6. ELECTRICAL DATA SHOWN HERE IS THAT PUBLISHED BY THE MANUFACTURER.
7. INSTALL ALL EQUIPMENT MATERIAL AND ACCESSORY DEVICES PER MANUFACTURERS INSTRUCTIONS UNLESS OTHERWISE DIRECTED BY THE OWNER/ENGINEER. ENSURE MAINTENANCE ACCESS IS PROVIDED.

☐ CONSTRUCTION NOTES

1 ALL HORIZONTAL DUCT MAINS AND BRANCHES ARE ROUTED WITHIN THE ATTIC SPACE OF THE BUILDING (UNO).

2 MOUNT MANUAL DAMPER REMOTE ACTUATOR IN AN ACCESSIBLE LOCATION ABOVE THE ACT GRID (TYPICAL ALL).

3 WORK ASSOCIATED WITH THE HIGH VOLUME, LOW SPEED ENTRY FAN (HVLS-1) SHALL BE PRICED AS AN ADD ALTERNATE.

4 ROUTE 4" DRYER EXHAUST DUCT RISER IN BACK WALL OF JAN / W/D 113. DUCT CAN BE TRANSITIONED TO 5 X 3 OR 4.5 X 3.5 OVAL IF NEEDED TO FIT WITHIN THE WALL CAVITY. TRANSITION BACK TO 4" ROUND WITHIN THE ATTIC SPACE. TRANSVERSE DUCT ACROSS ATTIC TO TERMINATE ABOVE WEST SIDE OF THE SLOPED ROOF AT A DRYER VENT BACKDRAFT DAMPER PER DETAIL.

5 SECTION 504.8.4 OF THE 2018 VIRGINIA MECHANICAL CODE DICTATES THAT THE 'EQUIVALENT DRYER EXHAUST DUCT LENGTH' CANNOT BE GREATER THAN 35 FEET. LONGER DUCT LENGTHS CAN BE USED IF PERMITTED IN THE DRYER INSTALLATION OPERATION MANUAL. MAXIMUM ALLOWED 'EQUIVALENT DRYER EXHAUST DUCT LENGTH' FOR THIS PROJECT IS 50 FEET.

6 A PERMANENT PLACARD MUST BE INSTALLED WITHIN 6 FEET OF THE DRYER EXHAUST DUCT CONNECTION. THIS PLACARD MUST DENOTE THE INSTALLED 'EQUIVALENT DRYER EXHAUST DUCT LENGTH' AS CALCULATED PER TABLE 504.8.4.1 OF THE 2018 VIRGINIA MECHANICAL CODE OR THE DRYER MANUFACTURERS IOM.

7 DRYER SELECTIONS MUST BE USED THAT SPECIFICALLY STATE THEY CAN OPERATE WITH 'EQUIVALENT DRYER EXHAUST DUCT LENGTH' GREATER THAN OR EQUAL TO THE INSTALLED 'EQUIVALENT DRYER EXHAUST DUCT LENGTH' ON THE PLACARD NOTED ABOVE.

8 MOUNT INTAKE LOUVER APPROXIMATLEY 12' A.F.F. 3

9 CONCRETE EQUIPMENT PAD BY MECHANICAL CONTRACTOR. PAD SHALL BE 3.5" THICK WITH 4"X4" WWM REINFORCEMENT.

SUPPLY DIFFUSER KEY

AIR PATTERN (1, 2, 3, OR 4-WAY) — CFM

DIFFUSER MARK

A2 | 200

NOTE: SEE DIFFUSERS ON PLANS FOR DIRECTION OF AIR PATTERN

COMMONWEALTH OF VIRGINIA
PHILLIP L. GENTRY
Lic. No. 025757
03/29/2024
PROFESSIONAL ENGINEER

No.	Date	Issue Notes
2	01/3/2024	release for bid
1	12/7/2023	permit subm

No.	Date	Revision Notes	Zone	Appr
3	3/29/24	rebid revisions		

Date: TBD
Scale: 1/4" = 1'-0"
Sheet No.: M100.2 of

Project Title: Culpeper County Community Pool Project 163368 Competition Drive Culpeper, VA

Sheet Title: MECHANICAL DUCTWORK PLAN - AREA 'B'

Design Firm: NORMAN SMITH ARCHITECTURE 13414 H Street, Washington, DC 20002-4506 3637 Slate Mills Road, Spernyville, VA 22740 T 202.462.5588 www.normansmitharchitecture.com

Consultant: VALLEY ENGINEERING 4901 Crove Drive, Mount Crawford, VA 22841 T 540.434.6365 www.valleyesp.com

Designed By / Drawn By / Checked By / Reviewed By / Submitted By / Project Manager / Release / Plot Date: 23/7/3:culpeper / Drawing Code / CAD File Name / Plot Date

PLEASE READ BEFORE OPENING ELECTRONIC FILES: READ THIS NOTICE.
DRAWINGS AND DESIGNS ARE ELECTRONICALLY PRODUCED. THE ORIGINAL DRAWINGS AND DESIGNS ARE THE PROPERTY OF THE ARCHITECT AND ENGINEER. THE DRAWINGS AND DESIGNS ARE INTENDED SPECIFICALLY FOR THIS PROJECT. THE PROPERTY OF A PARTICULAR PARTY. THE DRAWINGS AND DESIGNS ARE NOT INTENDED FOR USE ON OTHER PROJECTS, FOR THE COMPLETION OF THIS PROJECT BY OTHERS IF THE ARCHITECT AND ENGINEER ARE NOT THE PARTIES RETAINED TO COMPLETE THE PROJECT, OR FOR ADDITIONS TO THIS PROJECT BY OTHERS IF THE ARCHITECT AND ENGINEER ARE NOT THE PARTIES RETAINED TO PERFORM THE ADDITIONS. ANY REPRODUCTION OR REUSE OF THE DRAWINGS AND DESIGNS WITHOUT WRITTEN CONSENT OF THE ARCHITECT AND ENGINEER IS PROHIBITED AND ANY SUCH REPRODUCTION OR REUSE WITHOUT WRITTEN CONSENT IS AT THE RECIPIENT'S SOLE RISK AND WITHOUT LIABILITY OR LEGAL EXPOSURE TO THE ARCHITECT AND ENGINEER.
IF THERE EXISTS ANY CONFLICT BETWEEN THE ORIGINAL DRAWINGS AND DESIGNS AS ISSUED BY THE ARCHITECT AND ENGINEER AND ANY COPY OF THE DRAWINGS AND DESIGNS RECEIVED BY THE RECIPIENT, THE ORIGINAL DRAWINGS AND DESIGNS ISSUED BY THE ARCHITECT AND ENGINEER SHALL GOVERN. THE RECIPIENT IS RESPONSIBLE FOR ANY AND ALL CHANGES MADE TO THE DRAWINGS AND DESIGNS AFTER THEY HAVE LEFT THE OFFICE OF THE ARCHITECT AND ENGINEER. THE RECIPIENT IS RESPONSIBLE FOR ANY AND ALL CHANGES MADE TO THE DRAWINGS AND DESIGNS AFTER THEY HAVE LEFT THE OFFICE OF THE ARCHITECT AND ENGINEER. THE RECIPIENT IS RESPONSIBLE FOR ANY AND ALL CHANGES MADE TO THE DRAWINGS AND DESIGNS AFTER THEY HAVE LEFT THE OFFICE OF THE ARCHITECT AND ENGINEER. THE RECIPIENT IS RESPONSIBLE FOR ANY AND ALL CHANGES MADE TO THE DRAWINGS AND DESIGNS AFTER THEY HAVE LEFT THE OFFICE OF THE ARCHITECT AND ENGINEER.
VERIFY ALL EXISTING AND FIELD CONDITIONS PRIOR TO CONTRACTING WITH OWNER'S PROJECT MANAGER OF ANY VARIANCE BETWEEN FACTUAL AND DRAWINGS/DESIGNS.

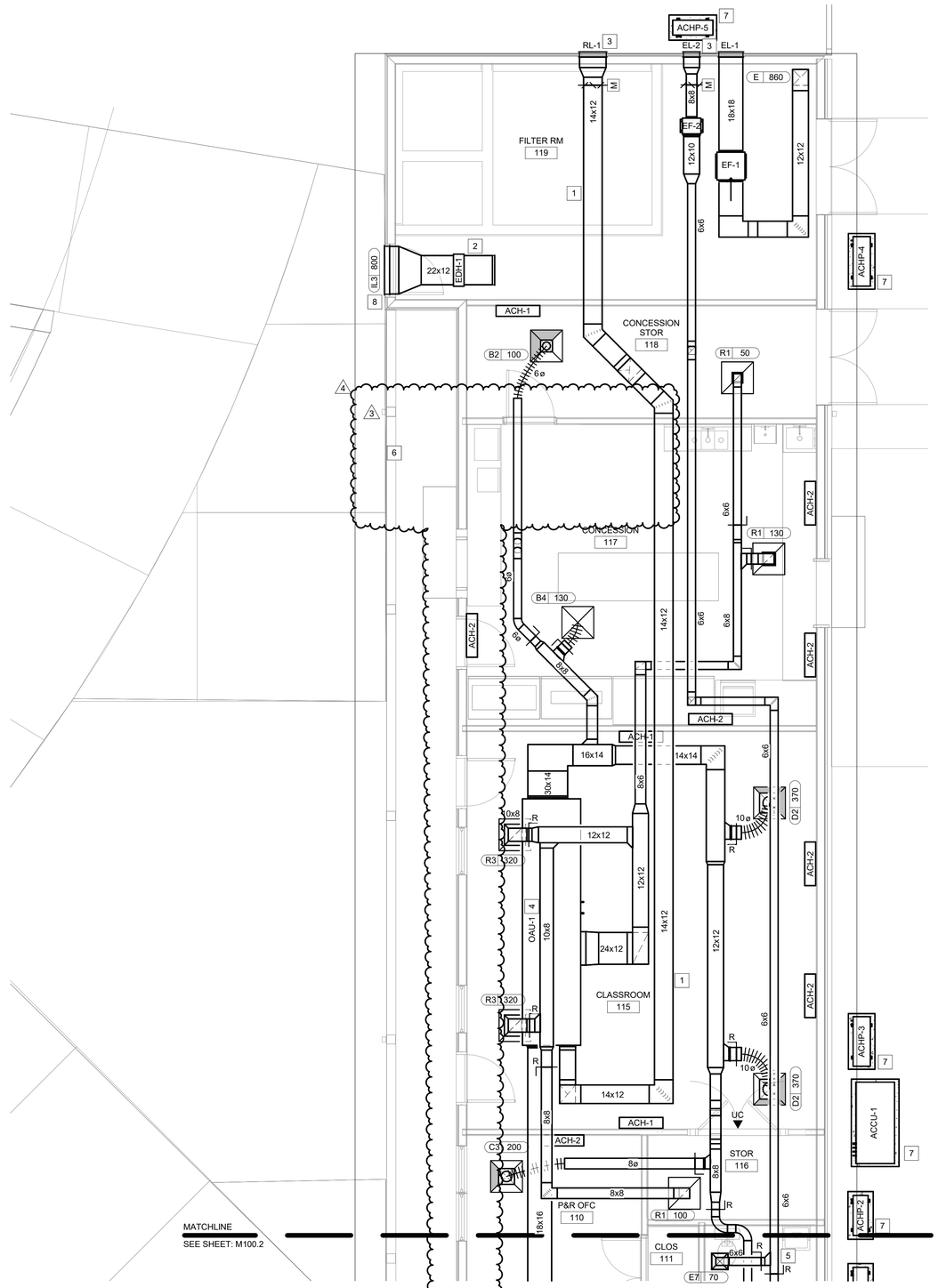

MECHANICAL DUCTWORK PLAN - AREA 'C'

SCALE: 1/4" = 1'-0"

GENERAL NOTES

1. DIMENSIONS AND DUCT/EQUIPMENT SIZES INDICATED ON THE DRAWING MAY NOT REFLECT ACTUAL FIELD CONDITIONS IN ALL LOCATIONS. FIELD VERIFY DUCT, FITTING AND EQUIPMENT SIZES AND LOCATIONS PRIOR TO FABRICATION DUCTWORK SUCH THAT DUCTWORK AND EQUIPMENT WILL FIT IN
2. PROVIDE VOLUME DAMPERS AT ALL SUPPLY, RETURN AND EXHAUST GRILLES.
3. THE DRAWINGS ILLUSTRATE GENERAL SCOPE AND ARRANGEMENT OF MECHANICAL SYSTEMS. THEY SHALL BE FOLLOWED AS CLOSELY AS ACTUAL CONDITIONS ALLOW. MECHANICAL CONTRACTOR SHALL PROVIDE FITTINGS AND OFFSETS IN DUCTWORK AND PIPING TO AVOID FIELD INTERFERENCES.
4. ALL WORK SHALL CONFORM TO THE REGULATIONS OF APPLICABLE FEDERAL, STATE, LOCAL LAWS, ORDINANCES AND CODES. MECHANICAL WORK SHALL BE IN ACCORDANCE WITH THE LATEST ADOPTED EDITION OF THE INTERNATIONAL MECHANICAL CODE AND ANY APPROVED SUPPLEMENTS TO THAT CODE
5. UNLESS OTHERWISE SPECIFIED, ALL DIMENSIONS SHOWN ARE INSIDE CLEAR DIMENSIONS FOR DUCTWORK.
6. ELECTRICAL DATA SHOWN HERE IS THAT PUBLISHED BY THE MANUFACTURER.
7. INSTALL ALL EQUIPMENT MATERIAL AND ACCESSORY DEVICES PER MANUFACTURERS INSTRUCTIONS UNLESS OTHERWISE DIRECTED BY THE OWNER/ENGINEER. ENSURE MAINTENANCE ACCESS IS PROVIDED.

CONSTRUCTION NOTES

1 ALL HORIZONTAL DUCT MAINS AND BRANCHES ARE ROUTED WITHIN THE ATTIC SPACE OF THE BUILDING (UNO).

2 INTAKE DUCT AND ELECTRIC DUCT HEATER (EDH-1) TO BE ROUTED AS CLOSE TO UNDERSIDE OF FINISHED CEILING AS PRACTICAL.

3 MOUNT LOUVER IN GABLE END OF TRUSSED ROOF.

4 USE ROOF TRUSSES ENGINEERED TO ALLOW MOUNTING OF AHU-1 ABOVE THE CEILING.

5 MOUNT MANUAL DAMPER REMOTE ACTUATOR IN AN ACCESSIBLE LOCATION ABOVE THE ACT GRID (TYPICAL ALL).

6 NOT USED.

7 CONCRETE EQUIPMENT PAD BY MECHANICAL CONTRACTOR. PAD SHALL BE 3.5" THICK WITH 4"X4" WWM REINFORCEMENT.

8 MOUNT INTAKE LOUVER AS CLOSE TO UNDERSIDE OF ROOF SOFFIT AS PRACTICAL.

SUPPLY DIFFUSER KEY

AIR PATTERN (1, 2, 3, OR 4-WAY)

DIFFUSER MARK

CFM

A2 200

NOTE: SEE DIFFUSERS ON PLANS FOR DIRECTION OF AIR PATTERN

COMMONWEALTH OF VIRGINIA
PHILLIP L. GENTRY
Lic. No. 025757
03/29/2024
PROFESSIONAL ENGINEER

DRAWINGS AND DESIGN © 2023 NORMAN SMITH ARCHITECTURE.
DRAWINGS AND SPECIFICATIONS AND THE IDEAS DESIGNS AND ARRANGEMENTS REPRESENTED THEREIN ARE THE EXCLUSIVE PROPERTY OF THE ARCHITECT AND ARE NOT TO BE USED IN WHOLE OR IN PART WITHOUT WRITTEN PERMISSION OF THE ARCHITECT AND THE ARCHITECT'S CONSULTANTS. THEY ARE TO BE RETURNED UPON REQUEST.

PLEASE READ BEFORE OPENING ELECTRONIC FILES: NSA FOUNDED:
THE ATTACHED ELECTRONIC FILE IS A WORK PRODUCT PROVIDED BY NORMAN SMITH ARCHITECTURE ("NSA") TO THE PROJECT OWNER AND PROJECT TEAM MEMBERS IN ACCORDANCE WITH THE AGREEMENT BETWEEN NSA AND THE OWNER. THE INFORMATION CONTAINED IN THIS ELECTRONIC FILE IS PROVIDED FOR INFORMATIONAL PURPOSES ONLY. NSA MAKES NO REPRESENTATIONS OR WARRANTIES OF ANY KIND REGARDING THE ACCURACY OF THE INFORMATION CONTAINED IN THE ELECTRONIC FILE, AND ANY USE OF THE ELECTRONIC FILE OR THE INFORMATION CONTAINED IN THE ELECTRONIC FILE IS AT THE RECIPIENT'S SOLE RISK AND WITHOUT LIABILITY OR LEGAL EXPOSURE TO NSA. IN NO EVENT SHALL NSA BE LIABLE FOR ANY DAMAGES, INCLUDING WITHOUT LIMITATION, DIRECT OR INDIRECT, SPECIAL OR CONSEQUENTIAL DAMAGES ARISING OUT OF OR RESULTING FROM ANY USE OF THE ELECTRONIC FILE OR THE INFORMATION CONTAINED IN THE ELECTRONIC FILE. RECIPIENT AGREES TO INDEMNIFY AND HOLD NSA HARMLESS FROM ANY AND ALL CLAIMS, LOSSES, AND EXPENSES ARISING OUT OF OR RESULTING FROM RECIPIENT'S USE OF THE ELECTRONIC FILE.
IF THE ELECTRONIC FILE IS USED TO GENERATE PRINTED DRAWINGS, THE PLATS AND OFFSETS AND DIMENSIONS ARE ACCURATE ONLY WHEN PRINTED ON A PLOTTER OF THE SAME MAKE AND MODEL AS THE PLOTTER NSA USED TO PRODUCE THE ORIGINAL DRAWINGS. NSA MAKES NO REPRESENTATIONS OR WARRANTIES OF ANY KIND REGARDING THE ACCURACY OF THE PRINTED DRAWINGS, AND ANY USE OF THE PRINTED DRAWINGS IS AT THE RECIPIENT'S SOLE RISK AND WITHOUT LIABILITY OR LEGAL EXPOSURE TO NSA. IN NO EVENT SHALL NSA BE LIABLE FOR ANY DAMAGES, INCLUDING WITHOUT LIMITATION, DIRECT OR INDIRECT, SPECIAL OR CONSEQUENTIAL DAMAGES ARISING OUT OF OR RESULTING FROM ANY USE OF THE PRINTED DRAWINGS. RECIPIENT AGREES TO INDEMNIFY AND HOLD NSA HARMLESS FROM ANY AND ALL CLAIMS, LOSSES, AND EXPENSES ARISING OUT OF OR RESULTING FROM RECIPIENT'S USE OF THE PRINTED DRAWINGS.
RECIPIENT ACCEPTS THE ELECTRONIC FILE AS-IS, WITHOUT ANY REPRESENTATIONS OR WARRANTIES OF ANY KIND. RECIPIENT ACKNOWLEDGES THAT NSA MAKES NO REPRESENTATIONS OR WARRANTIES AS TO THE ELECTRONIC FILE'S COMPATIBILITY WITH ANY HARDWARE OR SOFTWARE. RECIPIENT ACCEPTS THE ELECTRONIC FILE AS-IS, AND ASSUMES ALL RISK AND OBLIGATION RESPECTING THE RECIPIENT'S TRANSMISSION, USE, AND RELIANCE UPON THE ELECTRONIC FILE. RECIPIENT AGREES TO ASSUME ALL LIABILITY FOR ANY DAMAGES ARISING OUT OF OR RESULTING FROM RECIPIENT'S USE OF THE ELECTRONIC FILE, AND RECIPIENT AGREES TO INDEMNIFY AND HOLD NSA HARMLESS FROM ANY AND ALL CLAIMS, LOSSES, AND EXPENSES ARISING OUT OF OR RESULTING FROM RECIPIENT'S USE OF THE ELECTRONIC FILE.

No.	Date	Issue Notes	Zone	Appr
3	02/19/2024	permit comment response		
2	01/3/2024	release for bid		
1	12/7/2023	permit subm		
4	3/29/24	rebid revisions		

No.	Date	Revision Notes

Date: TBD
Designed By:
Drawn By:
Checked By:
Reviewed By:
Submitted By:
Project Manager:
Project: 23703.culpeper
Drawing Code:
CAD File Name:
Plot Date:

Design Firm
NORMAN SMITH ARCHITECTURE
1341 H Street, Washington, DC 20002-4906
3837 Slate Mills Road, Spenrville, VA 22740
T 202.462.5886 www.normansmitharchitecture.com

Consultant
VALLEY ENGINEERING
4901 Crowe Drive, Mount Crawford, VA 22841
T 540.434.6365 www.valleyesp.com

Project Title
Culpeper County
Community Pool Project
16388 Competition Drive
Culpeper, VA

Sheet Title
MECHANICAL
DUCTWORK PLAN - AREA 'C'

Scale 1/4" = 1'-0"

Sheet No.
M100.3
of

GENERAL NOTES

1. MOUNT TOP OF SPACE TEMPERATURE SENSORS AT 48" A.F.F.
2. REFER TO ARCHITECTURAL LIFE SAFETY PLAN FOR WALL RATINGS. PROVIDE FIRE STOPPING WHERE NECESSARY. MATCH RATING ILLUSTRATED ON ARCHITECTURAL PLAN.

☐ CONSTRUCTION NOTES

1 ELECTRIC UNIT HEATERS (EUH-1) PROVIDED WITH INTEGRAL THERMOSTAT (TYPICAL ALL).

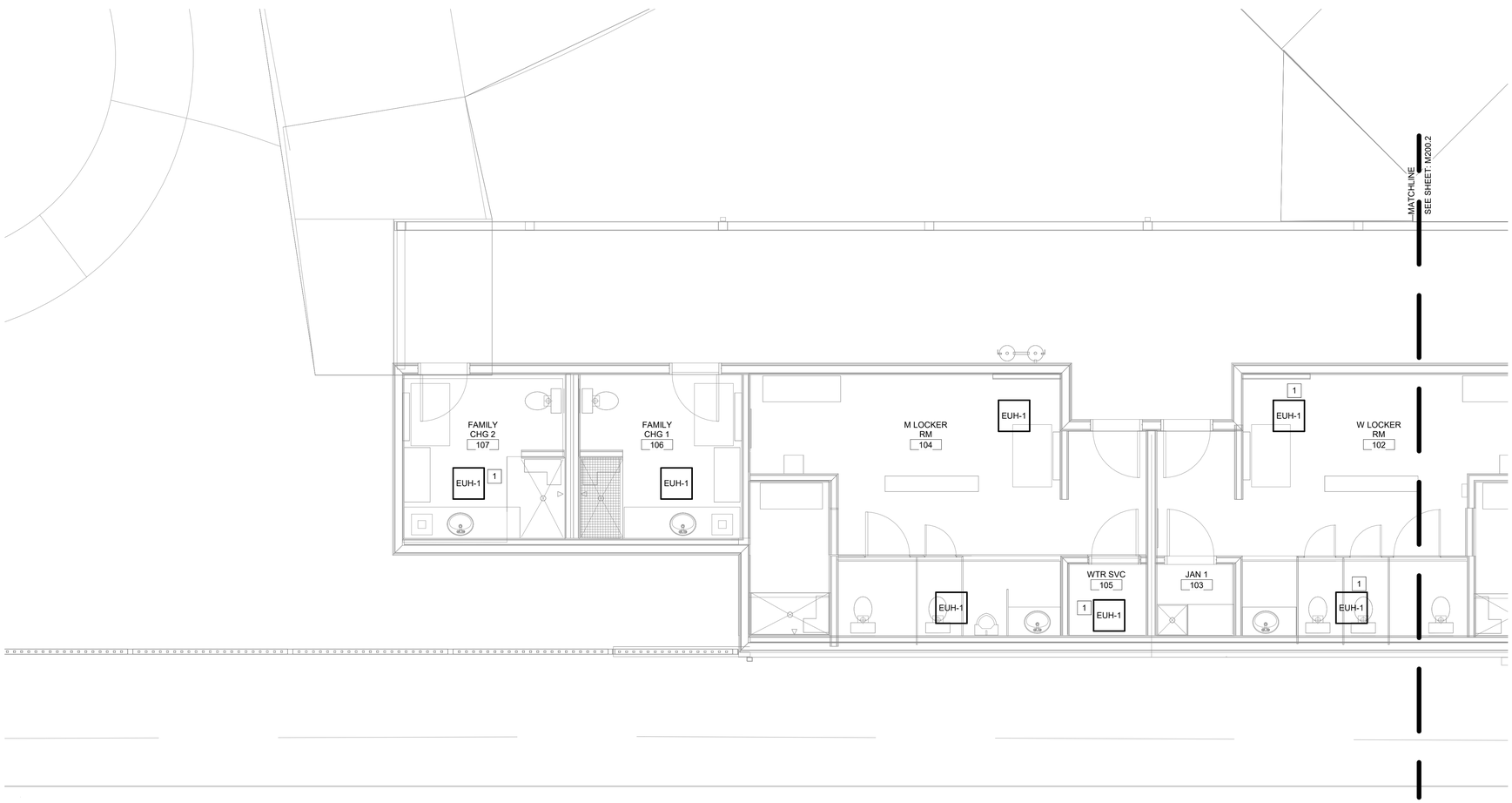

MECHANICAL PIPING PLAN - AREA 'A'

SCALE: 1/4" = 1'-0"

DRAWINGS AND DESIGN © 2023 NORMAN SMITH ARCHITECTURE.
DRAWINGS AND SPECIFICATIONS AND THE IDEAS DESIGNS AND ARRANGEMENTS REPRESENTED THEREIN ARE THE PROPERTY OF THE ARCHITECT AND REMAIN, WITHOUT EXCEPTION, THE PROPERTY OF THE ARCHITECT AND MAY NOT BE USED FOR ANY PURPOSE NOT SPECIFICALLY AGREED TO IN CONTRACT BETWEEN PARTIES TO AND OWNER.
THE CONTRACTOR SHALL REPORT ALL ERRORS, INCONSISTENCIES OR OMISSIONS HE DISCOVERS TO THE ARCHITECT AND ARE LIABLE FOR ALL COSTS INCURRED FOR WORK DONE AFTER SUCH DISCOVERY UNTIL THEY ARE LEGALLY OR CONTRACTUALLY MODIFIED BY THE ARCHITECT AND OWNER.
VERIFY THAT THE ARE LEGAL AND ACCEPTABLE UNDER APPLICABLE CODES AND REGULATIONS, ADDENDA, RFTS, CHANGE ORDERS AND OTHER MODIFICATIONS TO THE CONTRACT DOCUMENTS PRIOR TO CONSTRUCTION.
VERIFY ALL ELEVATIONS AND FIELD CONDITIONS PRIOR TO CONSTRUCTION. IN THE EVENT OF DISCREPANCIES, NOTIFY THE ARCHITECT AND OWNER'S PROJECT MANAGER OF ANY VARIANCE BETWEEN ACTUAL AND DRAWN CONDITIONS.

PLAN REVIEW STAMP (WHEN ELECTRONICALLY SEALED, WHEN PRINTED)

THE ENGINEER OF RECORD HAS REVIEWED THE ARCHITECTURAL DRAWINGS, SPECIFICATIONS AND OTHER DOCUMENTS PREPARED BY OTHERS WITHIN THE ENGINEER OF RECORD'S DISCIPLINE TO ESTABLISH THE GENERAL SCOPE, QUALITY AND ARRANGEMENT OF THE PROJECT AS A WHOLE. BASED ON THE INFORMATION CONTAINED IN THOSE DOCUMENTS, THE ENGINEER OF RECORD HAS ADDED ENGINEERING DETAILS TO THE DOCUMENTS PREPARED BY OTHERS IN ACCORDANCE WITH THE STANDARD OF CARE EXERCISED BY CONSULTANTS PERFORMING SUCH SERVICES IN THE SAME OR SIMILAR LOCALITY UNDER THE SAME OR SIMILAR CIRCUMSTANCES. THE ENGINEER OF RECORD ASSUMES RESPONSIBILITY FOR COMPLIANCE WITH APPLICABLE CODES, LAWS AND REGULATIONS ONLY FOR DESIGN ELEMENTS SHOWN ON DRAWINGS AND DESCRIBED IN SPECIFICATIONS PREPARED BY THE ENGINEER OF RECORD. THE ENGINEER OF RECORD ASSUMES NO RESPONSIBILITY FOR COORDINATION BETWEEN DISCIPLINES NOT UNDER THE ENGINEER OF RECORD'S CONTROL.
IF THERE EXISTS ANY VIDEO OR VISUAL AND/OR AUDIO PHYSICAL PRESENTATION, THE ENTIRE OR EFFECTIVE AND GENUINE WORK OF AUTHORSHIP IN THE PRESENTATION IS THE PROPRIETARY PROPERTY OF THE ENGINEER OF RECORD AND MAY NOT BE REPRODUCED OR USED IN OTHER PRESENTATIONS WITHOUT THE ENGINEER OF RECORD'S WRITTEN CONSENT.
THE ENGINEER OF RECORD'S REVIEW OF AND RESPONSE TO SHOP DRAWINGS, PRODUCT DATA, SAMPLES AND OTHER SUBMITTALS OF THE CONTRACTOR OR SUBCONTRACTORS SHALL BE LIMITED TO REVIEW FOR GENERAL CONFORMANCE WITH THE DESIGN CONCEPT AND GENERAL COMPLIANCE WITH INFORMATION GIVEN IN THE CONTRACT DOCUMENTS. ENGINEER OF RECORD'S REVIEW OF AND RESPONSE TO SHOP DRAWINGS, PRODUCT DATA, SAMPLES AND OTHER SUBMITTALS SHALL NOT INCLUDE REVIEW OF DETAILS, QUANTITIES, PERFORMANCE, DIMENSIONS, TECHNIQUES OF CONSTRUCTION, COORDINATION OF WORK WITH OTHER TRADES, OR CONFORMANCE WITH FEDERAL, STATE AND LOCAL LAWS, CODES AND REGULATIONS, UNLESS SPECIFICALLY STATED OTHERWISE. THE ENGINEER OF RECORD'S REVIEW OF AND RESPONSE TO SHOP DRAWINGS, PRODUCT DATA, SAMPLES AND OTHER SUBMITTALS SHALL NOT RELIEVE THE CONTRACTOR OF ANY OBLIGATION UNDER THE CONTRACT DOCUMENTS.

No.	Date	Revision Notes	Zone	Appr

No.	Date	Issue Notes
2	01/3/2024	release for bid
1	12/7/2023	permit subm

Designed By: TBD
Drawn By: Revision
Checked By: Plot Date 23/03/culpeper
Reviewed By: Drawing Code
Submitted By: CAD File Name
Project Manager: Plot Date

Design Firm
NORMAN SMITH ARCHITECTURE
1341 H Street, Washington, DC 20002-4906
3537 State Mills Road, Sperryville, VA 22740
T 202.462.5886 www.normansmitharchitecture.com

Consultant
VALLEY ENGINEERING
4991 Crowe Drive, Mount Crawford, VA 22841
T 540.434.6365 www.valleyesp.com

Project Title: Culpeper County Community Pool Project
163868 Competition Drive
Culpeper, VA

Sheet Title: MECHANICAL PIPING PLAN - AREA 'A'

Scale: 1/4" = 1'-0"

Sheet No.: M200.1

of

COMMONWEALTH OF VIRGINIA
PHILLIP L. GENTRY
Lic. No. 025757
01/03/2024
PROFESSIONAL ENGINEER

GENERAL NOTES

1. MOUNT TOP OF SPACE TEMPERATURE SENSORS AT 48" A.F.F.
2. REFER TO ARCHITECTURAL LIFE SAFETY PLAN FOR WALL RATINGS. PROVIDE FIRE STOPPING WHERE NECESSARY. MATCH RATING ILLUSTRATED ON ARCHITECTURAL PLAN.

☐ CONSTRUCTION NOTES

1 ROUTE CONDENSATE PIPE DOWN FROM ATTIC SPACE ALONGSIDE ROOF DRAIN DOWNSPOUT.

2 REFRIGERANT PIPING SHOWN FOR CIRCUITING CLARITY, CONTRACTOR TO ROUTE IN MOST DIRECT MANNER AVOIDING OTHER TRADES AND STRUCTURE.

3 TERMINATE SECONDARY CONDENSATE LINE JUST BELOW SOFFIT.

4 ROUTE REFRIGERANT PIPING MAINS IN THE ATTIC TRUSS SPACE OF THE BUILDING.

5 ELECTRIC UNIT HEATERS (EUH-1) PROVIDED WITH INTEGRAL THERMOSTAT (TYPICAL ALL).

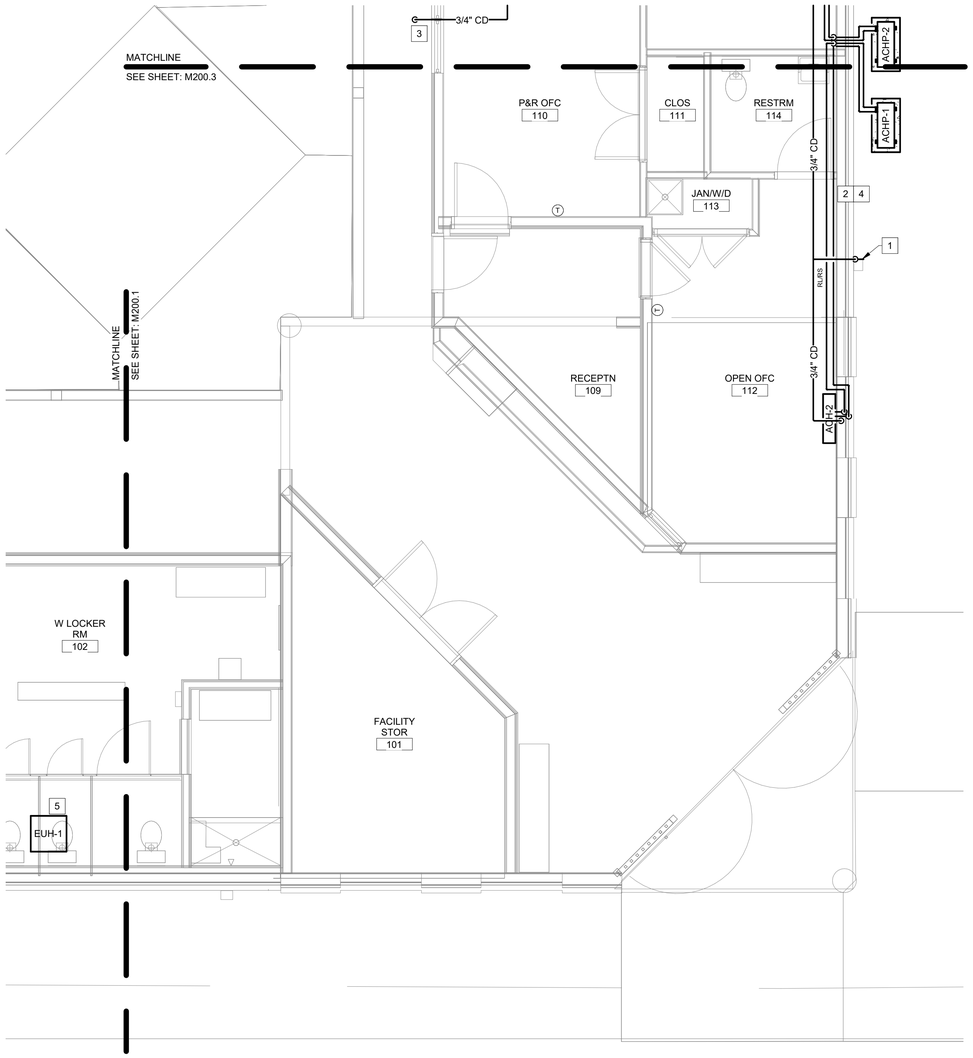

MECHANICAL PIPING PLAN - AREA 'B'

SCALE: 1/4" = 1'-0"

COMMONWEALTH OF VIRGINIA
PHILLIP L. GENTRY
Lic. No. 025757
01/03/2024
PROFESSIONAL ENGINEER

PLEASE READ BEFORE USING ELECTRONIC FILES: NORM SMITH ARCHITECTURE

DRAWINGS AND DESIGN IS NORMAN SMITH ARCHITECTURE.
DRAWINGS AND SPECIFICATIONS AND THE IDEAS DESIGNS AND ARRANGEMENTS REPRESENTED THEREIN ARE THE PROPERTY OF THE ARCHITECT AND REMAIN, WITHOUT EXCEPTION, THE PROPERTY OF THE ARCHITECT AND ARE TO BE RETURNED UPON REQUEST. THEY ARE NOT TO BE USED ON ANY PROJECT NOT CONTRACTED WITH THE ARCHITECT AND ARE NOT TO BE CHANGED OR MODIFIED BY THE OWNER, EXPRESSLY FOR USE ON ANY PROJECT NOT CONTRACTED WITH THE ARCHITECT AND OWNER.

THE CONTRACTOR SHALL VERIFY ALL DIMENSIONS, CONDITIONS AND DETAILS AS SHOWN ON THE DRAWINGS AND IN THE SPECIFICATIONS, AND SHALL REPORT TO THE ARCHITECT ANY ERRORS, OMISSIONS, CONFLICTS OR DISCREPANCIES IN THE DRAWINGS OR SPECIFICATIONS, ADDENDA, RFIS, CHANGE ORDERS AND OTHER MODIFICATIONS, PRIOR TO THE ORDERING OF MATERIALS OR THE PERFORMANCE OF WORK. DO NOT SCALE DRAWINGS. USE ONLY THE LATEST REVISED DRAWINGS AND SPECIFICATIONS.

VERIFY ALL EXISTING AND FIELD CONDITIONS PRIOR TO CONTRACTING IN ITS ENTIRETY. ANY DEVIATIONS FROM THE DRAWINGS MUST BE APPROVED BY THE OWNER'S PROJECT MANAGER OR ARCHITECT.

IF THERE EXISTS AN ISSUE OR ISSUES AND/OR PROVIDE PROPOSALS, THE ARCHITECT AND OWNER ARE NOTIFIED IN WRITING WITHIN 10 DAYS OF THE ISSUANCE OF THE DRAWINGS, OR THE ISSUE OR ISSUES SHALL BE DEEMED WAIVED. THE ARCHITECT AND OWNER ASSUME NO RESPONSIBILITY FOR CONSTRUCTION PERFORMED ON ANY ISSUE OR ISSUES NOT REPORTED IN WRITING WITHIN 10 DAYS OF THE ISSUANCE OF THE DRAWINGS. CONTRACTOR SHALL BE RESPONSIBLE FOR ALL COSTS RELATED TO REMOVAL, REPAIR, REPLACEMENT, CORRECTIONS, DELAYS, ETC. RESULTING FROM ANY ISSUE OR ISSUES NOT REPORTED IN WRITING WITHIN 10 DAYS OF THE ISSUANCE OF THE DRAWINGS.

IF THERE EXISTS AN ISSUE OR ISSUES AND/OR PROVIDE PROPOSALS, THE ARCHITECT AND OWNER ARE NOTIFIED IN WRITING WITHIN 10 DAYS OF THE ISSUANCE OF THE DRAWINGS, OR THE ISSUE OR ISSUES SHALL BE DEEMED WAIVED. THE ARCHITECT AND OWNER ASSUME NO RESPONSIBILITY FOR CONSTRUCTION PERFORMED ON ANY ISSUE OR ISSUES NOT REPORTED IN WRITING WITHIN 10 DAYS OF THE ISSUANCE OF THE DRAWINGS. CONTRACTOR SHALL BE RESPONSIBLE FOR ALL COSTS RELATED TO REMOVAL, REPAIR, REPLACEMENT, CORRECTIONS, DELAYS, ETC. RESULTING FROM ANY ISSUE OR ISSUES NOT REPORTED IN WRITING WITHIN 10 DAYS OF THE ISSUANCE OF THE DRAWINGS.

ALL DRAWINGS, SPECIFICATIONS, ADDENDA, RFIS, CHANGE ORDERS AND OTHER MODIFICATIONS, PRIOR TO THE ORDERING OF MATERIALS OR THE PERFORMANCE OF WORK. DO NOT SCALE DRAWINGS. USE ONLY THE LATEST REVISED DRAWINGS AND SPECIFICATIONS.

VERIFY ALL EXISTING AND FIELD CONDITIONS PRIOR TO CONTRACTING IN ITS ENTIRETY. ANY DEVIATIONS FROM THE DRAWINGS MUST BE APPROVED BY THE OWNER'S PROJECT MANAGER OR ARCHITECT.

IF THERE EXISTS AN ISSUE OR ISSUES AND/OR PROVIDE PROPOSALS, THE ARCHITECT AND OWNER ARE NOTIFIED IN WRITING WITHIN 10 DAYS OF THE ISSUANCE OF THE DRAWINGS, OR THE ISSUE OR ISSUES SHALL BE DEEMED WAIVED. THE ARCHITECT AND OWNER ASSUME NO RESPONSIBILITY FOR CONSTRUCTION PERFORMED ON ANY ISSUE OR ISSUES NOT REPORTED IN WRITING WITHIN 10 DAYS OF THE ISSUANCE OF THE DRAWINGS. CONTRACTOR SHALL BE RESPONSIBLE FOR ALL COSTS RELATED TO REMOVAL, REPAIR, REPLACEMENT, CORRECTIONS, DELAYS, ETC. RESULTING FROM ANY ISSUE OR ISSUES NOT REPORTED IN WRITING WITHIN 10 DAYS OF THE ISSUANCE OF THE DRAWINGS.

No.	Date	Revision Notes	Zone	Appr

No.	Date	Issue Notes
2	01/3/2024	release for bid
1	12/7/2023	permit subm

Designed By: | Date: TBD
Drawn By: | Release:
Checked By: | Plotted: 23/7/3:culpeper
Reviewed By: | Drawing Code:
Submitted By: | CAD File Name:
Project Manager: | Plot Date:

Design Firm
NORMAN SMITH ARCHITECTURE
13411 H Street, Washington, DC 20002-4506
3637 Slate Mills Road, Spenryville, VA 22740
T 202.462.5586 www.normansmitharchitecture.com

Consultant
VALLEY ENGINEERING
4901 Crowe Drive, Mount Crawford, VA 22841
T 540.434.6365 www.valleyesp.com

Project Title: Culpeper County Community Pool Project 163588 Competition Drive Culpeper, VA

Sheet Title: MECHANICAL PIPING PLAN - AREA 'B'

Scale: 1/4" = 1'-0"

Sheet No. M200.2

of

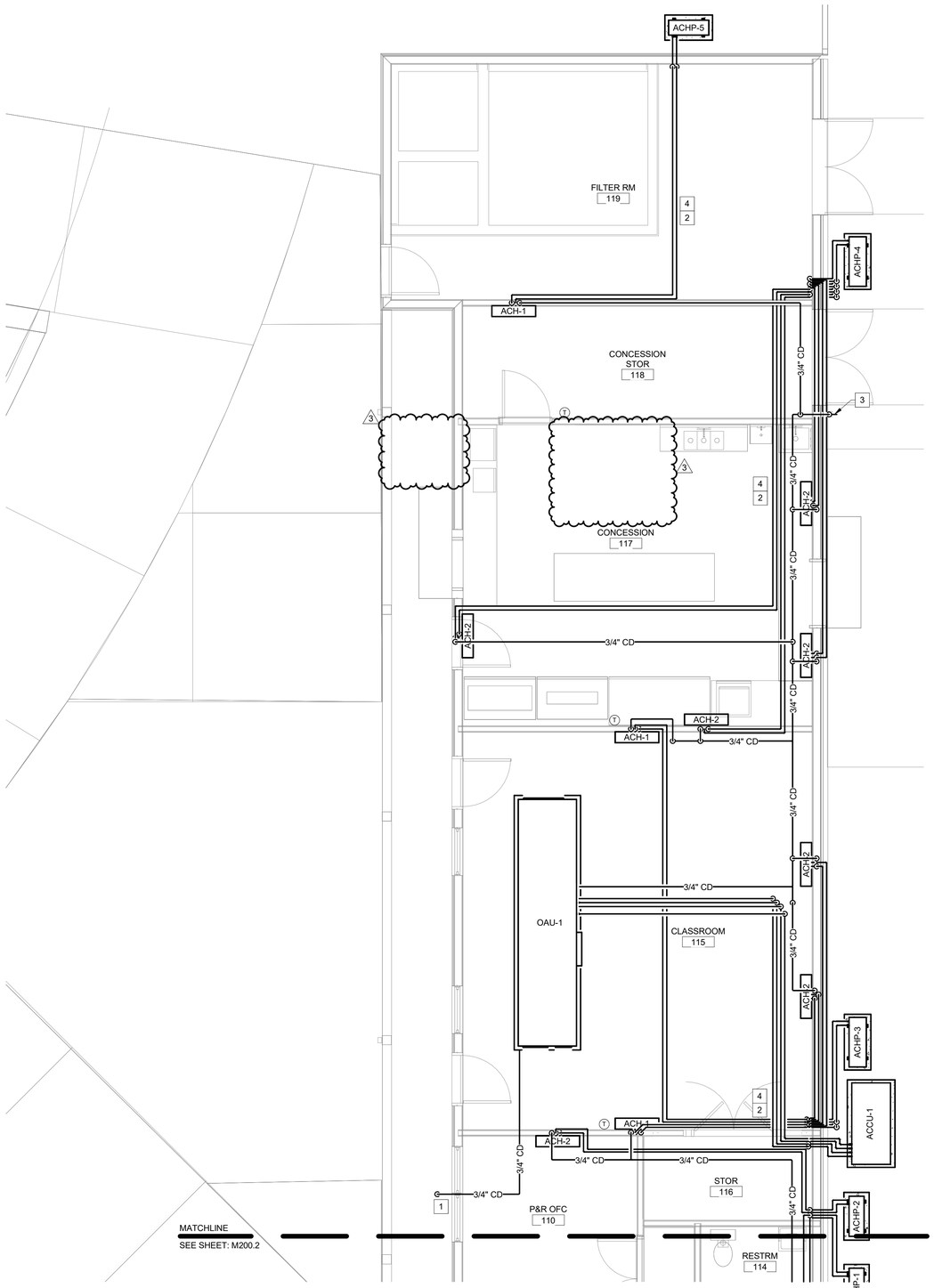

MECHANICAL PIPING PLAN - AREA 'C'

SCALE: 1/4" = 1'-0"

GENERAL NOTES

1. MOUNT TOP OF SPACE TEMPERATURE SENSORS AT 48" A.F.F.
2. REFER TO ARCHITECTURAL LIFE SAFETY PLAN FOR WALL RATINGS. PROVIDE FIRE STOPPING WHERE NECESSARY. MATCH RATING ILLUSTRATED ON ARCHITECTURAL PLAN.

CONSTRUCTION NOTES

1 TERMINATE SECONDARY CONDENSATE LINE JUST BELOW SOFFIT.

2 REFRIGERANT PIPING SHOWN FOR CIRCUITING CLARITY, CONTRACTOR TO ROUTE IN MOST DIRECT MANNER AVOIDING OTHER TRADES AND STRUCTURE.

3 ROUTE CONDENSATE PIPE DOWN FROM ATTIC SPACE ALONGSIDE ROOF DRAIN DOWNSPOUT.

4 ROUTE REFRIGERANT PIPING MAINS IN THE ATTIC TRUSS SPACE OF THE BUILDING.

PLEASE READ BEFORE OPENING ELECTRONIC FILES: NMA PROVIDES:
DRAWINGS AND SPECIFICATIONS AND THE IDEAS, DESIGNS AND ARRANGEMENTS REPRESENTED THEREIN, ARE THE EXCLUSIVE PROPERTY OF THE ARCHITECT AND MUST BE RETURNED UPON REQUEST. THEY ARE NOT TO BE USED IN WHOLE OR IN PART FOR ANY PURPOSE NOT SPECIFICALLY AGREED TO IN WRITING BY THE ARCHITECT AND ARE NOT TO BE DISCLOSED OR REPRODUCED WITHOUT THE ARCHITECT'S WRITTEN CONSENT.
DRAWINGS AND DESIGN IN ELECTRONIC FILES: NMA PROVIDES:
THE DRAWINGS AND SPECIFICATIONS (THE "DOCUMENTS") WE (OR OUR CONSULTANTS) PREPARE ARE INSTRUMENTS OF OUR SERVICE FOR USE SOLELY WITH RESPECT TO THIS PROJECT. WE ARE THE OWNERS OF THE DOCUMENTS (OR HAVE THE RIGHT TO USE THEM) AND WE RETAIN THE PROPERTY RIGHTS, INCLUDING COPYRIGHT. YOU MAY USE THE DOCUMENTS TO MAKE THE PROJECT DESCRIBED IN THE DOCUMENTS. YOU MAY MAKE COPIES OF THE DOCUMENTS AS YOU MAY REASONABLY FIND NECESSARY FOR THE PROJECT, BUT WITHOUT REMOVING OUR COPYRIGHT NOTICE. YOU MAY NOT USE THE DOCUMENTS FOR ANY OTHER PROJECT OR FOR ANY OTHER PURPOSE, NOR MAY YOU GIVE THE DOCUMENTS TO ANYONE ELSE. THE FILES ARE BEING PROVIDED AS A CONVENIENCE TO THE OWNER AND CONTRACTORS. THE OWNER AND CONTRACTORS AGREE THAT THEY WILL USE THE FILES AT THEIR OWN RISK AND THEY WILL INDEMNIFY AND HOLD US HARMLESS FROM ANY CLAIMS, LIABILITY, OR DAMAGES RESULTING FROM THEIR USE OF THE FILES. THE FILES MAY DEVIATE FROM THE PRINTED CONSTRUCTION DOCUMENTS AS A RESULT OF SUBSEQUENT CHANGES MADE IN THE PROCESS OF CONSTRUCTION AND WE HAVE NO OBLIGATION TO UPDATE THE FILES TO REFLECT SUBSEQUENT CHANGES.
IF THE FILES ARE USED TO VERIFY AS-BUILT CONDITIONS, THE FILES WILL BE OFFERED AS GENERATED AND WITHOUT WARRANTY OF ACCURACY. THE OWNER AND CONTRACTORS AGREE THAT THEY WILL USE THE FILES AT THEIR OWN RISK AND THEY WILL INDEMNIFY AND HOLD US HARMLESS FROM ANY CLAIMS, LIABILITY, OR DAMAGES RESULTING FROM THEIR USE OF THE FILES. THE FILES MAY DEVIATE FROM THE PRINTED CONSTRUCTION DOCUMENTS AS A RESULT OF SUBSEQUENT CHANGES MADE IN THE PROCESS OF CONSTRUCTION AND WE HAVE NO OBLIGATION TO UPDATE THE FILES TO REFLECT SUBSEQUENT CHANGES.
VERIFY ALL ELEVATIONS AND FIELD CONDITIONS PRIOR TO CONTRACTING WITH THE SUBCONTRACTOR. ANY DISCREPANCIES MUST BE REPORTED TO THE ARCHITECT AND OWNER'S PROJECT MANAGER OF ANY VARIANCE BETWEEN ACTUAL AND DRAWN CONDITIONS.

No.	Date	Revision Notes	Zone	Appr
3	3/29/24	rebid revisions		

No.	Date	Issue Notes
2	01/3/2024	release for bid
1	12/7/2023	permit subm

Design Firm
NORMAN SMITH ARCHITECTURE
1341 H Street, Washington, DC 20002-4906
3637 Slate Mills Road, Spenrville, VA 22740
T 202.462.5986 www.normansmitharchitecture.com

Consultant
VALLEY ENGINEERING
4901 Crowe Drive, Mount Crawford, VA 22841
T 540.434.6365 www.valleyesp.com

Date TBD
Reviewer
Drawn by 23703.culpeper
Drawing Code
CAD File Name
Plot Date

Designed By
Drawn By
Checked By
Reviewed By
Submitted By
Project Manager

Project Title
Culpeper County
Community Pool Project
16388 Competition Drive
Culpeper, VA

Sheet Title
MECHANICAL PIPING
PLAN - AREA 'C'

Scale 1/4" = 1'-0"

Sheet No.
M200.3
of

COMMONWEALTH OF VIRGINIA
PHILLIP L. GENTRY
Lic. No. 025757
03/29/2024
PROFESSIONAL ENGINEER

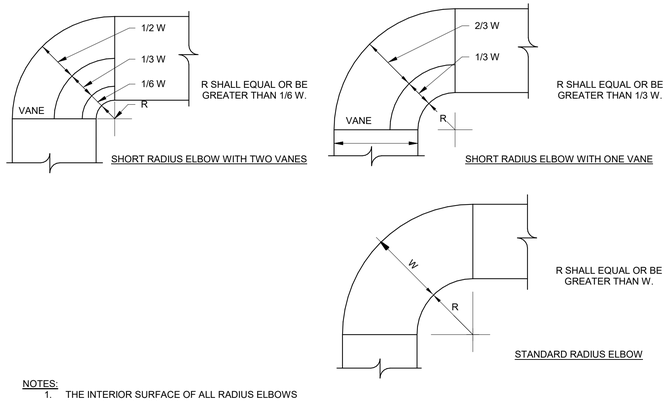

NOTES:
1. THE INTERIOR SURFACE OF ALL RADIUS ELBOWS SHALL BE MADE ROUND.
2. ALL STANDARD RADIUS ELBOWS SHOWN ON PLANS MAY BE MADE SHORT RADIUS ELBOWS. ALL SHORT RADIUS ELBOWS SHALL HAVE VANES. VANES SHALL BE CONSTRUCTED, SUPPORTED AND INSTALLED AS DETAILED PER SMACNA.

RADIUS ELBOW

NOT TO SCALE

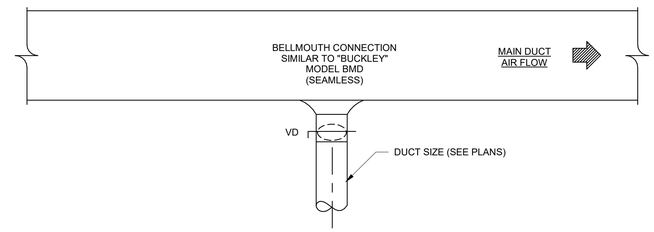

THIS DETAIL APPLIES TO SINGLE TAKEOFFS TO DIFFUSER AS WELL AS BRANCH TAKEOFFS. IT ALSO APPLIES TO TAKEOFFS IN THE HORIZONTAL OR VERTICAL DIRECTION. SPIN-IN TAKEOFFS NOT ALLOWED.

BELL MOUTH DUCT TAKEOFF DETAIL

NOT TO SCALE

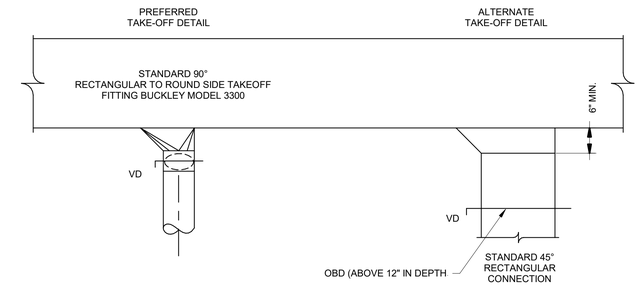

THIS DETAIL APPLIES TO SINGLE TAKEOFFS TO DIFFUSER AS WELL AS BRANCH TAKEOFFS. IT ALSO APPLIES TO TAKEOFFS IN THE HORIZONTAL OR VERTICAL DIRECTION. SPIN-IN TAKEOFFS NOT ALLOWED.

45° DUCT TAKEOFF DETAIL

NOT TO SCALE

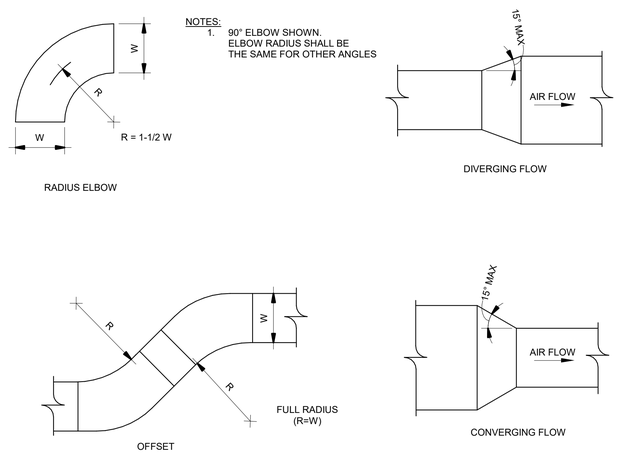

NOTES:
1. 90° ELBOW SHOWN. ELBOW RADIUS SHALL BE THE SAME FOR OTHER ANGLES

RECTANGULAR TRANSITIONS, OFFSETS, AND ELBOWS

NOT TO SCALE

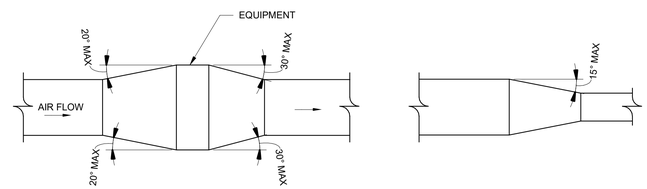

PLAN OR SIDE VIEW

DUCT TRANSITION WITH EQUIPMENT IN DUCT

PLAN OR SIDE VIEW

DUCT TRANSITION

NOTES:
1. UNLESS OTHERWISE INDICATED ON PLANS, MAXIMUM ANGLES SHOWN SHALL APPLY.

DUCT TRANSITION DETAIL

NOT TO SCALE

NOTES:
1. ALL VANED ELBOWS SHALL BE CONSTRUCTED AND INSTALLED AS DETAILED BY SMACNA.
2. WHEN W1 DOES NOT EQUAL W2 VANE SHALL BE SINGLE VANE TYPE REGARDLESS OF W DIMENSION.
3. ALL SINGLE VANES SHALL HAVE A 2 INCH RADIUS, 1 INCH MAXIMUM SPACE BETWEEN VANES AND A 3/4 INCH TRAILING EDGE.
4. WHEN W1 EQUALS W2 AND W1 IS GREATER THAN 20 INCHES VANES SHALL BE DOUBLE VANE TYPE.

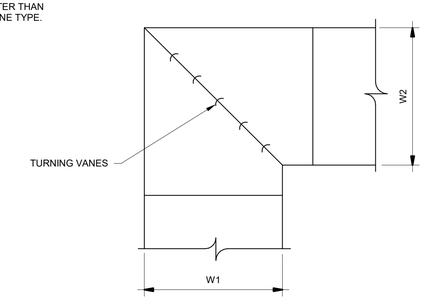

SQUARE VANED ELBOWS

NOT TO SCALE

DRAWINGS AND DESIGN © 2023 NORMAN SMITH ARCHITECTURE.
DRAWINGS AND SPECIFICATIONS AND THE IDEAS DESIGNS AND ARRANGEMENTS REPRESENTED THEREIN ARE THE PROPERTY OF THE ARCHITECT AND PERSONAL WITHOUT EXCEPTION, THE PROPERTY OF THE ARCHITECT AND MAY NOT BE USED FOR ANY PURPOSE NOT SPECIFICALLY MODIFIED BY THE CONTRACT BETWEEN PLAINTIFF AND OWNER.
THE DRAWINGS AND SPECIFICATIONS ARE NOT SPECIFICALLY MODIFIED TO ANY OTHER PURPOSE OR BY ANY OTHER PERSON.
VERIFY THAT THE ARE VERBICAL OF THE CORRECT AND CURRENT DRAWINGS AND SPECIFICATIONS BEFORE PROCEEDING TO CONSTRUCT.
SPECIFICATIONS, ADDENDA, RFIS, CHANGE ORDERS AND OTHER DOCUMENTS MAY NOT BE ISSUED TO THE CONTRACTOR OR OTHER PERSONS OR ENTITIES.
VERIFY ALL ELEVATIONS AND CONDITIONS PRIOR TO CONTINUING WITH ANY WORK. ANY DISCREPANCIES MUST BE REPORTED TO THE OWNER'S PROJECT MANAGER OF ANY VARIANCE BETWEEN ACTUAL AND DRAWINGS/SPECS.

PLAN REVIEW BEFORE CORING ELECTRICAL PLATES AND PLUMBING.
DRAWINGS AND SPECIFICATIONS ARE NOT SPECIFICALLY MODIFIED TO ANY OTHER PURPOSE OR BY ANY OTHER PERSON. THE DRAWINGS AND SPECIFICATIONS ARE THE PROPERTY OF THE ARCHITECT AND MAY NOT BE USED FOR ANY PURPOSE NOT SPECIFICALLY MODIFIED BY THE CONTRACT BETWEEN PLAINTIFF AND OWNER.
THE DRAWINGS AND SPECIFICATIONS ARE NOT SPECIFICALLY MODIFIED TO ANY OTHER PURPOSE OR BY ANY OTHER PERSON.
VERIFY THAT THE ARE VERBICAL OF THE CORRECT AND CURRENT DRAWINGS AND SPECIFICATIONS BEFORE PROCEEDING TO CONSTRUCT.
SPECIFICATIONS, ADDENDA, RFIS, CHANGE ORDERS AND OTHER DOCUMENTS MAY NOT BE ISSUED TO THE CONTRACTOR OR OTHER PERSONS OR ENTITIES.
VERIFY ALL ELEVATIONS AND CONDITIONS PRIOR TO CONTINUING WITH ANY WORK. ANY DISCREPANCIES MUST BE REPORTED TO THE OWNER'S PROJECT MANAGER OF ANY VARIANCE BETWEEN ACTUAL AND DRAWINGS/SPECS.

No.	Date	Issue Notes	Zone	Appr
2	01/3/2024	release for bid		
1	12/7/2023	permit subm		

Date: TBD
Designed By:
Drawn By:
Checked By:
Reviewed By:
Submitted By:
Project Manager:
Project No: 23703.culpeper
Drawing Code:
CAD File Name:
Plot Date:

Design Firm
NORMAN SMITH ARCHITECTURE
1341 H Street, Washington, DC 20002-4906
3537 State Mills Road, Sperryville, VA 22740
T 202.462.5888 www.normansmitharchitecture.com

Consultant
VALLEY ENGINEERING
4991 Crowe Drive, Mount Crawford, VA 22841
T 540.434.6365 www.valleyesp.com

Project Title: Culpeper County Community Food Project
163368 Competition Drive
Culpeper, VA

Sheet Title: MECHANICAL DETAILS

Scale: NTS

Sheet No.: M500.1

of

NOTES:
USE #10 X 3/4" SELF TAPPING CADMIUM PLATED SHEET METAL SCREWS. TIGHTEN ALL STRAPS AGAINST DUCT AND SUPPORT MEMBERS. (TYP.)

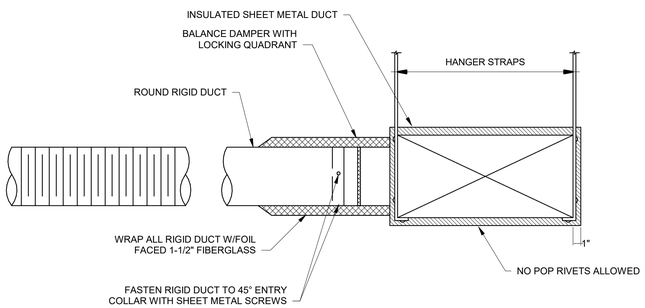

FLEX DUCT WITH 45° ENTRY COLLAR

NOT TO SCALE

NOTE:
"X" DIMENSION SHALL BE THE GREATER OF THE FOLLOWING:
1. BRANCH DUCT WIDTH.
2. 2" LESS THAN MAIN DUCT WIDTH.

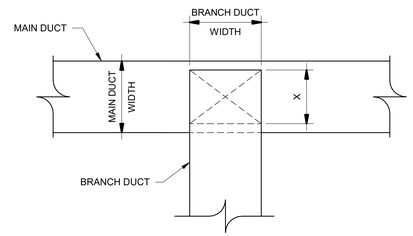

PLAN VIEW

NOTES:
1. "X" DIMENSION DOES NOT NECESSARILY EQUAL BRANCH DUCT HEIGHT.
2. PROVIDE 45° TAKEOFF ON BRANCH DUCT CONNECTION TO MAIN DUCT.
3. DETAIL TYPICAL FOR SUPPLY, RETURN, AND EXHAUST.

TOP/BOTTOM BRANCH TAKEOFF DETAIL

NOT TO SCALE

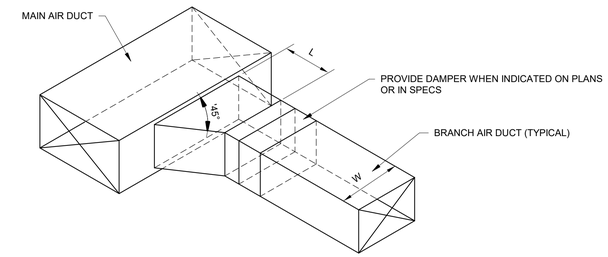

NOTES:
L=1/4 W, 6" MINIMUM

SUPPLY OR RETURN AIR DUCT CONNECTION DETAIL

NOT TO SCALE

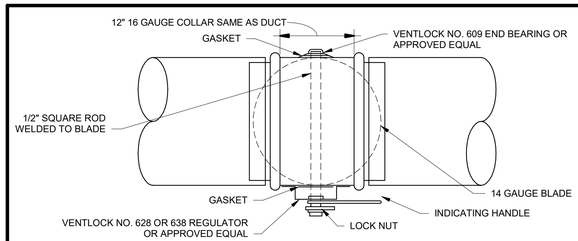

DUCTS UP TO 14"DIA.

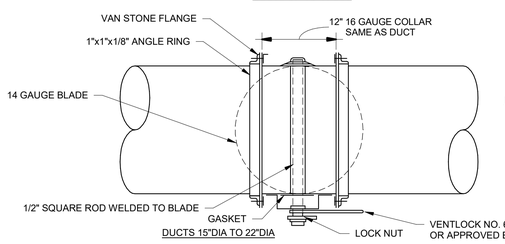

DUCTS 15"DIA TO 22"DIA

NOTES:
1. FOR DUCTS OVER 22"DIA. USED OPPOSED BLADE VOLUME DAMPER
2. ALL QUADRANT OPERATORS SHALL BE EXTENDED TO OUTSIDE OF INSULATION

ROUND VOLUME DAMPER

NOT TO SCALE

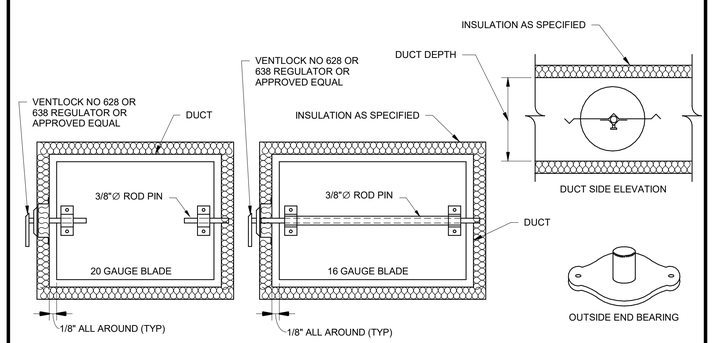

NOTES:
1. FOR RECTANGULAR DUCTS OVER 18" HIGH USE OBD.
2. ALL BRANCH DUCTS (SUPPLY, RETURN & EXHAUST) TO ALL TEMINAL DEVICES SHALL HAVE VOLUME DAMPERS,
3. ALL QUADRANT OPERATORS SHALL BE EXTENDED TO OUTSIDE OF INSULATION.

RECTANGULAR VOLUME DAMPER (SINGLE BLADE)

NOT TO SCALE

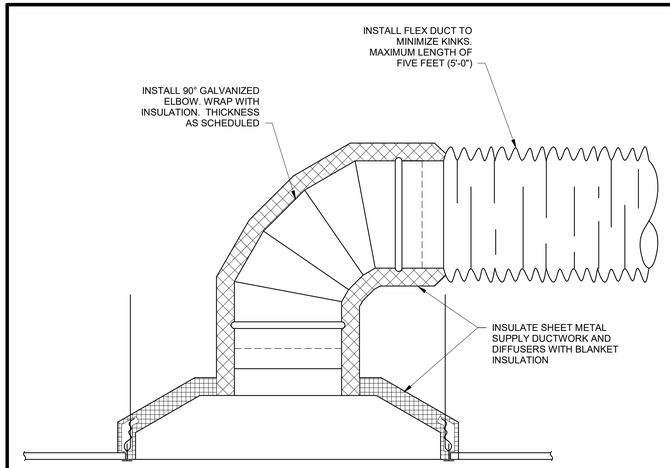

SUPPLY DIFFUSER W/ELBOW CONNECTION INSTALLATION DETAIL

NOT TO SCALE

DRAWINGS AND DESIGN © 2023 NORMAN SMITH ARCHITECTURE.
DRAWINGS AND SPECIFICATIONS AND THE IDEAS DESIGNS AND ARRANGEMENTS REPRESENTED THEREIN ARE THE EXCLUSIVE PROPERTY OF THE ARCHITECT AND PROFESSIONAL ENGINEER, WITHOUT EXCEPTION, THE PROPERTY OF THE ARCHITECT AND PROFESSIONAL ENGINEER AND WERE CREATED, EVOLVED AND DEVELOPED FOR USE ON THE CONTRACT BETWEEN PARTIES. THEY ARE NOT TO BE REPRODUCED, CHANGED OR COPIED IN ANY FORM OR MANNER WHATSOEVER, NOR ARE THEY TO BE ASSIGNED TO ANY THIRD PARTY, WITHOUT FIRST OBTAINING THE EXPRESS WRITTEN PERMISSION AND CONSENT OF THE ARCHITECT AND PROFESSIONAL ENGINEER.

PLEASE REFER BEFORE CERTAIN ELECTRONIC FILES WERE PROVIDED.
DRAWINGS AND SPECIFICATIONS ARE THE PROPERTY OF THE ARCHITECT AND PROFESSIONAL ENGINEER AND ARE NOT TO BE REPRODUCED, CHANGED OR COPIED IN ANY FORM OR MANNER WHATSOEVER, NOR ARE THEY TO BE ASSIGNED TO ANY THIRD PARTY, WITHOUT FIRST OBTAINING THE EXPRESS WRITTEN PERMISSION AND CONSENT OF THE ARCHITECT AND PROFESSIONAL ENGINEER.
IN ADDITION TO THE FOREGOING, ELECTRONIC FILES MAY NOT BE USED FOR ANY PURPOSE NOT SPECIFICALLY ASSOCIATED WITH THIS PROJECT IN ACCORDANCE WITH THE TERMS OF THE ARCHITECT AND PROFESSIONAL ENGINEER'S PROPOSAL, INCLUDING WITHOUT LIMITATION THE GENERAL DISTRIBUTION RESTRICTION, THE PROFESSIONAL SEAL REQUIREMENT, THE LIMITED LICENSE TO USE THE INSTRUMENTS OF SERVICE FOR THE PROJECT, AND THE TERMINATION OF RIGHTS UPON TERMINATION OF SERVICES.
IF THESE FILES ARE USED FOR ESTIMATING PURPOSES, THE FILES SHALL BE OFFICIAL AND GENERAL ARCHITECTURAL, STRUCTURAL, MECHANICAL, ELECTRICAL, AND PLUMBING (MEP) DRAWINGS AND SPECIFICATIONS ARE THE PROPERTY OF THE ARCHITECT AND PROFESSIONAL ENGINEER AND ARE NOT TO BE REPRODUCED, CHANGED OR COPIED IN ANY FORM OR MANNER WHATSOEVER, NOR ARE THEY TO BE ASSIGNED TO ANY THIRD PARTY, WITHOUT FIRST OBTAINING THE EXPRESS WRITTEN PERMISSION AND CONSENT OF THE ARCHITECT AND PROFESSIONAL ENGINEER.
IN ADDITION TO THE FOREGOING, ELECTRONIC FILES MAY NOT BE USED FOR ANY PURPOSE NOT SPECIFICALLY ASSOCIATED WITH THIS PROJECT IN ACCORDANCE WITH THE TERMS OF THE ARCHITECT AND PROFESSIONAL ENGINEER'S PROPOSAL, INCLUDING WITHOUT LIMITATION THE GENERAL DISTRIBUTION RESTRICTION, THE PROFESSIONAL SEAL REQUIREMENT, THE LIMITED LICENSE TO USE THE INSTRUMENTS OF SERVICE FOR THE PROJECT, AND THE TERMINATION OF RIGHTS UPON TERMINATION OF SERVICES.
VERIFY ALL ELECTRICAL AND MECHANICAL CONDITIONS AND DIMENSIONS PRIOR TO CONSTRUCTION. ANY DISCREPANCIES FOUND BETWEEN THE DRAWINGS AND EXISTING CONDITIONS SHALL BE REPORTED TO THE OWNER'S PROJECT MANAGER OR ARCHITECT BEFORE PROCEEDING WITH WORK. ARCHITECT AND ENGINEER ASSUME NO RESPONSIBILITY FOR ANY VARIANCE BETWEEN ACTUAL AND DRAWN CONDITIONS.

No.	Date	Revision Notes	Zone	Appr

No.	Date	Issue Notes
2	01/3/2024	release for bid
1	12/7/2023	permit subm

Date: TBD
Revision:
Project: 23703.culpeper
Drawing Code:
CAD File Name:
Plot Date:

Designed By:
Drawn By:
Checked By:
Reviewed By:
Technical By:
Project Manager:

Design Firm
NORMAN SMITH ARCHITECTURE
1341 H Street, Washington, DC 20002-4906
3637 Slate Mills Road, Sperryville, VA 22740
T 202.462.5888 www.normansmitharchitecture.com

Consultant
VALLEY ENGINEERING
4901 Crowe Drive, Mount Crawford, VA 22841
T 540.434.6365 www.valleyesp.com

Project Title
Culpeper County Community Pool Project
16388 Competition Drive
Culpeper, VA

Sheet Title
MECHANICAL DETAILS

Scale: NTS

Sheet No.: M500.2

of

COMMONWEALTH OF VIRGINIA
PHILLIP L. GENTRY
Lic. No. 025757
01/03/2024
PROFESSIONAL ENGINEER

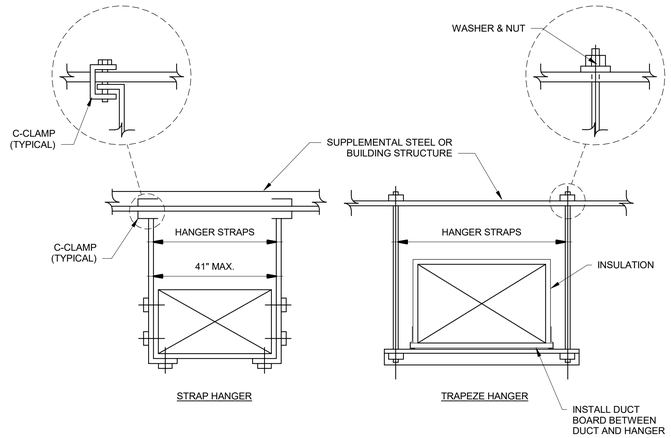

NOTES:
1. NO POP RIVETS ALLOWED, USE SELF-TAPPING SHEET METAL SCREWS ONLY.

DUCT SUPPORT DETAIL

NOT TO SCALE

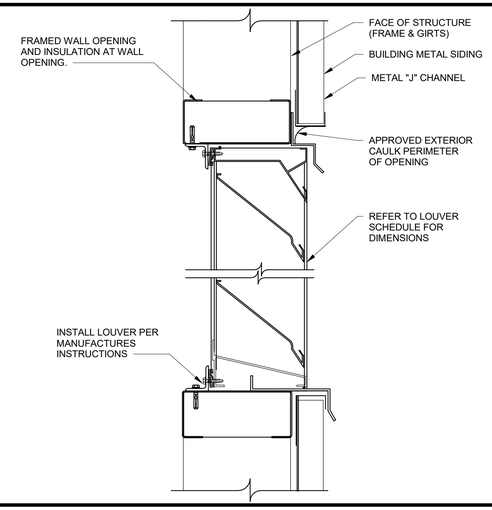

LOUVER DETAIL

NOT TO SCALE

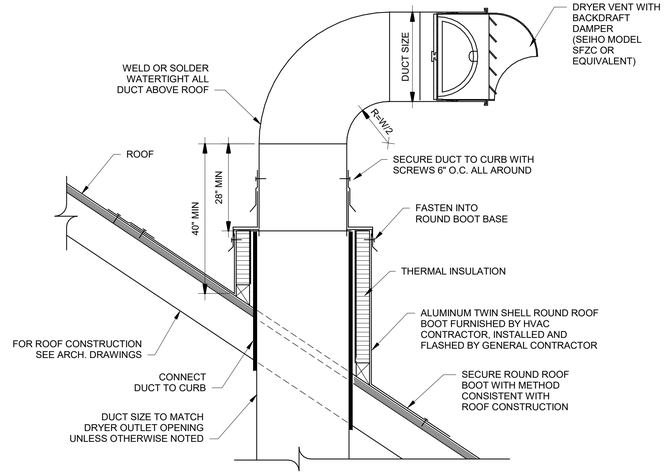

ROOF MOUNTED DRYER EXHAUST VENT DETAIL

NOT TO SCALE

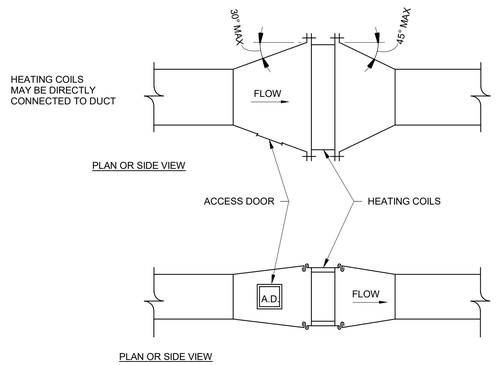

DUCT TRANSITION WITH EQUIPMENT IN DUCT

DUCT MOUNTED REMOTE HEATING COIL INSTALLATION DETAIL

NOT TO SCALE

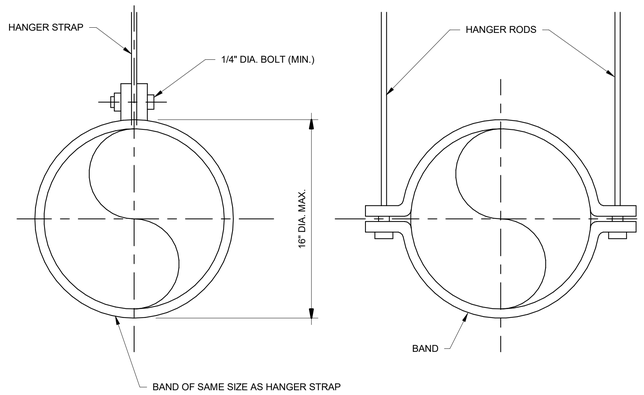

ROUND DUCT HANGERS

NOT TO SCALE

PLANS MADE BEFORE OFFICIAL ELECTRONIC FILES WERE PROVIDED:

DRAWINGS AND DESIGNS ©1983 NORMAN SMITH ARCHITECTURE.
DRAWINGS AND SPECIFICATIONS AND THE IDEAS DESIGNS AND ARRANGEMENTS REPRESENTED THEREIN ARE THE EXCLUSIVE PROPERTY OF THE ARCHITECT AND PROFESSIONAL ENGINEERS FOR THIS PROJECT. THEY ARE NOT TO BE USED BY ANYONE ON OTHER PROJECTS, FOR ADDITIONS TO THIS PROJECT, OR FOR COMPLETION OF THIS PROJECT BY OTHERS EXCEPT BY AGREEMENT IN WRITING AND WITH APPROPRIATE COMPENSATION TO THE ARCHITECT AND PROFESSIONAL ENGINEERS, THIS RESERVATION OF RIGHTS SHALL NOT BE DEEMED TO BE A WAIVER OF ANY RIGHTS ACCRUING TO THE ARCHITECT AND PROFESSIONAL ENGINEERS UNDER THE LAWS OF THE UNITED STATES OF AMERICA.

DRAWINGS AND SPECIFICATIONS ARE INTERDEPENDENT. ANY DISCREPANCY BETWEEN DRAWINGS AND SPECIFICATIONS SHALL BE REPORTED TO THE ARCHITECT AND ENGINEER FOR CLARIFICATION PRIOR TO BIDDING. THE CONTRACTOR IS RESPONSIBLE FOR ALL WORK INCLUDED IN THE CONTRACT DOCUMENTS, WHETHER SPECIFICALLY MODIFIED BY THE ARCHITECT OR NOT, UNLESS EXPRESSLY EXCLUDED.

VERIFY ALL DIMENSIONS AND CONDITIONS AT THE JOB SITE. DO NOT SCALE DRAWINGS. ADDITIONAL SITE CHANGE ORDERS AND OTHER DOCUMENTS MAY BE ISSUED BY THE ARCHITECT AND ENGINEER DURING CONSTRUCTION. VERIFY THAT THE LATEST ISSUED CONTRACT DOCUMENTS ARE BEING USED.

VERIFY ALL ELEVATIONS AND CONDITIONS PRIOR TO CONSTRUCTION. ALL DIMENSIONS TO BE VERIFIED BY CONTRACTOR PRIOR TO CONSTRUCTION. ANY DISCREPANCIES TO BE REPORTED TO THE OWNER'S PROJECT MANAGER OR ARCHITECT. ANY VARIANCE BETWEEN ACTUAL AND DRAWINGS TO BE REPORTED.

No.	Date	Issue Notes
3	02/19/2024	permit comment response
2	01/3/2024	release for bid
1	12/7/2023	permit subm

No.	Date	Revision Notes	Zone	Appr
4	3/29/24	rebid revisions		

Designed By: TBD
Drawn By: Revision
Checked By: Project 23703.culpeper
Reviewed By: Drawing Date
Submitted By: CAD File Name
Project Manager: Plot Date

Design Firm: NORMAN SMITH ARCHITECTURE
1341 H Street, Washington, DC 20002-4906
3637 Slate Mills Road, Sperryville, VA 22740
T 202.462.3888 www.normansmitharchitecture.com

Consultant: VALLEY ENGINEERING
4901 Crowe Drive, Mount Crawford, VA 22841
T 540.434.6385 www.valleyesp.com

Project Title: Culpeper County Community Pool Project
16388 Competition Drive
Culpeper, VA

Sheet Title: MECHANICAL DETAILS

Scale: NTS

Sheet No.: M500.3
of

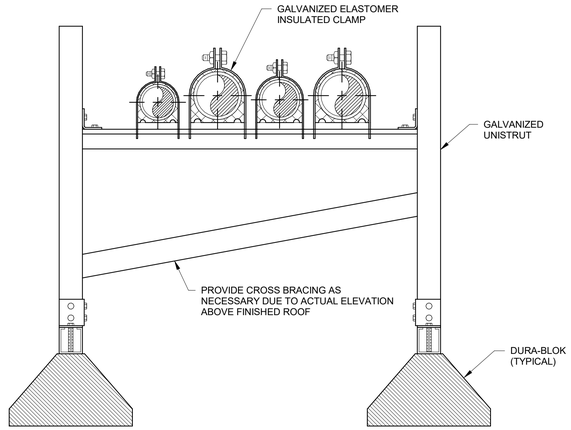

REFRIGERANT PIPING SUPPORT DETAIL

NOT TO SCALE

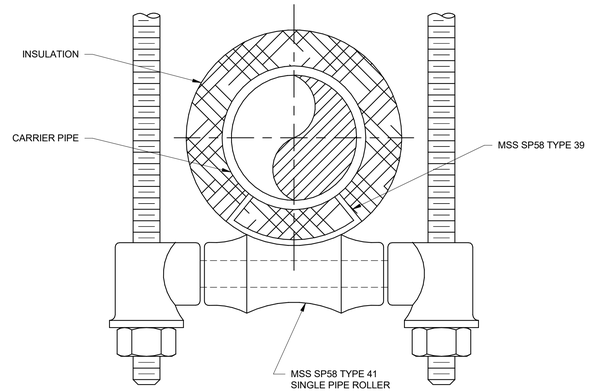

NOTES:
1. SIZE ROLLER TO ADEQUATELY SUPPORT LOAD.
2. SIZE STEEL PIPE COVERING PROTECTION SADDLE (TYPE 39) TO PIPE SIZE AND INSULATION THICKNESS.
3. USE INSULATION SHIELDS FOR COLD LINES AND PROTECTION SADDLES FOR HOT LINES.

ROLLER HANGER DETAIL FOR INSULATED PIPING

NOT TO SCALE

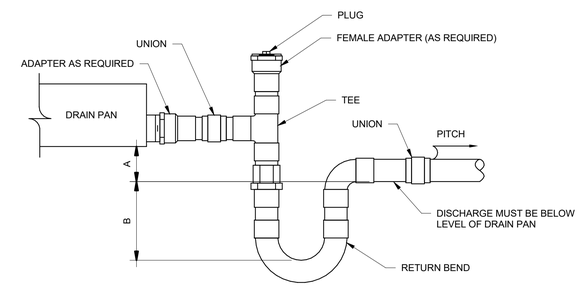

NOTES:
1. RECOMMENDED DEPTH:
   DRAW THRU UNITS:
   A = 1" OF LENGTH FOR EACH 1" OF NEGATIVE PRESSURE* PLUS 1" ADDITIONAL
   B = 1/2 x (A)
   *NEGATIVE PRESSURE = TOTAL UNIT STATIC PRESSURE AT WORST CASE (LOADED FILTERS)
   BLOW THRU UNITS:
   B = 1/2" PLUS TOTAL UNIT STATIC PRESSURE AT WORSE CASE (LOADED FILTERS)
   A = 1" MINIMUM DRIP REQUIRED. USE OF STANDARD FITTINGS SHOWN WILL EXCEED THIS MINIMUM.
2. ADD STRUCTURAL STEEL TO RAISE THE BOTTOM OF THE UNIT TO ACCOMMODATE TRAP HEIGHT.
3. PITCH DRAIN FOR PROPER RUN-OFF AND DISCHARGE TO APPROVED RECEPTACLE.
4. SUPPORT DRAIN LINES TO PREVENT SAG AND CONDENSATE OVERFLOW.
5. MANUALLY PRIME FILL TRAP BEFORE START-UP TO FORM INITIAL DRAIN SEAL.

DRAIN PAN INDOOR TRAP DETAIL

NOT TO SCALE

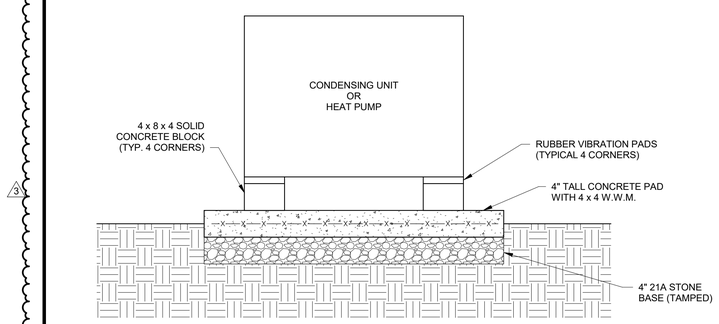

TYPICAL CONDENSING UNIT OR HEAT PUMP MOUNTING DETAIL

NOT TO SCALE

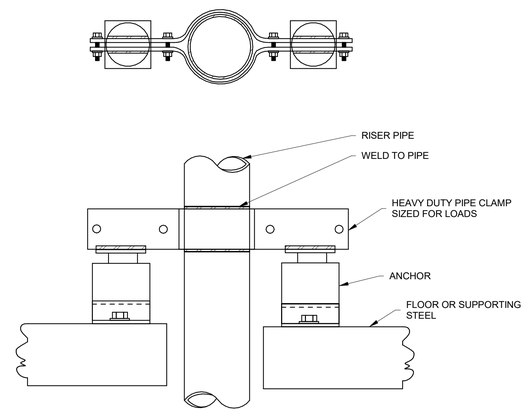

RISER ANCHOR DETAIL

NOT TO SCALE

PLEASE READ BEFORE OPENING ELECTRONIC FILES: NORM SMITH:
DRAWINGS AND DESIGN IS OWN NORMAN SMITH ARCHITECTURE.
DRAWINGS AND SPECIFICATIONS AND THE IDEAS DESIGNS AND ARRANGEMENTS REPRESENTED THEREIN ARE THE EXCLUSIVE PROPERTY OF THE ARCHITECT AND PERSONAL WITHOUT EXCEPTION, THE PROPERTY OF THE ARCHITECT AND SHALL NOT BE DISCLOSED TO OTHERS FOR ANY PURPOSE WITHOUT WRITTEN CONSENT OF THE ARCHITECT. THEY SHALL NOT BE REPRODUCED, CHANGED OR COPIED IN ANY FORM OR MANNER WHATSOEVER, NOR ARE THEY TO BE ASSIGNED TO ANY THIRD PARTY, WITHOUT FIRST OBTAINING THE WRITTEN PERMISSION AND CONSENT OF THE ARCHITECT. ALL RIGHTS OF THE ARCHITECT UNDER COPYRIGHT LAWS ARE RESERVED.
VERIFY ALL DIMENSIONS AND CONDITIONS PRIOR TO CONSTRUCTION. IF ANY DISCREPANCIES ARE FOUND, NOTIFY THE ARCHITECT IMMEDIATELY. DO NOT SCALE DRAWINGS.
SPECIFICATIONS, ADDENDA, RFIS, CHANGE ORDERS AND OTHER CONTRACT DOCUMENTS MAY ALSO HAVE BEEN MODIFIED BY ADDENDUM. VERIFY THAT THEY ARE CURRENT AND THAT YOUR DOCUMENTS ARE THE LATEST ISSUED.
VERIFY ALL ELEVATIONS AND FIELD CONDITIONS PRIOR TO CONTRACTING WITH OWNER'S PROJECT MANAGER OF ANY VARIANCE BETWEEN ACTUAL AND DRAWINGS/SPECS.
IF THERE EXISTS AN ISSUE OR ISSUES WHICH PREVENT PRIME PERFORMANCE, THE ELECTRICAL OR CONTRACTOR MUST NOTIFY THE ARCHITECT IMMEDIATELY. ALL ELECTRICAL WORK SHALL BE PERFORMED BY LICENSED ELECTRICIANS. ALL WORK SHALL BE PERFORMED IN ACCORDANCE WITH THE LATEST EDITION OF THE NATIONAL ELECTRICAL CODE AND ALL OTHER APPLICABLE CODES AND REGULATIONS. ALL MATERIALS SHALL BE NEW AND BEAR THE LABEL OF A NATIONALLY RECOGNIZED TESTING LABORATORY. ALL EQUIPMENT SHALL BE INSTALLED IN ACCORDANCE WITH THE MANUFACTURER'S RECOMMENDATIONS. ALL EQUIPMENT SHALL BE INSTALLED IN A NEAT AND WORKMANLIKE MANNER. ALL EQUIPMENT SHALL BE INSTALLED IN ACCESSIBLE LOCATIONS. ALL EQUIPMENT SHALL BE INSTALLED IN ACCORDANCE WITH THE MANUFACTURER'S INSTRUCTIONS. ALL EQUIPMENT SHALL BE INSTALLED IN ACCORDANCE WITH THE LATEST EDITION OF THE NATIONAL ELECTRICAL CODE AND ALL OTHER APPLICABLE CODES AND REGULATIONS. ALL MATERIALS SHALL BE NEW AND BEAR THE LABEL OF A NATIONALLY RECOGNIZED TESTING LABORATORY. ALL EQUIPMENT SHALL BE INSTALLED IN ACCORDANCE WITH THE MANUFACTURER'S INSTRUCTIONS. ALL EQUIPMENT SHALL BE INSTALLED IN ACCORDANCE WITH THE LATEST EDITION OF THE NATIONAL ELECTRICAL CODE AND ALL OTHER APPLICABLE CODES AND REGULATIONS. ALL MATERIALS SHALL BE NEW AND BEAR THE LABEL OF A NATIONALLY RECOGNIZED TESTING LABORATORY. ALL EQUIPMENT SHALL BE INSTALLED IN ACCESSIBLE LOCATIONS. ALL EQUIPMENT SHALL BE INSTALLED IN ACCORDANCE WITH THE MANUFACTURER'S INSTRUCTIONS. ALL EQUIPMENT SHALL BE INSTALLED IN ACCORDANCE WITH THE LATEST EDITION OF THE NATIONAL ELECTRICAL CODE AND ALL OTHER APPLICABLE CODES AND REGULATIONS.

No.	Date	Issue Notes
2	01/3/2024	release for bid
1	12/7/2023	permit subm

No.	Date	Revision Notes	Zone	Appr
3	3/29/24	rebid revisions		

Date: TBD
Revision:
Project: 23703.culpeper
Drawing Code:
CAD File Name:
Plot Date:

Designed By:
Drawn By:
Checked By:
Reviewed By:
Submitted By:
Project Manager:

Design Firm:
NORMAN SMITH ARCHITECTURE
1341 H Street, Washington, DC 20002-4906
3657 Slate Mills Road, Sperryville, VA 22740
T 202.462.3888 www.normansmitharchitecture.com

Consultant:
VALLEY ENGINEERING
44901 Crowe Drive, Mount Crawford, VA 22841
T 540.434.6365 www.valleyesp.com

Project Title:
Culpeper County
Community Pool Project
16388 Competition Drive
Culpeper, VA

Sheet Title:
MECHANICAL DETAILS

COMMONWEALTH OF VIRGINIA
PHILLIP L. GENTRY
Lic. No. 025757
03/29/2024
PROFESSIONAL ENGINEER

Scale: NTS

Sheet No:
M500.4
of

CIRCUIT DESCRIPTIONS - POWER

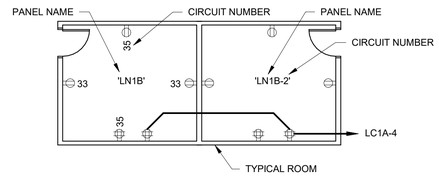

NOTES: CIRCUITING WILL BE SHOWN ON THE POWER PLANS WHERE A CIRCUIT PROVIDES POWER TO MULTIPLE ROOMS. CIRCUITING MAY NOT BE SHOWN WHERE A CIRCUIT PROVIDES POWER TO ONLY ONE ROOM AS SHOWN ABOVE.

CIRCUIT DESCRIPTIONS - LIGHTING

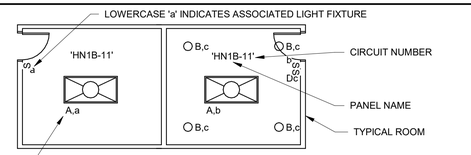

NOTES: CIRCUITING WILL BE SHOWN ON THE LIGHTING PLANS WHERE A CIRCUIT PROVIDES POWER TO WHITE LIGHT OR LIFE SAFETY POWER FIXTURES THAT ARE LOCATED THROUGHOUT THE ENTIRE SPACE. CIRCUITING MAY NOT BE SHOWN WHERE A CIRCUIT PROVIDES POWER TO FIXTURES WITHIN ROOMS ADJACENT TO EACH OTHER AS SHOWN ABOVE.

GENERAL LEGEND

J	CEILING OR WALL MOUNTED JUNCTION BOX
	MOTOR CONNECTION
	HEAVY DUTY SAFETY SWITCH
	PANELBOARD (FLUSH OR SURFACE MOUNTED)
	BRANCH CIRCUIT WIRING
	BRANCH CIRCUIT HOMERUN
	GROUND

NOTES: ALL MOUNTING HEIGHTS SHALL BE AS INDICATED IN THE LEGENDS OR INDICATED ON THE FLOOR PLANS. HEIGHT INDICATED ON FLOOR PLANS TAKE PRESIDNECE. (HEIGHT INDICATED IS TO CENTER OF THE DEVICE ABOVE FINSISHED FLOOR).

ALL DEVICES SHALL BE RECESSED MOUNTED FLUSH IN THE WALL, CEILING, OR FLOOR UNLESS OTHERWISE NOTED.

POWER AND COMMUNICATIONS LEGEND

	DUPLEX RECEPTACLE (+18")
	DOUBLE DUPLEX RECEPTACLE (+18")
	SPECIAL NEMA RECEPTACLE (HEIGHT AND NEMA CONFIGURATION AS INDICATED ON THE FLOOR PLANS)
LP-5 C,G +48"	PANEL NAME AND CIRCUIT NUMBER DESCRIPTIONS: C - MOUNTED 8" ABOVE COUNTER G - GROUND FAULT CIRCUIT INTERRUPTER RECEPTACLE K - CLOCK HANGER RECEPTACLE R - CORD REEL RECEPTACLE T - TAMPER RESISTANT RECEPTACLE U - RECEPTACLE WITH BUILT-IN TYPE-A AND TYPE-C USB CHARGER W - WEATHERPROOF RECEPTACLE MOUNTING HEIGHT
	DATA WALL OUTLET (+18") 1-GANG JUNCTION BOX AND 1-GANG PLASTER RING WITH ONE (1) 3/4" EMPTY CONDUIT WITH PULL STRING STUBBED INTO ACCESSIBLE CEILING SPACE
SP	CEILING OR WALL MOUNTED SPEAKER (+18" FOR WALL MOUNTED SPEAKER OUTLET) 1-GANG JUNCTION BOX AND 1-GANG PLASTER RING WITH ONE (1) 3/4" EMPTY CONDUIT WITH PULL STRING STUBBED INTO ACCESSIBLE CEILING SPACE
TV	CEILING OR WALL MOUNTED TELEVISION OUTLET (+18" FOR WALL MOUNTED TELEVISION OUTLET) 1-GANG JUNCTION BOX AND 1-GANG PLASTER RING WITH ONE (1) 3/4" EMPTY CONDUIT WITH PULL STRING STUBBED INTO ACCESSIBLE CEILING SPACE
	EMERGENCY POWER OFF (EPO) BUTTON, STI SERIES 2000 MODEL #SS-2-2-0-1-E (+48")

LIGHTING LEGEND

	2'x4' LIGHT FIXTURE
	2'x2' LIGHT FIXTURE
	STRIP LIGHT FIXTURE
	WALL MOUNTED LIGHT FIXTURE (HEIGHT AS INDICATED IN THE LIGHTING FIXTURE SCHEDULE OR ON THE FLOOR PLANS)
	DOWNLIGHT
	CEILING OR WALL MOUNTED EXIT LIGHT (NUMBER OF FACES AND DIRECTIONAL ARROWS AS INDICATED ON THE FLOOR PLANS)
	EMERGENCY LIGHT FIXTURE
	LIGHT FIXTURE PROVIDED WITH EMERGENCY BATTERY DRIVER
A,a	UPPERCASE 'A' INDICATES LIGHT FIXTURE TYPE (SEE THE LIGHTING FIXTURE SCHEDULE) LOWERCASE 'a' INDICATES ASSOCIATED SWITCHING
$	SINGLE POLE SWITCH (+48")
$ 3	THREE-WAY SWITCH (+48")
$ OS	WALL MOUNTED DUAL TECHNOLOGY AUTOMATIC WALL SWITCH OCCUPANCY SENSOR (+48")
$ D	SINGLE POLE DIMMER SWITCH (+48")
$ 3D	THREE-WAY DIMMER SWITCH (+48")
$ K	KEY SWITCH (+48")
$ a	LOWERCASE 'a' INDICATES ASSOCIATED LIGHT FIXTURE(S)
OS a	CEILING MOUNTED LINE-VOLTAGE DUAL TECHNOLOGY OCCUPANCY SENSOR, LOWERCASE 'a' INDICATES ASSOCIATED LIGHT FIXTURE(S)
OS L a	CEILING MOUNTED LOW-VOLTAGE DUAL TECHNOLOGY OCCUPANCY SENSOR, LOWERCASE 'a' INDICATES ASSOCIATED LIGHT FIXTURE(S)
PP a	POWER PACK ABOVE CEILING FOR LOW-VOLTAGE OCCUPANCY SENSORS, LOWERCASE 'a' INDICATES ASSOCIATED LIGHT FIXTURE(S)

FIRE SAFETY LEGEND

F W xx	WALL MOUNTED FIRE ALARM AUDIO/VISUAL SIGNALING DEVICE (+80" TO BOTTOM OF DEVICE OR 6" BELOW FINISHED CEILING, WHICHEVER IS LOWER) xx=CANDELA SETING W=WEATHERPROOF DEVICE
F	FIRE ALARM PULL STATION (+48")
FACP	FIRE ALARM CONTROL PANEL
FAAP	FIRE ALARM ANNUNCIATOR PANEL

SECURITY LEGEND

SC	CEILING OR WALL MOUNTED SECURITY CAMERA (8" BELOW FINISHED CEILING FOR WALL MOUNTED SECURITY CAMERA) 2-GANG JUNCTION BOX AND 1-GANG PLASTER RING WITH ONE (1) 3/4" EMPTY CONDUIT WITH PULL STRING STUBBED INTO ACCESSIBLE CEIILNG SPACE

MPE DESIGN SUMMARY

PROJECT INFORMATION

PROJECT NAME:	CULPEPER COMMUNITY POOL
ADDRESS:	16388 COMPETITION DRIVE CULPEPER, VA
PROPOSED USE:	ASSEMBLY GROUP A-5
OWNER:	CULPEPER COUNTY
OWNER CONTACT:	ANDREW HARDY
VE PROJ NO.:	12992-9

APPLICABLE CODES

BUILDING CODE:	VIRGINIA CONSTRUCTION CODE: 2018
MECHANICAL CODE:	VIRGINIA MECHANICAL CODE: 2018
PLUMBING CODE:	VIRGINIA PLUMBING CODE: 2018
ELECTRICAL CODE:	NFPA 70 NATIONAL ELECTRICAL CODE: 2017
FIRE ALARM CODE:	VIRGINIA STATEWIDE FIRE PREVENTION CODE: 2018
LIFE SAFETY CODE:	NFPA 101 LIFE SAFETY CODE: 2018
ACCESSIBILITY CODE:	ICC/ANSI A117.1 STANDARDS ON ACCESSIBLE AND USABLE BUILDING AND FACILITIES: 2009
ENERGY CODE:	ASHRAE/IESNA 90.1-2016 ENERGY STANDARD FOR BUILDINGS EXCEPT LOW-RISE RESIDENTIAL BUILDINGS VIRGINIA ENERGY CONSERVATION CODE: 2018
GAS CODE:	VIRGINIA FUEL GAS CODE: 2018
POOL CODE:	VIRGINIA SWIMMING POOL AND SPA CODE: 2018

PROJECT TEAM

PROJECT MANAGER:	JASON DAMICO
PROJECT TEAM:	
MECHANICAL ENGINEER	CHRIS PERRIN
PLUMBING ENGINEER	MATT SHOCKEY
ELECTRICAL ENGINEER	JASON DAMICO
REVIT/CAD PROJECT LEAD	TIM HOUSDEN

DRAWING LIST

E000.1	ELECTRICAL LEGENDS
E000.2	ELECTRICAL ABBREVIATIONS AND NOTES
E000.3	ELECTRICAL SPECIFICATIONS
E000.4	ELECTRICAL SCHEDULES
E100.0	ELECTRICAL OVERALL PLAN
E100.1	ELECTRICAL POWER PLAN - AREA 'A'
E100.2	ELECTRICAL POWER PLAN - AREA 'B'
E100.3	ELECTRICAL POWER PLAN - AREA 'C'
E200.1	ELECTRICAL LIGHTING PLAN - AREA 'A'
E200.2	ELECTRICAL LIGHTING PLAN - AREA 'B'
E200.3	ELECTRICAL LIGHTING PLAN - AREA 'C'
E400.1	ELECTRICAL ONE-LINE DIAGRAM
E500.1	ELECTRICAL DETAILS
E500.2	ELECTRICAL DETAILS
E600.1	ELECTRICAL SITE PLAN

COMMONWEALTH OF VIRGINIA
JASON P. DAMICO
Lic. No. 048680
01/03/2024
PROFESSIONAL ENGINEER

PLEASE READ BEFORE OPENING ELECTRONIC FILES: NORM PACKARD

DRAWINGS AND DESIGN IS ©2023 NORMAN SMITH ARCHITECTURE. DRAWINGS AND SPECIFICATIONS AND THE IDEAS DESIGNS AND ARRANGEMENTS REPRESENTED THEREIN ARE THE PROPERTY OF THE ARCHITECT AND THE PROFESSIONAL ENGINEERS AND WERE CREATED, EVOLVED AND DEVELOPED FOR USE ON AND IN CONNECTION WITH THE SPECIFIED PROJECT. NONE OF THE FOREGOING MATERIALS MAY BE DUPLICATED, DISCLOSED OR COMMUNICATED WITHOUT THE WRITTEN CONSENT OF THE ARCHITECT OR THE PROFESSIONAL ENGINEERS. NO PROPRIETARY INTEREST IN THE MATERIALS HAS BEEN TRANSFERRED TO OWNER OR ANY OTHER PARTY. ALL RIGHTS ARE RESERVED. UNDER THE FEDERAL COPYRIGHT ACT, ©2023 NORMAN SMITH ARCHITECTURE, VALLEY ENGINEERING AND THE PROFESSIONAL ENGINEERS. OWNER'S RIGHT TO REPRODUCE, DISTRIBUTE AND USE THE DRAWINGS AND SPECIFICATIONS IS LIMITED TO THE PURPOSES AND PROJECT SPECIFIED IN THE AGREEMENT BETWEEN OWNER AND ARCHITECT. ANY OTHER USE OR REPRODUCTION WITHOUT THE WRITTEN CONSENT OF ARCHITECT IS PROHIBITED.

IF THESE FILES ARE USED TO VIEW PLANS OR OTHER PROJECT DRAWINGS, THE FILES SHALL BE OPERATING AND VIEWED ON A COMPUTER WITH A LICENSED COPY OF AUTODESK VIEWER OR AUTOCAD. THE PLANS AND OTHER DRAWINGS MAY NOT BE VIEWABLE ON OTHER COMPUTER PROGRAMS OR WITHOUT THE LATEST UPDATES AND SERVICE PACKS INSTALLED. THE ARCHITECT AND ENGINEERS DO NOT WARRANT THAT THE DRAWINGS WILL BE VIEWABLE ON ANY COMPUTER OTHER THAN A COMPUTER OPERATING AUTODESK VIEWER OR AUTOCAD. THE ARCHITECT AND ENGINEERS ARE NOT RESPONSIBLE FOR ANY REQUIREMENTS OF THE VIEWING SOFTWARE PROVIDED.

THE ARCHITECT AND ENGINEERS DO NOT WARRANT THAT THE DRAWINGS ARE COMPATIBLE WITH ANY PHONING HOME LICENSE AUTHORIZATION SOFTWARE OR OTHER SOFTWARE OR EQUIPMENT WHICH MAY BE REQUIRED BY THE VIEWING SOFTWARE PROVIDED.

THE ARCHITECT AND ENGINEERS DO NOT WARRANT THAT THE DRAWINGS ARE COMPATIBLE WITH ANY OWNER'S PROJECT MANAGER OR OTHER SOFTWARE OR EQUIPMENT. THE ARCHITECT AND ENGINEERS ARE NOT RESPONSIBLE FOR ANY VARIANCE BETWEEN PICTURES AND DRAWINGS.

No.	Date	Issue Notes	Zone	Appr
2	01/3/2024	release for bid		
1	12/7/2023	permit subm		

No.	Date	Revision

Designed By
Drawn By
Checked By
Reviewed By
Submitted By
Project Manager
Date
Project 23703.culpeper
Drawing Code
CAD File Name
Plot Date

Design firm
NORMAN SMITH ARCHITECTURE
1341 H Street, Washington, DC 20002-4906
3637 State Mills Road, Sperryville, VA 22740
T 202.462.5888 www.normansmitharchitecture.com

Consultant
VALLEY ENGINEERING
4901 Crowe Drive, Mount Crawford, VA 22841
T 540.434.6365 www.valleyesp.com

Project Title
Culpeper County Community Pool Project
16388 Competition Drive
Culpeper, VA

Sheet Title
ELECTRICAL LEGENDS

Scale
NTS

Sheet No.
E000.1
of

GENERAL ELECTRICAL NOTES

1. ALL WORK SHALL CONFORM TO THE REGULATIONS OF APPLICABLE FEDERAL, STATE, AND LOCAL LAWS, ORDINANCES, AND CODES. ELECTRICAL WORK SHALL BE PERFORMED IN ACCORDANCE WITH THE LATEST ADOPTED CODES AND OF THE AUTHORITY HAVING JURISDICTION.
2. DRAWINGS ARE CONSIDERED DIAGRAMMATIC AND INDICATE A GENERAL ARRANGEMENT OF WORK. REFER TO THE ARCHITECTURAL DRAWINGS FOR COORDINATION AND EXACT EQUIPMENT LOCATIONS.
3. CONTRACTOR SHALL OBTAIN AND PAY FOR ALL PERMITS AND ASSOCIATED FEES AND TAXES.
4. PROVIDE ALL MATERIAL AND EQUIPMENT NOT INDICATED AS EXISTING TO REMAIN IN THE CONTRACT DOCUMENTS.
5. PROVIDE ALL SCAFFOLDING, RIGGING, HOISTING, AND SERVICES NECESSARY FOR ERECTION AND DELIVERY OF ANY EQUIPMENT.
6. INSTALL ALL WORK IN A NEAT AND WORKMANLIKE MANNER. INSTALL ALL NEW WORK WITH MINIMUM INTERFERENCE TO EXISTING SYSTEMS.
7. MAINTAIN A CLEAN WORK AREA AT ALL TIMES DURING CONSTRUCTION.
8. DO NOT CUT STRUCTURAL MEMBERS OR SUPPORTS WITHOUT THE APPROVAL OF THE ARCHITECT AND STRUCTURAL ENGINEER.
9. PROVIDE A MINIMUM ONE YEAR WARRANTY TO COVER ALL MATERIALS, EQUIPMENT, AND LABOR. WARRANTY SHALL START AFTER FINAL ACCEPTANCE BY THE OWNER AND IT SHALL COVER COSTS ASSOCIATED WITH ANY REPAIRS OR REPLACEMENTS CAUSED BY DEFECTIVE WORKMANSHIP OR FAULTY MATERIALS OR EQUIPMENT.
10. TEST ALL SYSTEMS AFTER INSTALLATION. SYSTEMS SHALL OPERATE AS DESIGNED AND INTENDED.
11. PROVIDE DEDICATED NEUTRALS FOR ALL CIRCUITS.
12. ALL DEVICES SHALL BE RECESSED MOUNTED FLUSH IN THE WALL, FLOOR, OR CEILING UNLESS OTHERWISE NOTED.
13. ALL MOUNTING HEIGHTS ARE INDICATED WITHIN THE LEGENDS UNLESS OTHERWISE INDICATED ON THE FLOOR PLANS.
14. PROJECT REPORTING:
    - 14.1.1. DURING CONSTRUCTION, THE CONTRACTOR SHALL KEEP AN ACCURATE RECORD OF ALL DEVIATIONS IN THE WORK BETWEEN THAT SHOWN ON THE DRAWINGS AND SPECIFICATIONS AND ITS ACTUAL INSTALLATION.
    - 14.1.2. THROUGHOUT THE PROGRESS OF THE WORK, THE CONTRACTOR SHALL MAINTAIN AT THE SITE, ONE RECORD COPY OF ALL DRAWINGS, SPECIFICATIONS, ADDENDA, RFI'S, CHANGE ORDERS, SHOP DRAWINGS, AND SUBMITTALS, MARKED CURRENTLY TO RECORD ALL CHANGES AND DEVIATIONS MADE DURING CONSTRUCTION. THIS SET SHALL THOROUGHLY INDICATE ALL FIELD CHANGES, MINOR AND OTHERWISE, SO THAT THE OWNER IS PROVIDED A COMPLETE RECORD OF THE ACTUAL BUILT CONDITIONS OF THE PROJECT.
    - 14.1.2.1. THE AS-BUILT DRAWINGS SHALL REFLECT THE ACTUAL INSTALLED CONDITIONS AND SHALL BE NEATLY AND ACCURATELY DRAWN TO SCALE TO MATCH THE DRAFTING OF THE CONSTRUCTION DOCUMENTS. THE AS-BUILT DRAWINGS SHALL BE PROVIDED IN A DIGITAL PDF FILE FORMAT.
    - 14.1.2.2. SUBJECT TO THE OWNER'S PRIOR APPROVAL, THE AS-BUILT DRAWINGS MAY BE A NEATLY ANNOTATED, HARD-COPY DRAWING SET THAT IS SCANNED TO A PDF DIGITAL FORMAT.
    - 14.1.2.3. SUBMIT ALL RECORD DOCUMENTS TO THE OWNER AND ARCHITECT AT THE COMPLETION OF THE WORK AS PART OF THE PROJECT CLOSE-OUT PROCESS.
    - 14.1.2.4. AS-BUILT REQUIREMENTS IN THIS SECTION TAKE PRECEDENCE OVER THOSE OF OTHER DRAWINGS/SECTIONS UNLESS OTHERWISE SPECIFICALLY NOTED.
15. SUBMITTALS:
    1. REFER TO THE ARCHITECTURAL DIVISION 00 AND 01 SPECIFICATIONS FOR ADDITIONAL SUBMITTAL REQUIREMENTS AND PROCESSES.
    2. THE CONTRACTOR SHALL SUBMIT INFORMATION TO THE OWNER DEMONSTRATING COMPLIANCE OF PRODUCTS AND INSTALLATION OF DRAWINGS AND SPECIFICATIONS. THIS INFORMATION SHALL INCLUDE BUT NOT LIMITED TO: CATALOG DATA, PERFORMANCE DATA, ELECTRICAL REQUIREMENTS INCLUDING OVER CURRENT PROTECTION DATA, PRODUCT DIMENSIONS, SPECIAL INSTALLATION REQUIREMENTS, AND RECOMMENDED CLEARANCES.
    3. RESUBMISSION: CONTRACTOR SHALL CHANGE OR CORRECT SUBMITTALS AS REQUIRED BY THE OWNER AND RESUBMIT UNTIL APPROVED. THE CONTRACTOR SHALL ALSO INDICATE ANY CHANGES WHICH HAVE BEEN MADE OTHER THAN THOSE REQUESTED BY THE OWNER OR ENGINEER.

ELECTRICAL ABBREVIATIONS

A	AMPERE	KW	KILOWATT
AFC	ABOVE FINISHED CEILING	LFMC	LIQUIDTIGHT FLEXIBLE METAL CONDUIT
AFF	ABOVE FINISHED FLOOR	LFNC	LIQUIDTIGHT FLEXIBLE NONMETALLIC CONDUIT
AFG	ABOVE FINISHED GRADE	LV	LOW VOLTAGE
AHU	AIR HANDLING UNIT	MAX	MAXIMUM
AIC	AMPERE INTERRUPTING CAPACITY	MC	METAL-CLAB CABLE
AMP	AMPERE	MCA	MINIMUM CIRCUIT AMPACITY
ARCH	ARCHITECT/ARCHITECTURAL	MCB	MAIN CIRCUIT BREAKER
ATS	AUTOMATIC TRANSFER SWITCH	MCC	MOTOR CONTROL CENTER
AWG	AMERICAN WIRE GAUGE	MIN	MINIMUM
BFC	BELOW FINISHED CEILING	MISC	MISCELLANEOUS
BRK	BREAKER	MLO	MAIN LUG ONLY
CIRC	CIRCUIT	MOCP	MAXIMUM OVER CURRENT PROTECTION
CLG	CEILING	MTS	MANUAL TRANSFER SWITCH
CCTV	CLOSED CIRCUIT TELEVISION	NEC	NATIONAL ELECTRIC CODE
CU	CONDENSING UNIT	NEMA	NATIONAL ELECTRICAL MANUFACTURERS ASSOCIATION
CORR	CORRIDOR		
CT	CURRENT TRANSFORMER/COOLING TOWER	NFSS	NON-FUSED SAFETY SWITCH
CUH	CABINET UNIT HEATER	NTS	NOT TO SCALE
DEMO	DEMOLITION	#	NUMBER
DISC	DISCONNECT	OCPD	OVER CURRENT PROTECTION DEVICE
DIST	DISTRIBUTION	P	POLE
DS	DISCONNECT SWITCH	PDU	POWER DISTRIBUTION UNIT
DWG	DRAWING	PF	POWER FACTOR
EC	ELECTRICAL CONTRACTOR	PFF	PROVISION FOR FUTURE
EF	EXHAUST FAN	PH	PHASE
EGC	EQUIPMENT GROUNDING CONDUCTOR	PNL	PANEL
ELEC	ELECTRIC/ELECTRICAL	PSI	POUNDS PER SQUARE INCH
EM	EMERGENCY	PVC	RIGID POLYVINYL CHLORIDE CONDUIT
EMT	ELECTRICAL METALLIC TUBING	PWR	POWER
ENT	ELECTRICAL NONMETALLIC TUBING	Ø	PHASE
EPO	EMERGENCY POWER OFF	RIF	RADIO INTERFERENCE FILTER
ETR	EXISTING TO REMAIN	RLA	RUNNING LOAD AMPS
EWC	ELECTRIC WATER COOLER	RM	ROOM
EWH	ELECTRIC WATER HEATER	RMC	RIGID METAL CONDUIT
EX	EXISTING	RTU	ROOF TOP UNIT
FACP	FIRE ALARM CONTROL PANEL	SPEC	SPECIFICATION
FAAP	FIRE ALARM ANNUNCIATOR PANEL	SS	SURGE SUPPRESSION
FLA	FULL LOAD AMPS	SW	SWITCH
FSS	FUSED SAFETY SWITCH	SWBD	SWITCHBOARD
FT	FOOT	SWGR	SWITCHGEAR
GC	GENERAL CONTRACTOR	SYS	SYSTEM
GEC	GROUNDING ELECTRODE CONDUCTOR	TELE	TELEPHONE
GEN	GENERATOR	TEMP	TEMPERATURE
GFI	GROUND FAULT INTERRUPTER	TV	TELEVISION
GND	GROUND	TVSS	TRANSIENT VOLTAGE SURGE SUPPRESSER
HD	HEAVY DUTY	TYP	TYPICAL
HID	HIGH INTENSITY DISCHARGE	UH	UNIT HEATER
HOA	HAND OFF AUTO	UL	UNDERWRITERS LABORATORY
HP	HORSEPOWER	UON	UNLESS OTHERWISE NOTED
HVAC	HEATING, VENTILATING, AND AIR CONDITIONING	UPS	UNINTERRUPTIBLE POWER SUPPLY
HZ	HERTZ	V	VOLT
IG	ISOLATED GROUND	VA	VOLT AMPERE
IMC	INTERMEDIATE METAL CONDUIT	VAV	VARIABLE AIR VOLUME
JB	JUNCTION BOX	VFD	VARIABLE FREQUENCY DRIVE
KO	KNOCK OUT	W	WATT/WEATHER PROOF
KVA	KILOVOLT-AMPERE	WP	WEATHERPROOF

CEILING COORDINATION NOTES

1. INSTALLATION OF ALL CEILING UTILITIES SHALL BE COORDINATED WITH ALL TRADES AND WITH STEEL PENETRATIONS.
2. CONFLICTS BETWEEN TRADES SHALL BE RESOLVED USING THE FOLLOWING PRIORITIZATION:
   - a. HVAC DUCTWORK MAINS
   - b. STORM PIPING
   - c. HVAC BRANCH DUCTS
   - d. HWS/HWR PIPING
   - e. DCW/DHW/DHWR PIPING
   - f. VENT PIPING
   - g. CONDUIT
3. REGISTERS, GRILLES, AND DIFFUSERS SHALL NOT BE RELOCATED WITHOUT APPROVAL OF MECHANICAL ENGINEER AND ARCHITECT.
4. LIGHTS SHALL NOT BE RELOCATED WITHOUT APPROVAL OF THE ELECTRICAL ENGINEER AND ARCHITECT.

COMMONWEALTH OF VIRGINIA
JASON P. DAMICO
Lic. No. 048680
01/03/2024
PROFESSIONAL ENGINEER

PLEASE READ BEFORE OPENING ELECTRONIC FILES: NORM SMITH:

DRAWINGS AND DESIGN IS ORIGINAL WORK OF NORMAN SMITH ARCHITECTURE. DRAWINGS AND SPECIFICATIONS AND THE IDEAS DESIGNS AND ARRANGEMENTS REPRESENTED THEREIN ARE THE EXCLUSIVE PROPERTY OF THE ARCHITECT AND PRIMA, WITHOUT EXCEPTION, THE PROPERTY OF THE ARCHITECT AND PRIMA, WITHOUT EXCEPTION, WERE PREPARED FOR THE USE OF THE OWNER OF THE PROJECT AND MAY NOT BE USED FOR ANY OTHER PROJECT BY THE OWNER OR CONTRACT BIDDER PLACING IT IN HIS OR HER HANDS. NEITHER THE OWNER NOR ANY OTHER PERSON OR ENTITY MAY MODIFY OR ALLOW TO BE MODIFIED THE DRAWINGS OR SPECIFICATIONS WITHOUT THE WRITTEN CONSENT OF THE ARCHITECT.

VERIFY THAT THEY ARE IDENTICAL OF THE CORRECT AND CURRENT DOCUMENTS BEFORE USING. THE ARCHITECT ASSUMES NO RESPONSIBILITY FOR DOCUMENTS THAT ARE NOT THE ORIGINAL OF THE CORRECT AND CURRENT SPECIFICATIONS, ADDENDA, RFI'S, CHANGE ORDERS AND OTHER MODIFICATIONS, WHICH MAY NOT BE REFLECTED IN THE DOCUMENTS PROVIDED.

VERIFY ALL ELETRIC AND FIELD COORDINATION REQUIRED FOR CONNECTING IN TTH OWNER'S PROJECT MANAGER OF ANY VARIANCE BETWEEN ACTUAL AND DRAWINGS/SPECS.

IF THERE EXISTS AN ISSUE OR ERROR IN ANY OF THESE DRAWINGS, THE ISSUE SHALL BE REPORTED TO THE ARCHITECT IMMEDIATELY. IF THE ARCHITECT IS NOT NOTIFIED OF ANY ISSUES OR ERRORS, THE ARCHITECT ASSUMES NO RESPONSIBILITY FOR THE ISSUE OR ERROR AND THE ARCHITECT SHALL BE HELD HARMLESS FOR ANY ISSUES OR ERRORS THAT ARE NOT REPORTED TO THE ARCHITECT IMMEDIATELY.

ALL DRAWINGS, SPECIFICATIONS, AND INSTRUMENTS OF SERVICE ARE THE PROPERTY OF THE ARCHITECT REGARDLESS OF THE CAUSE OF TERMINATION OF THE AGREEMENT BETWEEN THE OWNER AND THE ARCHITECT. THE ARCHITECT RETAINS ALL COMMON LAW, STATUTORY AND OTHER RESERVED RIGHTS, INCLUDING THE COPYRIGHT THERETO.

ANY PROVIDING CODE COMPLIANCE INFORMATION IS FOR THE REQUIREMENTS OF THE ARCHITECTURAL DISCIPLINE ONLY. ADDITIONAL CODE REQUIREMENTS MAY BE REQUIRED FOR OTHER DISCIPLINES. THE ARCHITECT ASSUMES NO RESPONSIBILITY FOR ANY CODE REQUIREMENTS NOT DIRECTLY RELATED TO THE ARCHITECTURAL DISCIPLINE.

THE ARCHITECT ASSUMES NO RESPONSIBILITY FOR ANY ADDITIONAL ABOVE DEFICIENCIES NECESSARY TO COMPLY WITH THE CODES, RULES AND REGULATIONS OF THE AUTHORITY HAVING JURISDICTION.

No.	Date	Revision Notes	Zone	Appr

No.	Date	Issue Notes
2	01/3/2024	release for bid
1	12/7/2023	permit subm

Designed By | Date | Reviewed By | Drawn By | Checked By | Project 23703.culpeper | Drawing Code | Reviewed By | CAD File Name | Submitted By | Project Manager | Plot Date

Design Firm
NORMAN SMITH ARCHITECTURE
1341 H Street, Washington, DC 20002-4806
3637 State Mills Road, Sperryville, VA 22740
T 202.462.5886 www.normansmitharchitecture.com

Consultant
VALLEY ENGINEERING
4901 Crowe Drive, Mount Crawford, VA 22841
T 540.434.6365 www.valleyesp.com

Project Title
Culpeper County
Community Pool Project
16388 Competition Drive
Culpeper, VA

Sheet Title
ELECTRICAL
ABBREVIATIONS AND
NOTES

Scale
NTS

Sheet No.
E000.2
of

1. GENERAL

1.A. VOLTAGE CHARACTERISTICS:

1.A.1. OPERATING VOLTAGE CHARACTERISTICS SHALL BE 120/208V, 1Ø AND/OR 3Ø, 3 WIRE AND/OR 4 WIRE, WITH A GROUNDED NEUTRAL, AND 60 HERTZ. VERIFY EXACT REQUIREMENTS WITH ALL EQUIPMENT.

1.B. COORDINATION:

1.B.1. COORDINATE ARRANGEMENT, MOUNTING, AND SUPPORT OF ELECTRICAL EQUIPMENT TO ALLOW MAXIMUM POSSIBLE HEADROOM UNLESS SPECIFIC MOUNTING HEIGHTS THAT REDUCE HEADROOM ARE INDICATED, TO PROVIDE EASE OF DISCONNECTING THE EQUIPMENT WITH MINIMUM INTERFERENCE TO OTHER INSTALLATIONS, TO ALLOW RIGHT OF WAY FOR PIPING, DUCTWORK, AND OTHER SYSTEMS REQUIRING SLOPE AND RIGHT OF WAY INSTALLATION, AND SO CONNECTING RACEWAYS, CABLES, WIREWAYS, CABLE TRAYS, AND BUSWAYS WILL BE CLEAR OF OBSTRUCTIONS AND OF THE WORKING AND ACCESS SPACE OF OTHER EQUIPMENT.

1.B.2. COORDINATE INSTALLATION OF REQUIRED SUPPORTING DEVICES AND SET SLEEVES IN CAST-IN-PLACE CONCRETE, MASONRY WALLS, AND OTHER STRUCTURAL COMPONENTS AS THEY ARE CONSTRUCTED.

1.B.3. PROVIDE AND COORDINATE THE LOCATION OF ACCESS PANELS AND DOORS FOR ELECTRICAL ITEMS THAT ARE BEHIND FINISHED SURFACES OR OTHERWISE CONCEALED.

2. CONDUCTORS, RACEWAYS, AND BOXES:

2.A. CONDUCTORS:

2.A.1. ALL CONDUCTORS SHALL BE COPPER. CONDUCTORS SHALL BE SOLID FOR #10AWG AND SMALLER AND STRANDED FOR #8AWG AND LARGER. MINIMUM CONDUCTOR SIZE SHALL BE #12AWG.
2.A.2. CONDUCTOR INSULATION SHALL BE THHN-THWN.
2.A.3. CONDUCTORS FOR FEEDERS AND BRANCH CIRCUITS SHALL BE SINGLE CONDUCTORS IN A RACEWAY.
2.A.4. CONDUCTORS AT DEVICES AND EQUIPMENT SHALL BE PROVIDED WITH ADEQUATE SLACK TO MAKE FINAL CONNECTIONS.
2.A.5. BRANCH CIRCUITS THAT ARE OVER 100 FEET IN LENGTH FROM THE PANEL TO THE FIRST OUTLET SHALL HAVE THE CONDUCTORS ONE SIZE LARGER THAN INDICATED IN THE PANEL SCHEDULE.
2.A.6. THE QUANTITY OF CONDUCTORS MAY NOT BE INDICATED FOR ALL CIRCUITS. PROVIDE ALL CONDUCTORS AS REQUIRED FOR THE PROPER FUNCTION OF THE SYSTEM WHETHER INDICATED IN THE PANEL SCHEDULE OR NOT.

2.B. RACEWAYS:

2.B.1. RACEWAYS FOR INTERIOR APPLICATIONS SHALL BE ELECTRICAL METALLIC TUBING (EMT) WITH A MINIMUM SIZE OF 3/4" UNLESS OTHERWISE NOTED OR AS REQUIRED BY THE SPACE.
2.B.2. RACEWAYS FOR EXTERIOR APPLICATIONS SHALL BE PVC SCHEDULE 40 WITH A MINIMUM SIZE OF 1" UNLESS OTHERWISE NOTED OR AS REQUIRED BY THE SPACE.
2.B.3. EXPOSED RACEWAYS OR RACEWAYS SUBJECT TO PHYSICAL DAMAGE SHALL BE RIGID STEEL CONDUIT.
2.B.4. CONCEAL ALL RACEWAYS IN FINISHED WALLS, CEILINGS, AND FLOORS UNLESS OTHERWISE NOTED.
2.B.5. ANY EXPOSED RACEWAY SHALL BE RUN PARALLEL WITH OR AT RIGHT ANGLES TO THE BUILDING STRUCTURE, WALLS, OR PARTITIONS.
2.B.6. RACEWAY SUPPORTS SHALL BE STEEL HANGERS, CLAMPS, AND ASSOCIATED FITTINGS DESIGNED FOR TYPES AND SIZES OF RACEWAY TO BE SUPPORTED. SECURE ALL SUPPORTS TO THE BUILDING STRUCTURE. INSTALL AND SPACE SUPPORTS FOR RACEWAYS AS REQUIRED BY THE NEC UNLESS OTHERWISE NOTED.
2.B.7. EMT CONDUIT FITTINGS SHALL BE STEEL SET-SCREW.
2.B.8. MAINTAIN INDICATED FIRE RATINGS OF WALLS, PARTITIONS, CEILINGS, AND FLOORS AT RACEWAY PENETRATIONS. INSTALL SLEEVES AND SEAL WITH APPROPRIATE FIRESTOP MATERIALS TO MAINTAIN THE EXISTING RATING OF THE ASSEMBLY.
2.B.9. USE A MAXIMUM OF 72 INCHES OF TYPE HCF FLEXIBLE CONDUIT FOR FINAL CONNECTIONS TO LIGHT FIXTURES, EQUIPMENT SUBJECT TO VIBRATION OR MOVEMENT, MOTORS, AND TRANSFORMERS.
2.B.10. INSTALL A PULL STRING IN ALL EMPTY RACEWAYS.
2.B.11. CUT RACEWAY ENDS SQUARE AND REAM SMOOTH. DRAW UP RACEWAY ENDS TIGHT WITH THE CONDUIT CONNECTORS AND COUPLINGS.
2.B.12. WHERE RACEWAYS PENETRATE AN EXTERIOR WALL OR THE ROOF AND GO FROM AN INTERIOR SPACE TO AN EXTERIOR SPACE THOSE RACEWAYS SHALL BE SEATED TO PREVENT THE CIRCULATION OF WARM AIR TO A COLDER SECTION OF THE RACEWAY.

2.C. BOXES:

2.C.1. OUTLET BOXES SHALL BE RECESSED MOUNTED UNLESS OTHERWISE NOTED.
2.C.2. OUTLET BOXES SHALL BE CODE GAUGE STEEL AND OF THE SIZE INDICATED AS THE DRAWINGS OR AS REQUIRED FOR THE SPECIFIC CONDITIONS.
2.C.3. JUNCTION AND PULL BOXES SHALL GENERALLY BE LOCATED IN UNFINISHED SPACES AND ABOVE THE CEILING. PROVIDE PULL BOXES WHERE REQUIRED BY THE NEC AND WHEREVER NECESSARY TO FACILITATE THE PULLING OF CONDUCTORS. COVERS OF JUNCTION AND PULL BOXES SHALL BE ACCESSIBLE.
2.C.4. SET ALL BOXES SQUARE AND TRUE WITH ALL BUILDING FINISHES.

3. GROUNDING AND BONDING:

3.A. CONDUCTORS:

3.A.1. BOTH INSULATED AND BARE CONDUCTORS SHALL BE COPPER. INSULATION FOR INSULATED GROUNDING CONDUCTORS SHALL BE GREEN IN COLOR. CONDUCTORS SHALL BE SOLID FOR #8AWG AND SMALLER AND STRANDED FOR #6AWG AND LARGER.
3.A.2. INSTALL INSULATED EQUIPMENT GROUNDING CONDUCTORS WITH ALL FEEDERS AND BRANCH CIRCUITS. EQUIPMENT GROUNDING CONDUCTORS SHALL BE SIZED IN ACCORDANCE WITH THE OVERCURRENT PROTECTIVE DEVICE SERVING THAT FEEDER OR BRANCH CIRCUIT.
3.A.3. A TWO-PART REDUNDANT GROUNDING METHOD SHALL BE INSTALLED FOR BRANCH CIRCUITS IN PATIENT CARE AREAS IN ACCORDANCE WITH THE NEC. AN INSULATED COPPER EQUIPMENT GROUNDING CONDUCTOR SHALL BE INSTALLED WITH ALL BRANCH CIRCUITS AND ADDITIONALLY THE BRANCH CIRCUIT RACEWAY ITSELF SHALL QUALIFY AS AN EQUIPMENT GROUNDING CONDUCTOR.

3.B. MISCELLANEOUS:

3.B.1. GROUNDING BUS SHALL BE COPPER. BUS SHALL BE RECTANGULAR WITH A 1/4 BY 2 INCH CROSS SECTION UNLESS OTHERWISE NOTED.
3.B.2. GROUND RODS SHALL BE COPPER-CLAD AND 3/4 INCH BY 10 FEET IN SIZE UNLESS OTHERWISE NOTED.

4. IDENTIFICATION:

4.A. CONDUCTORS:

4.A.1. ALL CONDUCTORS 600V OR LESS SHALL BE IDENTIFIED FOR PHASE AND VOLTAGE LEVEL BY FOLLOWING COLORS UNLESS THE EXISTING FACILITIES IDENTIFICATION COLORS ARE DIFFERENT IN WHICH THOSE TAKE PRECEDENCE:

	PHASE A	PHASE B	PHASE C	NEUTRAL	GROUND
208/120V	BLACK	RED	BLUE	WHITE	GREEN
480/277V	BROWN	ORANGE	YELLOW	GRAY	GREEN

4.B. RACEWAYS AND JUNCTION BOXES:

4.B.1. RACEWAYS FOR CIRCUITS 600V OR LESS SHALL BE IDENTIFIED BY THE FOLLOWING COLORS UNLESS THE EXISTING FACILITIES IDENTIFICATION COLORS ARE DIFFERENT IN WHICH THOSE TAKE PRECEDENCE.

NORMAL POWER	SILVER
LIFE SAFETY POWER	YELLOW
CRITICAL POWER	ORANGE
EQUIPMENT POWER	GREEN
FIRE ALARM	RED

4.B.2. JUNCTION AND PULL BOX COVERS SHALL BE IDENTIFIED WITH AN ENGRAVED, SELF-ADHESIVE LABEL INDICATING THE SYSTEM VOLTAGE, BRANCH OF POWER, PANEL NAME, AND CIRCUIT NUMBER IF APPLICABLE.

4.C. EQUIPMENT:

4.C.1. EQUIPMENT SHALL BE IDENTIFIED WITH AN ENGRAVED, SELF-ADHESIVE LABEL INDICATING THE EQUIPMENT NAME, AMPERAGE, VOLTAGE, PHASE, BRANCH THE EQUIPMENT IS ON, WHERE THE EQUIPMENT IS FED FROM, AND THE FACILITY PHASING COLORS.
4.C.2. EQUIPMENT TO BE LABELED SHALL INCLUDE BUT NOT BE LIMITED TOO: PANELBOARDS, TRANSFORMERS, SWITCHGEAR, SWITCHBOARDS, SUBSTATIONS, MOTOR CONTROL CENTERS, ENCLOSED SWITCHES, ENCLOSED BREAKERS, TRANSFER SWITCHES, UPS EQUIPMENT, AND GENERATORS.

5. EQUIPMENT:

5.A. PANELBOARDS:

5.A.1. ENCLOSURES SHALL BE FLUSH AND/OR SURFACE MOUNTED CABINETS AS INDICATED ON THE FLOOR PLANS.
5.A.2. ENCLOSURES SHALL BE NEMA 1 FOR INDOOR DRY AND CLEAN LOCATIONS, NEMA 3R FOR OUTDOOR LOCATIONS, AND NEMA 4X STAINLESS STEEL FOR KITCHEN AREAS.
5.A.3. ENCLOSURES, PANELS, AND TRIM SHALL BE STEEL.
5.A.4. PHASE, NEUTRAL, AND GROUND BUSES SHALL BE COPPER.
5.A.5. CONDUCTOR CONNECTORS SHALL BE MECHANICAL TYPE LUGS SUITABLE FOR COPPER CONDUCTORS.
5.A.6. PANELBOARDS SHALL HAVE A FULLY RATED SHORT-CIRCUIT CURRENT RATING.
5.A.7. PANELBOARD CIRCUIT BREAKERS SHALL BE MOLDED CASE, THERMAL-MAGNETIC, BOLT-ON TYPE CIRCUIT BREAKERS.
5.A.8. PROVIDE A TYPEWRITTEN DIRECTORY CARD INSIDE EACH PANELBOARD DOOR.
5.A.9. PANELBOARDS SHALL BE MANUFACTURED BY SQUARE D OR GE. PANELBOARDS SHALL MATCH THE EXISTING BASE BUILDING DISTRIBUTION EQUIPMENT MANUFACTURER.

5.B. ENCLOSED SWITCHES AND CIRCUIT BREAKERS:

5.B.1. ENCLOSED SWITCHES SHALL BE HEAVY DUTY, SINGLE THROW, AND HORSEPOWER RATED WITH A LOCKABLE HANDLE THAT IS INTERLOCKED WITH THE COVER IN THE CLOSED POSITION.
5.B.2. ENCLOSED CIRCUIT BREAKERS SHALL BE MOLDED CASE, THERMAL-MAGNETIC TYPE CIRCUIT BREAKERS.
5.B.3. CONDUCTOR CONNECTORS SHALL BE MECHANICAL TYPE LUGS SUITABLE FOR COPPER CONDUCTORS.
5.B.4. ENCLOSED SWITCHES AND CIRCUIT BREAKERS SHALL BE PROVIDED WITH EQUIPMENT GROUND AND NEUTRAL BARS AS REQUIRED.
5.B.5. ENCLOSURES SHALL BE NEMA 1 FOR INDOOR DRY AND CLEAN LOCATIONS, NEMA 3R FOR OUTDOOR LOCATIONS, AND NEMA 4X STAINLESS STEEL FOR KITCHEN AREAS.
5.B.6. ENCLOSED SWITCHES AND CIRCUIT BREAKERS SHALL BE MANUFACTURED BY SQUARE D OR GE. ENCLOSED SWITCHES AND CIRCUIT BREAKERS SHALL MATCH THE EXISTING BASE BUILDING DISTRIBUTION EQUIPMENT MANUFACTURER.

5.C. FUSES:

5.C.1. FUSES FOR FEEDERS SHALL BE CLASS RK1 TIME DELAY CARTRIDGE TYPE FUSES.
5.C.2. FUSES FOR MOTOR BRANCH CIRCUITS AND ALL OTHER BRANCH CIRCUITS SHALL BE CLASS RK5 TIME DELAY CARTRIDGE TYPE FUSES.
5.C.3. FUSES SHALL BE MANUFACTURED BY COOPER BUSSMAN, FERRAS SHAWMUT, OR LITTLEFUSE.

5.D. MISCELLANEOUS:

5.D.1. EQUIPMENT SHALL BE PROVIDED WITH TERMINATION CONNECTIONS RATED AT 75°C.
5.D.2. ELECTRICAL EQUIPMENT SHALL BE FIELD MARKED WITH A WARNING LABEL TO WARN QUALIFIED PERSONS OF POTENTIAL ELECTRIC ARC FLASH HAZARDS.
5.D.3. DRAWINGS INDICATE MAXIMUM DIMENSIONS FOR EQUIPMENT INCLUDING CLEARANCES BETWEEN EQUIPMENT AND ADJACENT SURFACES AND OTHER ITEMS. COMPLY WITH INDICATED MAXIMUM DIMENSIONS.
5.D.4. MAINTAIN REQUIRED WORKSPACE CLEARANCES AND REQUIRED CLEARANCES FOR EQUIPMENT ACCESS DOORS AND PANELS.

6. WIRING DEVICES

6.A. GENERAL:

6.A.1. ALL DEVICES SHALL BE MANUFACTURED BY COOPER, HUBBELL, LEVITON, OR PASS & SEYMOUR.
6.A.2. WIRING DEVICES CONNECTED TO NORMAL POWER SHALL BE WHITE IN COLOR UNLESS OTHERWISE INDICATED BY THE ARCHITECT OR OWNER.
6.A.3. DEVICES COVERPLATES SHALL BE BRUSHED STAINLESS STEEL UNLESS OTHERWISE INDICATED BY THE ARCHITECT OR OWNER. DEVICE COVERPLATES SHALL BE ENGRAVED WITH THE PANEL NAME AND CIRCUIT NUMBER.
6.A.4. ALL WIRING DEVICES SHALL BE CAPABLE OF BEING GANGED TOGETHER WHERE SHOWN ON THE FLOOR PLANS.
6.A.5. KEEP DEVICE BOXES FREE OF PLASTER, DRYWALL JOINT COMPOUND, MORTAR, CEMENT, CONCRETE, DUST, PAINT, AND OTHER MATERIAL THAT MAY CONTAMINATE THE RACEWAY SYSTEM, CONDUCTORS, AND CABLES.
6.A.6. INSTALL DEVICE BOXES IN BRICK OR BLOCK WALLS SO THAT THE COVERPLATE DOES NOT CROSS A JOINT UNLESS THE JOINT IS TROWELED FLUSH WITH THE FACE OF THE WALL.
6.A.7. INSTALL WIRING DEVICES AFTER ALL WALL PREPARATION, INCLUDING PAINTING, IS COMPLETE.

6.B. RECEPTACLES:

6.B.1. RECEPTACLES SHALL BE 20A, 125V GROUNDING TYPE.
6.B.2. RECEPTACLES SHALL BE SPECIFICATION GRADE.
6.B.3. SPECIAL NEMA RECEPTACLES SHALL BE SPECIFICATION GRADE SIMPLEX OUTLETS.
6.B.4. INSTALL GROUND PIN OF VERTICALLY MOUNTED RECEPTACLES UP, AND ON HORIZONTALLY MOUNTED RECEPTACLES TO THE RIGHT.

6.C. SWITCHES:

6.C.1. SWITCHES SHALL BE 20A, AND EITHER 120V GROUNDING TYPE.
6.C.2. SWITCHES SHALL BE SPECIFICATION GRADE.
6.C.3. DIMMER SWITCHES SHALL BE CONTINUOUSLY ADJUSTABLE TOGGLE SWITCH TYPE DIMMING SWITCHES. WHEN USED FOR LED LAMPS DIMMER SWITCHES SHALL BE COMPATIBLE WITH THE SUPPLIED DRIVERS.
6.C.4. COORDINATE THE LIGHT SWITCH LOCATIONS WITH DOOR SWINGS. SWITCHES SHALL BE INSTALLED ON THE LATCH SIDE OF THE DOOR AS CLOSE TO THE FRAME AS POSSIBLE.

6.D. OCCUPANCY SENSORS:

6.D.1. WALL MOUNTED DUAL TECHNOLOGY AUTOMATIC WALL SWITCH OCCUPANCY SENSORS SHALL BE WATTSTOPPER #DSW-301.
6.D.2. CEILING MOUNTED LINE-VOLTAGE DUAL TECHNOLOGY OCCUPANCY SENSORS SHALL BE WATTSTOPPER #DT-355.
6.D.3. CEILING MOUNTED LOW-VOLTAGE DUAL TECHNOLOGY OCCUPANCY SENSORS SHALL BE WATTSTOPPER #DT-305. PROVIDE WATTSTOPPER POWER PACK #BZ-150 FOR USE WITH THE LOW-VOLTAGE OCCUPANCY SENSORS.

7. LIGHTING:

7.A. FIXTURES:

7.A.1. PROVIDE A COMPLETE SYSTEM OF LIGHTING FIXTURES, ACCESSORIES, AND SUPPORTS AS SPECIFIED IN THE LIGHTING FIXTURE SCHEDULE AND AS SHOWN ON THE DRAWINGS.
7.A.2. COORDINATE THE LIGHTING FIXTURE LAYOUT WITH THE ARCHITECTURAL REFLECTED CEILING PLAN. ALL LIGHTING FIXTURES MOUNTED IN LAY-IN CEILING TILES SHALL BE LOCATED IN THE CENTER OF THE TILE UNLESS OTHERWISE DIRECTED BY THE ENGINEER OR ARCHITECT. SET LIGHT FIXTURES LEVEL, PLUMB, AND SQUARE WITH CEILINGS AND WALLS.
7.A.3. LIGHTING FIXTURES SUPPORT WIRES SHALL BE 12 GAUGE ZINC-COATED STEEL.

7.B. LAMPS:

7.B.1. LAMPS SHALL HAVE A MINIMUM COLOR TEMPERATURE OF 3500K UNLESS OTHERWISE SPECIFIED IN THE LIGHTING FIXTURE SCHEDULE.

8. LOW VOLTAGE SYSTEMS:

8.A. TELECOMMUNICATIONS:

8.A.1. PROVIDE A RECESSED BOX WITH A 3/4" EMPTY CONDUIT WITH PULL STRING STUBBED INTO THE ACCESSIBLE CEILING SPACE FOR ALL TELECOMMUNICATIONS OUTLETS.
8.A.2. CONCEAL ALL TELECOMMUNICATION RACEWAYS AND WIRING IN FINISHED WALLS, CEILINGS, AND FLOORS UNLESS OTHERWISE NOTED.

COMMONWEALTH OF VIRGINIA
JASON P. DAMICO
Lic. No. 048680
01/03/2024
PROFESSIONAL ENGINEER

DRAWINGS AND DESIGN © 2023 NORMAN SMITH ARCHITECTURE.
DRAWINGS AND SPECIFICATIONS AND THE IDEAS DESIGNS AND ARRANGEMENTS REPRESENTED THEREIN ARE THE EXCLUSIVE PROPERTY OF THE ARCHITECT AND REMAIN, WITHOUT EXCEPTION, THE PROPERTY OF THE ARCHITECT AND MAY NOT BE USED FOR ANY PURPOSE NOT SPECIFICALLY AGREED TO IN CONTRACT BETWEEN PLAINTIFF AND OWNER.
THE DRAWINGS AND SPECIFICATIONS MAY NOT BE REPRODUCED, CIRCULATED OR DISCLOSED TO OTHERS WITHOUT PRIOR WRITTEN AUTHORIZATION FROM THE ARCHITECT.
THE DRAWINGS AND SPECIFICATIONS ARE INSTRUMENTS OF SERVICE. THE ARCHITECT RETAINS OWNERSHIP AND PROPRIETARY RIGHTS IN THESE DOCUMENTS REGARDLESS OF WHETHER PROJECT IS COMPLETED.
IF THERE EXISTS AN USED OR SIGNED COPY OF THESE DRAWINGS, THE ELECTRONIC OR OTHERWISE FORMAT OF THE DOCUMENTS ARE DEEMED TO BE THE ARCHITECT'S SOLE PROPERTY. THE REPRODUCTION OF THESE DOCUMENTS, IN WHOLE OR IN PART, WITHOUT WRITTEN PERMISSION OF THE ARCHITECT IS PROHIBITED. THE ARCHITECT RETAINS ALL COMMON LAW, STATUTORY AND OTHER RESERVED RIGHTS, INCLUDING THE COPYRIGHT.
VERIFY ALL ELEVATIONS AND FIELD CONDITIONS PRIOR TO CONTRACTING WITH SUBCONTRACTORS OR VENDORS. ARCHITECT TO BE NOTIFIED OF ANY VARIANCE BETWEEN FACTUAL AND DRAWN CONDITIONS.
PLEASE READ BEFORE OPENING ELECTRONIC FILES: NORM PROVIDES:
THE ATTACHED ELECTRONIC FILE IS PROVIDED AS A CONVENIENCE TO THE RECIPIENT. NORM DOES NOT WARRANT THE ACCURACY OF THE ELECTRONIC FILE. THE RECIPIENT MUST VERIFY THE ACCURACY OF THE INFORMATION CONTAINED IN THE ELECTRONIC FILE BY COMPARING IT TO THE PRINTED DOCUMENT BEARING THE SEAL OF THE ARCHITECT. THE RECIPIENT AGREES TO INDEMNIFY AND HOLD HARMLESS THE ARCHITECT FROM ANY CLAIMS, LIABILITIES, OR OTHER LOSSES ARISING FROM THE RECIPIENT'S USE OF THE ELECTRONIC FILE.
THE RECIPIENT AGREES TO REMOVE ANY OWNERSHIP INDICATIONS, INCLUDING COPYRIGHT INFORMATION, FROM THE ELECTRONIC FILE BEFORE USING IT FOR ANY PURPOSE OTHER THAN THE PURPOSE FOR WHICH THE ORIGINAL DOCUMENTS WERE PROVIDED.
THE RECIPIENT AGREES TO NOT TRANSFER THE ELECTRONIC FILE TO OTHERS WITHOUT THE PRIOR WRITTEN CONSENT OF NORM.
THE RECIPIENT AGREES TO ASSUME ALL RISKS ASSOCIATED WITH THE USE OF THE ELECTRONIC FILE.

No.	Date	Revision Notes	Zone	Appr

No.	Date	Issue Notes
2	01/3/2024	release for bid
1	12/7/2023	permit subm

Date
Revision
Drawn By
Checked By
23/703:culpeper
Drawing Code
Reviewed By
CAD File Name
Plot Date

Designed By
Drawn By
Checked By
Project Manager

Design Firm
NORMAN SMITH ARCHITECTURE
13414 H Street, Washington, DC 20002-4906
3837 Slate Mills Road, Spernyville, VA 22740
T 202.462.5886 www.normansmitharchitecture.com

Civil/Mech
VALLEY ENGINEERING
4901 Crowe Drive, Mount Crawford, VA 22841
T 540.434.6365 www.valleyesp.com

Project Title
Culpeper County
Community Pool Project
16388 Competition Drive
Culpeper, VA

Sheet Title
ELECTRICAL
SPECIFICATIONS

Scale
NTS

Sheet No.
E000.3
of

PANEL SCHEDULE (NEW)

PANEL ID: MDP
LOCATION: CONCESSION STOR 118
FED FROM: POWER COMPANY TRANSFORMER
MOUNTING: SURFACE
ENCLOSURE: NEMA 1

VOLTAGE: 208/120V
PHASE: 3 PHASE, 4 WIRE
MAINS: 1000A BREAKER
MAIN BUS: 1200A
AIC: 65,000

BRANCH: NORMAL
BUS TYPE: COPPER
NEUTRAL: 100%
ISOLATED GND BUS: NO
FEED THROUGH LUGS: NO

Circuit	Load Description	Load (VA)	Wire Size	Grd Size	Cond	Amps	Pole	A	B	C	Pole	Amps	Cond	Grd Size	Wire Size	Load (VA)	Load Description	Circuit
1	FILTER RM 119 POOL PUMP	5550	4	6	1-1/2	60	3	5550			1	20	-	-	-		SPARE	2
3	---	5550	-	-	-	-	-		5550		1	20	-	-	-		SPARE	4
5	---	5550	-	-	-	-	-			5550	1	20	-	-	-		SPARE	6
7	FILTER RM 119 PLAY AREA PUMP	2000	8	8	1	30	2	32000			-	-	-	-	-	30000	---	8
9	---	2000	-	-	-	-	-		32000		-	-	-	-	-	30000	---	10
11	OAU/MAU-1 MOTOR DAMPERS	1000	12	12	3/4	20	1			31000	-	-	-	-	-	30000	---	12
13	FILTER RM 119 FILTER PUMP	800	8	8	1	30	3	6800			3	100	1-1/2	6	2	6000	DWH-2	14
15	---	800	-	-	-	-	-		6800		-	-	-	-	-	6000	---	16
17	---	800	-	-	-	-	-			6800	-	-	-	-	-	6000	---	18
19	ACHP-1	1300	10	10	3/4	30	2	3300			3	30	3/4	10	10	2000	DWH-3	20
21	---	1300	-	-	-	-	-		3300		-	-	-	-	-	2000	---	22
23	ACHP-2	1300	10	10	3/4	30	2			3300	-	-	-	-	-	2000	---	24
25	---	1300	-	-	-	-	-	3900			3	30	3/4	10	10	2600	FAM CHNG/LOCKERS EUH-1/2	26
27	---	2600	-	-	-	-	-		3600		-	-	-	-	-	2600	---	28
29	SPARE		-	-	-	20	1			2600	-	-	-	-	-	2600	---	30
31	ACHP-3	1000	10	10	3/4	30	2	3000			2	30	3/4	10	10	1000	FAM CHNG/LOCKERS EF-4/IF-1	32
33	---	2000	-	-	-	-	-		3000		-	-	-	-	-	1000	---	34
35	SPARE		-	-	-	20	1			1000	1	20	3/4	12	12	1000	EF-4/IF-1 MOTOR DAMPERS	36
37	SPARE		-	-	-	20	1	2400			3	60	1-1/2	6	4	2400	ACCU-1	38
39	ACHP-4	2000	10	10	3/4	30	2		4400		-	-	-	-	-	2400	---	40
41	---	2000	-	-	-	-	-			4400	-	-	-	-	-	2400	---	42
43	ACHP-5	1300	10	10	3/4	30	2	7300			3	100	1-1/2	6	2	6000	OAU-1	44
45	---	1300	-	-	-	-	-		7300		-	-	-	-	-	6000	---	46
47	ACH-1/ACH-2	2000	10	10	3/4	30	2			8000	-	-	-	-	-	6000	---	48
49	---	2000	-	-	-	-	-	3200			2	30	3/4	10	10	1200	TLT/FILTER/HOOD EF-1/EF-2	50
51	ACH-1/ACH-2	2000	10	10	3/4	30	2		3200		-	-	-	-	-	1200	---	52
53	---	2000	-	-	-	-	-			2000	1	20	-	-	-		SPARE	54
55	ACH-2/ACH-2	2000	10	10	3/4	30	2	2000			1	20	-	-	-		SPARE	56
57	---	2000	-	-	-	-	-		2000		1	20	-	-	-		SPARE	58
59	ACH-2/ACH-2	2000	10	10	3/4	30	2			2000	X	X	X	X	X		SPACE	60
61	---	2000	-	-	-	-	-	2000			X	X	X	X	X		SPACE	62
63	ACH-1/ACH-2	2000	10	10	3/4	30	2		2000		X	X	X	X	X		SPACE	64
65	---	2000	-	-	-	-	-			2000	X	X	X	X	X		SPACE	66
67	EDH-1	4000	4	6	1-1/2	60	3	4000			X	X	X	X	X		SPACE	68
69	---	4000	-	-	-	-	-		4000		X	X	X	X	X		SPACE	70
71	---	4000	-	-	-	-	-			4000	X	X	X	X	X		SPACE	72
73	SPACE		X	X	X	X	X	0			X	X	X	X	X		SPACE	74
75	SPACE		X	X	X	X	X		0		X	X	X	X	X		SPACE	76
77	SPACE		X	X	X	X	X			0	X	X	X	X	X		SPACE	78
79	SURGE PROTECTION DEVICE	0	-	-	-	30	3	11942			3	200	*	*	*	11942	PANEL 'L1'	80
81	---	0	-	-	-	-	-		15242		-	-	-	-	-	15242	---	82
83	---	0	-	-	-	-	-			14467	-	-	-	-	-	14467	---	84

* = REFER TO THE ELECTRICAL ONE-LINE DIAGRAM FOR WIRE AND CONDUIT SIZES.
PANEL SHALL BE SERVICE ENTRANCE RATED.
PANEL SHALL BE PROVIDED WITH AN INTEGRAL SURGE PROTECTION DEVICE (SPD). PROVIDE A CIRCUIT BREAKER (IF REQUIRED) SIZED AS REQUIRED BY THE EQUIPMENT MANUFACTURER.

	CONNECTED LOAD (VA) A	B	C	DEMAND FACTOR	DEMAND LOAD (VA) A	B	C
LIGHTING:	0	0	0	1.25	0	0	0
RECEPTACLES (1ST 10 KVA):	0	0	0	1.00	0	0	0
RECEPTACLES (REMAINDER):	0	0	0	0.50	0	0	0
LARGEST MOTOR LOAD:	5550	5550	5550	1.25	6937.5	6937.5	6937.5
REMAINING HVAC LOADS:	4000	4000	800	1.00	4000	4000	800
MISCELLANEOUS:	77842	82842	80766	1.00	77842	82842	80766
KITCHEN EQUIPMENT:	0	0	0	1.00	0	0	0
SUBTOTAL:	87392	92392	87116		88780	93780	88504

TOTAL CONNECTED LOAD:		266.9	KVA	TOTAL DEMAND LOAD:		271.1	KVA
TOTAL CONNECTED AMP./PHASE:	728.3	769.9	726.0 A	TOTAL DEMAND AMP./PHASE:	739.8	781.5	737.5 A

PANEL SCHEDULE (NEW)

PANEL ID: L1
LOCATION: CONCESSION STOR 118
FED FROM: PANEL 'MDP'
MOUNTING: SURFACE
ENCLOSURE: NEMA 1

VOLTAGE: 208/120V
PHASE: 3 PHASE, 4 WIRE
MAINS: NONE
MAIN BUS: 225A
AIC: 42,000

BRANCH: NORMAL
BUS TYPE: COPPER
NEUTRAL: 100%
ISOLATED GND BUS: NO
FEED THROUGH LUGS: NO

Circuit	Load Description	Load (VA)	Wire Size	Grd Size	Cond	Amps	Pole	A	B	C	Pole	Amps	Cond	Grd Size	Wire Size	Load (VA)	Load Description	Circuit
1	FAMILY CHG 2 107 RECEPTACLE	800	12	12	3/4	20	1	1000			1	20	3/4	12	12	200	JAN/W/D 113 WASHER RECEPT	2
3	FAMILY CHG 2 106 RECEPTACLE	800	12	12	3/4	20	1		2800		2	30	3/4	10	10	2000	JAN/W/D 113 DRYER RECEPT	4
5	M LOCKER RM 104 RECEPTACLE	400	12	12	3/4	20	1			2400	-	-	-	-	-	2000	---	6
7	M LOCK RM 104/WTR SVC 105 REC	800	12	12	3/4	20	1	1200			1	20	3/4	12	12	400	CONCESSION STOR 116 RECEPT	8
9	M LOCKER RM 104 SUIT DRYER ■•	1000	12	12	3/4	20	1		1200		1	20	3/4	12	12	200	CONCESSION STOR 116 REFRIG REC	10
11	W LOCKER RM 102 RECEPTACLE	400	12	12	3/4	20	1			600	1	20	3/4	12	12	200	CONCESSION STOR 116 REFRIG REC	12
13	W LOCK RM 102/JAN 1 103 REC	800	12	12	3/4	20	1	1000			1	20	3/4	12	12	200	CONCESSION STOR 116 REFRIG REC	14
15	W LOCKER RM 102 SUIT DRYER ■•	1000	12	12	3/4	20	1		1200		1	20	3/4	12	12	200	CONCESSION STOR 116 REFRIG REC	16
17	EXTERIOR RECEPTACLE	800	12	12	3/4	20	1			1200	1	20	3/4	12	12	400	FILTER RM 119 CONTROL PANEL	18
19	EXTERIOR RECEPTACLE	1000	12	12	3/4	20	1	1400			1	20	3/4	12	12	400	FILTER RM 119 CONTROL PANEL	20
21	EXTERIOR RECEPTACLE	600	12	12	3/4	20	1		1600		1	20	3/4	12	12	1000	■ FILTER RM 119 REGEN FILTER	22
23	EXTERIOR RECEPTACLE	600	12	12	3/4	20	1			1000	1	20	3/4	12	12	400	FILTER RM 119 CHEM FEED PUMP	24
25	FACILITY STOR 101 RECEPTACLE	600	12	12	3/4	20	1	1000			1	20	3/4	12	12	400	FILTER RM 119 CHEM FEED PUMP	26
27	MAIN VESTIBULE TV RECEPT	400	12	12	3/4	20	1		1400		1	20	3/4	12	12	1000	■ FILTER RM 119 HEATER	28
29	STOR 116/RESTRM 114 RECEPT	600	12	12	3/4	20	1			1600	1	20	3/4	12	12	1000	■ FILTER RM 119 CO2 TANK	30
31	OPEN OFC 112 RECEPTACLE	800	12	12	3/4	20	1	1200			1	20	3/4	12	12	400	FILTER RM 119 RECEPTACLE	32
33	OPEN OFC 112 RECEPTACLE	800	12	12	3/4	20	1		1800		1	20	3/4	12	12	1000	■ FILTER RM 119 CHLORINE ALARM	34
35	OPEN OFC 112 RECEPTACLE	1000	12	12	3/4	20	1			2000	1	20	3/4	12	12	1000	RECEPTN 109 FACP	36
37	RECPTN 109 RECEPTACLE	800	12	12	3/4	20	1	1800			1	20	3/4	12	12	1000	FAMILY CHG ELEC FIXTURES	38
39	RECPTN 109 RECEPTACLE	800	12	12	3/4	20	1		1800		1	20	3/4	12	12	1000	M LOCKER RM 104 ELEC FIXTURES	40
41	P&R OFC 110	1200	12	12	3/4	20	1			2200	1	20	3/4	12	12	1000	W LOCKER RM 102 ELEC FIXTURES	42
43	P&R OFC 110	800	12	12	3/4	20	1	1800			1	20	3/4	12	12	1000	RESTRM 114 ELEC FIXTURES	44
45	CLOS 111 RECEPTACLE	400	12	12	3/4	20	1		1400		1	20	3/4	10	10	1000	■ ATTIC POWER/LIGHTING	46
47	CLOS 111 RECEPTACLE	400	12	12	3/4	20	1			1400	1	20	3/4	10	10	1000	■ ATTIC POWER/LIGHTING	48
49	CLOS 111 RECEPTACLE	400	12	12	3/4	20	1	400			1	20	-	-	-		SPARE	50
51	CLASSROOM 115 RECEPTACLE	1200	12	12	3/4	20	1		1200		1	20	-	-	-		SPARE	52
53	CLASSROOM 115 RECEPTACLE	1000	12	12	3/4	20	1			1000	1	20	-	-	-		SPARE	54
55	CONCESSION 117 FREEZE RECEPT	200	12	12	3/4	20	1	200			1	20	-	-	-		SPARE	56
57	CONCESSION 117 REFRIG RECEPT	200	12	12	3/4	20	1		200		1	20	-	-	-		SPARE	58
59	CONCESSION 117 FREEZE RECEPT	200	12	12	3/4	20	1			200	1	20	-	-	-		SPARE	60
61	CONCESSION 117 SLUSHY RECEPT	200	12	12	3/4	20	1	200			1	20	-	-	-		SPARE	62
63	CONCESSION 117 U/C ICE RECEPT	200	12	12	3/4	20	1		200		1	20	-	-	-		SPARE	64
65	CONCESSION 117 POS RECEPT	800	12	12	3/4	20	1			800	1	20	-	-	-		SPARE	66
67	CONCESSION 117 POPCORN RECEPT	200	12	12	3/4	20	1	200			1	20	-	-	-		SPARE	68
69	CONCESSION 117 RECEPT	200	12	12	3/4	20	1		200		1	20	-	-	-		SPARE	70
71	CONCESSION 117 RECEPT	200	12	12	3/4	20	1			600	1	20	1-1/2	8	8	400	EXTERIOR POLE POWER	72
73	CONCESSION 117 POWER POLE REC	400	12	12	3/4	20	1	1300			1	20	3/4	10	10	900	CONCESS/STOR/PUMP LIGHTING	74
75	SPARE		-	-	-	20	1		900		1	20	3/4	10	10	900	OFF/CONF/STOR LIGHTING	76
77	SPARE		-	-	-	20	1			1000	1	20	3/4	10	10	1000	LOCKER RM/STORAGE LIGHTING	78
79	SURGE PROTECTION DEVICE	0	-	-	-	30	3	1000			1	20	3/4	10	10	1000	EXTERIOR LIGHTING	80
81	---	0	-	-	-	-	-		1000		1	20	1-1/2	8	8	1000	EXTERIOR PAVILION	82
83	---	0	-	-	-	-	-			1000	1	20	1-1/2	8	8	1000	EXTERIOR PAVILION	84

* = PROVIDE A GFCI TYPE CIRCUIT BREAKER.
■ = PROVIDE A CIRCUIT BREAKER HANDLE LOCK.

PANEL SHALL BE PROVIDED WITH AN INTEGRAL SURGE PROTECTION DEVICE (SPD). PROVIDE A CIRCUIT BREAKER (IF REQUIRED) SIZED AS REQUIRED BY THE EQUIPMENT MANUFACTURER.

	CONNECTED LOAD (VA) A	B	C	DEMAND FACTOR	DEMAND LOAD (VA) A	B	C
LIGHTING:	1900	2900	3000	1.25	2375	3625	3750
RECEPTACLES (1ST 10 KVA):	3333	3333	3333	1.00	3333	3333	3333
RECEPTACLES (REMAINDER):	4467	2267	4067	0.50	2233.5	1133.5	2033.5
LARGEST MOTOR LOAD:	0	0	0	1.25	0	0	0
REMAINING HVAC LOADS:	0	0	0	1.00	0	0	0
MISCELLANEOUS:	4000	8400	6600	1.00	4000	8400	6600
KITCHEN EQUIPMENT:	0	0	0	1.00	0	0	0
SUBTOTAL:	13700	16900	17000		11942	15242	14467

TOTAL CONNECTED LOAD:		47.6	KVA	TOTAL DEMAND LOAD:		41.6	KVA
TOTAL CONNECTED AMP./PHASE:	114.2	140.8	141.7 A	TOTAL DEMAND AMP./PHASE:	99.5	127.0	120.6 A

LIGHTING FIXTURE SCHEDULE

MARK	MANUFACTURER	CATALOG #	DESCRIPTION	MOUNTING	LAMPS NO.	LAMPS TYPE	VOLTAGE	REMARKS
A2	METALUX	22CGTX-45-L835-HCD	2' X 2' FLAT PANEL	RECESSED	LED	LED (27.9W)	120	PROVIDE A DIMMING DRIVER. FIXTURE SHALL BE IC RATED. FIXTURE SHALL BE DAMP LOCATION LISTED.
B2	METALUX	24CGTX-65-L835-HCD	2' X 4' FLAT PANEL	RECESSED	LED	LED (53.4W)	120	PROVIDE A DIMMING DRIVER. FIXTURE SHALL BE IC RATED. FIXTURE SHALL BE DAMP LOCATION LISTED.
D5	HALO	LT6089FS231EWHDM-HL6RSMF	6" SHOWER DOWNLIGHT	RECESSED	LED	LED (8.3W)	120	FIXTURE SHALL BE IC RATED. FIXTURE SHALL BE WET LOCATION LISTED.
D4	HALO	JBD4079FS1EWH-JBD4DIFF	4" SURFACE DOWNLIGHT	SURFACE	LED	LED (9.8W)	120	PROVIDE A DIMMING DRIVER. PROVIDE ROUND TRIM WITH FULL LENDS DIFFUSER.
D6E	HALO	SMD6R-12-9S-WH-EM-XX	6" EMERGENCY DOWNLIGHT	SURFACE	LED	LED (18.0W)	120	FIXTURE SHALL BE WET LOCATION LISTED. FIXTURE SHALL BE PROVIDED WITH AN EMERGENCY BATTERY DRIVER. XX = CONFIRM TRIM FINISH WITH THE ARCHITECT.
S1	FAIL-SAFE	4VRVT3-LD5-8-W-UNV-L835-CD1-WL-SSL	4' VAPORTITE	SURFACE	LED	LED (70W)	120	PROVIDE STAINLESS STEEL MOUNTING HARDWARE AND LATCHES. FIXTURE SHALL BE RATED FOR A POOL ENVIRONMENT. FIXTURE SHALL BE WET LOCATION LISTED.
WE	SURE-LITES	CU2-LED	EMERGENCY WALL PACK	WALL	LED	LED (1W)	120	FIXTURE SHALL BE DAMP LOCATION LISTED. COORDINATE THE MOUNTING HEIGHT WITH THE ARCHITECT.
WR	GREAT OUTDOORS BY MINKA-LAVERY	73182-66-L	EXTERIOR WALL	WALL	LED	LED (8W)	120	PROVIDE A DIMMING DRIVER. CONFIRM FINISH COLOR WITH THE ARCHITECT. COORDINATE THE MOUNTING HEIGHT WITH THE ARCHITECT.
WU	LUMIERE	303-W2-LED82-4000K-UNV-T2-DIM10-XX-EDGE	EXTERIOR WALL	WALL	LED	LED (15.5)	120	FIXTURE SHALL BE WET LOCATION LISTED. FIXTURE SHALL BE PROVIDED WITH UP AND DOWN LIGHT. XX = CONFIRM FINISH COLOR WITH THE ARCHITECT. COORDINATE THE MOUNTING HEIGHT WITH THE ARCHITECT.
W1E	LUMARK	XTOR6B-W-XX-PC1-CBP	EMERGENCY EXTERIOR WALL	WALL	LED	LED (58W)	120	FIXTURE SHALL BE PROVIDED WITH AN INTEGRAL PHOTOCELL. FIXTURE SHALL BE PROVIDED WITH AN EMERGENCY BATTERY DRIVER. XX = CONFIRM HOUSING COLOR WITH THE ARCHITECT. COORDINATE THE MOUNTING HEIGHT WITH THE ARCHITECT.
W2	SHAPER	605-25-W-L3/835-UNV-XX	2' VANITY LIGHT	WALL	LED	LED (20W)	120	FIXTURE SHALL BE DAMP LOCATION LISTED. XX = CONFIRM FINISH TYPE WITH THE ARCHITECT. COORDINATE THE MOUNTING HEIGHT WITH THE ARCHITECT.
W4	METALUX	4SWLED-48HL-LN-UNV-L835-HCD1	4' WALL LIGHT	WALL	LED	LED (44.6W)	120	FIXTURE SHALL BE MOUNTED CENTERED ABOVE THE DOOR.
X1	SURE-LITES	LPXW-7-1-R-BK-SD	SINGLE FACE EXIT	WALL/CEILING	LED	LED (3.3W)	120	FIXTURE SHALL BE WET LOCATION LISTED. FIXTURE SHALL BE PROVIDED WITH AN EMERGENCY BATTERY DRIVER.

NOTES: ALL INTERIOR LIGHT FIXTURES SHALL BE PROVIDED WITH LED LIGHT SOURCES OF THE SAME COLOR TEMPERATURE, 3500K, UNLESS OTHERWISE NOTED.
ALL EXTERIOR LIGHT FIXTURES SHALL BE PROVIDED WITH LED LIGHT SOURCES OF THE SAME COLOR TEMPERATURE, 4000K, UNLESS OTHERWISE NOTED.
SUPPORT ALL RECESSED LIGHT FIXTURES FROM THE BUILDING STRUCTURE WITH MINIMUM #12 CEILING HANGER WIRE, FROM EACH CORNER OF THE FIXTURE.
RECESSED LIGHT FIXTURES SHALL BE SHALLOW TYPE.
FIXTURES SHALL NOT BE SUBSTITUTED WITHOUT APPROVAL FROM BOTH THE ARCHITECT AND ENGINEER.

COMMONWEALTH OF VIRGINIA
JASON P. DAMICO
Lic. No. 048680
03/29/2024
PROFESSIONAL ENGINEER

DRAWINGS AND THEIRON-SITE IMPLEMENTATION, AND SHALL NOT BE USED FOR OTHER PROJECTS OR EXTENSIONS OF THIS PROJECT EXCEPT BY AGREEMENT IN WRITING AND APPROPRIATE COMPENSATION FOR THE ARCHITECT'S AND ENGINEER'S ADDITIONAL SERVICES. THE ARCHITECT AND ENGINEER WILL NOT BE RESPONSIBLE FOR ANY ALTERATIONS MADE TO THE DRAWINGS AND SPECIFICATIONS WITHOUT THE WRITTEN PERMISSION OF THE ARCHITECT AND ENGINEER.

DRAWINGS AND THEIRON-SITE IMPLEMENTATION, AND SHALL NOT BE USED FOR OTHER PROJECTS OR EXTENSIONS OF THIS PROJECT EXCEPT BY AGREEMENT IN WRITING AND APPROPRIATE COMPENSATION FOR THE ARCHITECT'S AND ENGINEER'S ADDITIONAL SERVICES. THE ARCHITECT AND ENGINEER WILL NOT BE RESPONSIBLE FOR ANY ALTERATIONS MADE TO THE DRAWINGS AND SPECIFICATIONS WITHOUT THE WRITTEN PERMISSION OF THE ARCHITECT AND ENGINEER.

IF THERE EXISTS ANY CONFLICTS BETWEEN THE DRAWINGS AND SPECIFICATIONS, THE ARCHITECT OR ENGINEER SHALL BE NOTIFIED IN WRITING PRIOR TO BIDDING. IF NO NOTIFICATION IS GIVEN, THE CONTRACTOR SHALL BE ASSUMED TO HAVE BID THE HIGHER COST OF THE WORK. THE CONTRACTOR SHALL BE RESPONSIBLE FOR ANY ADDITIONAL COSTS RESULTING FROM THE USE OF DRAWINGS AND SPECIFICATIONS CONTRARY TO THE ARCHITECT'S AND ENGINEER'S INTENT, UNLESS THE CONTRACTOR HAS NOTIFIED THE ARCHITECT AND ENGINEER IN WRITING PRIOR TO BIDDING.

VERIFY ALL ELEVATIONS, DIMENSIONS AND CONDITIONS IN THE FIELD BEFORE ORDERING MATERIALS OR PROCEEDING WITH THE WORK. ANY DISCREPANCIES SHOULD BE REPORTED TO THE OWNER'S PROJECT MANAGER OF ANY VARIANCE BETWEEN ACTUAL AND DRAWN CONDITIONS.

No.	Date	Issue Notes	Appr
3	3/29/24	rebid revisions	
2	01/3/2024	release for bid	
1	12/7/2023	permit subm	

Designed By: | Date:
Drawn By: | Release:
Checked By: | Plot: 23/703:culpeper
Reviewed By: | Drawing Code:
Submitted By: | CAD File Name:
Project Manager: | Plot Date:

Design Firm: NORMAN SMITH ARCHITECTURE
1341 H Street, Washington, DC 20002-4806
3637 Slate Mills Road, Spernyville, VA 22740
T 202.462.5686 www.normansmitharchitecture.com

Consultant: VALLEY ENGINEERING
4901 Crove Drive, Mount Crawford, VA 22841
T 540.434.6355 www.valleyesp.com

Project Title: Culpeper County Community Pool Project
16388 Competition Drive
Culpeper, VA

Sheet Title: ELECTRICAL SCHEDULES

Scale: NTS

Sheet No. E000.4
of

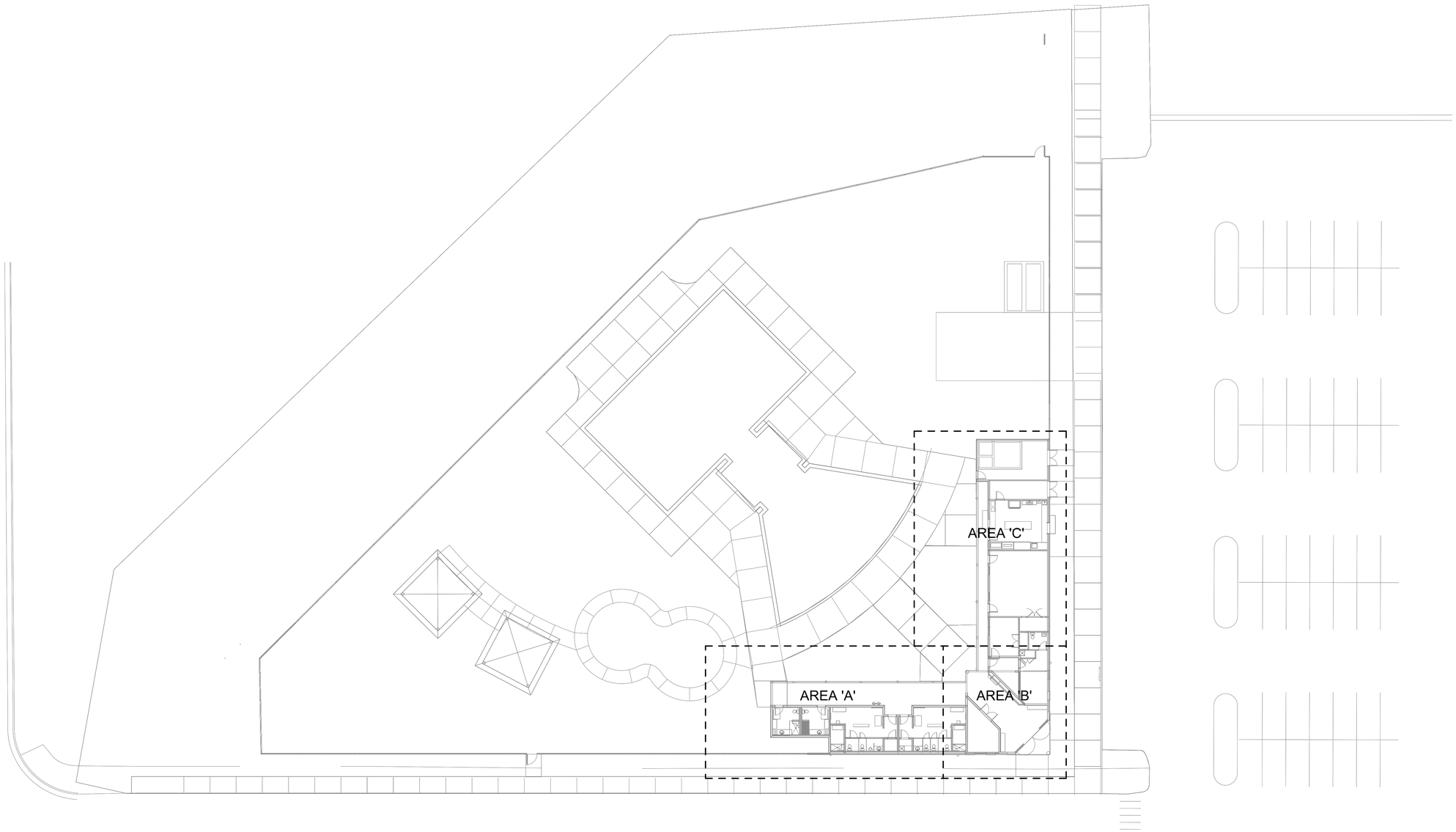

ELECTRICAL OVERALL PLAN

SCALE: 1" = 20'-0"

COMMONWEALTH OF VIRGINIA
JASON P. DAMICO
Lic. No. 048680
01/03/2024
PROFESSIONAL ENGINEER

DRAWINGS AND DESIGN © 2023 NORMAN SMITH ARCHITECTURE.
DRAWINGS AND SPECIFICATIONS AND THE IDEAS DESIGNS AND ARRANGEMENTS REPRESENTED THEREIN ARE THE PROPERTY OF THE ARCHITECT AND PERSONAL WITHOUT EXCEPTION, THE PROPERTY OF THE ARCHITECT AND MAY NOT BE USED FOR ANY PURPOSE WITHOUT THE ARCHITECT'S SERVICE CONTRACT BETWEEN PARTIES TO AND OWNER.
THE CONTRACTOR SHALL VERIFY ALL DIMENSIONS VERTICALLY MODIFIED BY THE ARCHITECT AND ENGINEER BEFORE PROCEEDING WITH WORK.
VERIFY THAT THEY ARE LEGIBLE AND ARE THE LATEST EDITION PRIOR TO CONSTRUCTION. ADDENDA, RFIS, CHANGE ORDERS AND OTHER MODIFICATIONS TO THE CONTRACT DOCUMENTS MAY OCCUR AFTER THE ISSUANCE OF THESE DRAWINGS.
VERIFY ALL ELEVATIONS AND FIELD CONDITIONS PRIOR TO CORRECTING IN FIELD ANY DEFICIENCIES OR DISCREPANCIES. NOTIFY ARCHITECT AND OWNER'S PROJECT MANAGER OF ANY VARIANCE BETWEEN PICTURE AND DRAWING DESIGN.

PLEASE READ BEFORE USING ELECTRONIC FILES: NORM PROVIDES:
THE ELECTRONIC FILES AS A GRAPHICAL REPRESENTATION OF THE DESIGN DRAWINGS PREPARED BY NORM. THE DRAWINGS WERE DEVELOPED FOR THE PURPOSE OF PRODUCING PRINTED DRAWINGS TO BE USED FOR CONSTRUCTION PURPOSES. NORM MAKES NO REPRESENTATION OR WARRANTY AS TO THE ACCURACY OR SUITABILITY OF THE ELECTRONIC FILES FOR ANY PURPOSE OTHER THAN THE PRODUCTION OF THE PRINTED DRAWINGS FOR WHICH THEY WERE PREPARED. THE ELECTRONIC FILES ARE PROVIDED "AS IS" WITHOUT WARRANTY OF ANY KIND, EXPRESS OR IMPLIED, INCLUDING WITHOUT LIMITATION, WARRANTIES OF MERCHANTABILITY AND FITNESS FOR A PARTICULAR PURPOSE. NORM DOES NOT WARRANT THAT THE ELECTRONIC FILES WILL BE ERROR FREE OR THAT THEY WILL OPERATE WITHOUT INTERRUPTION. THE ELECTRONIC FILES ARE NOT A COMPLETE REPRESENTATION OF THE DESIGN. NORM DOES NOT WARRANT THAT THE ELECTRONIC FILES WILL BE COMPATIBLE WITH THE OWNER'S OR ANY THIRD PARTY'S HARDWARE OR SOFTWARE.
IN ADDITION, THE ELECTRONIC FILES MAY CONTAIN A VIRUS, DEFECTS, OR OTHER ELEMENTS THAT MAY INTERFERE WITH OPERATION OF OWNER'S HARDWARE OR SOFTWARE. NORM DOES NOT WARRANT THAT THE ELECTRONIC FILES WILL BE FREE OF VIRUSES AND THAT THE OWNER'S USE OF THE ELECTRONIC FILES WILL NOT INTERFERE WITH THE OPERATION OF OWNER'S HARDWARE OR SOFTWARE. NORM DOES NOT WARRANT THAT THE ELECTRONIC FILES WILL BE COMPATIBLE WITH OWNER'S OPERATING SYSTEM OR OTHER SOFTWARE. NORM DOES NOT WARRANT THAT THE ELECTRONIC FILES WILL BE FREE OF ERRORS AND/OR OMISSIONS. NORM DOES NOT WARRANT THAT THE ELECTRONIC FILES WILL BE ERROR FREE OR THAT THEY WILL OPERATE WITHOUT INTERRUPTION. THE ELECTRONIC FILES ARE NOT A COMPLETE REPRESENTATION OF THE DESIGN. NORM DOES NOT WARRANT THAT THE ELECTRONIC FILES WILL BE COMPATIBLE WITH THE OWNER'S OR ANY THIRD PARTY'S HARDWARE OR SOFTWARE.
IN ADDITION, THE ELECTRONIC FILES MAY CONTAIN A VIRUS, DEFECTS, OR OTHER ELEMENTS THAT MAY INTERFERE WITH OPERATION OF OWNER'S HARDWARE OR SOFTWARE. NORM DOES NOT WARRANT THAT THE ELECTRONIC FILES WILL BE FREE OF VIRUSES AND THAT THE OWNER'S USE OF THE ELECTRONIC FILES WILL NOT INTERFERE WITH THE OPERATION OF OWNER'S HARDWARE OR SOFTWARE.

No.	Date	Revision Notes	Zone	Appr

No.	Date	Issue Notes
2	01/3/2024	release for bid
1	12/7/2023	permit subm

Designed By:
Drawn By:
Checked By:
Reviewed By:
Submitted By:
Project Manager:
Date
Release
Plot 23/7/3:culpeper
Drawing Circle
CAD File Name
Plot Date

Design Firm
NORMAN SMITH ARCHITECTURE
13414 H Street, Washington, DC 20002-4506
3837 Slate Mills Road, Spenryville, VA 22740
T 202.462.5886 www.normansmitharchitecture.com

Consultant
VALLEY ENGINEERING
4901 Crowe Drive, Mount Crawford, VA 22841
T 540.434.6365 www.valleyesp.com

Project Title
Culpeper County
Community Pool Project
163380 Competition Drive
Culpeper, VA

Sheet Title
ELECTRICAL OVERALL PLAN

Scale
1" = 20'-0"

Sheet No.
E100.0
of

☐ CONSTRUCTION NOTES

1. DHW-1: 90.0KW, 208V, 3Ø. PROVIDE A 400A, 240V, 3P + GROUND, NEMA 4X, FSS FUSED AT 400A.
2. PROVIDE A 20A, 120V, 1P CONNECTION FOR AN OWNER PROVIDED SWIMSUIT DRYER. COORDINATE THE EXACT LOCATION AND REQUIREMENTS PRIOR TO ROUGH-IN.
3. RECEPTACLE SHALL BE FOR AN OWNER PROVIDED FAN. COORDINATE THE EXACT HEIGHT AND LOCATION PRIOR TO ROUGH-IN.
4. RECEPTACLE AND DATA OUTLET SHALL BE FOR AN OWNER PROVIDED AED AND EMERGENCY PHONE. COORDINATE THE EXACT LOCATION AND REQUIREMENTS PRIOR TO ROUGH-IN.
5. EUH-1: 1.1KW, 208V, 3Ø. PROVIDE A 30A, 240V, 3P + GROUND, NEMA 4X, FSS FUSED AT 15A.

☐ CONSTRUCTION NOTES

6. EF-4: 3/4HP, 208V, 1Ø. PROVIDE A 30A, 240V, 2P + GROUND, NEMA 4X, FSS FUSED AT 15A.
7. PROVIDE A 20A, 120V, 1P, WP, HP RATED TOGGLE DISCONNECT AND CONNECTION FOR A MOTORIZED DAMPER.
8. PROVIDE A 20A, 120V, 1P CONNECTION FOR AN ELECTRONIC FLUSH VALVE. COORDINATE THE EXACT LOCATION AND REQUIREMENTS WITH THE PLUMBING CONTRACTOR PRIOR TO ROUGH-IN.
9. PROVIDE A 20A, 120V, 1P CONNECTION FOR AN ELECTRONIC FAUCET. COORDINATE THE EXACT LOCATION AND REQUIREMENTS WITH THE PLUMBING CONTRACTOR PRIOR TO ROUGH-IN.
10. RECEPTACLE SHALL BE FOR AN ELECTRONIC SOAP DISPENSER. COORDINATE THE EXACT LOCATION AND REQUIREMENTS PRIOR TO ROUGH-IN.
11. IF-1: 3/4HP, 208V, 1Ø. PROVIDE A 30A, 240V, 2P + GROUND, NEMA 4X, FSS FUSED AT 15A.
12. PROPOSED ATTIC ACCESS LOCATION. CONTRACTOR SHALL PROVIDE TWO (2) 20A, 120V, 1P, WP RECEPTACLE WITHIN THE ATTIC SPACE. CONTRACTOR SHALL PROVIDE A SWITCH AT THE ATTIC ACCESS ENTRANCE THAT WILL CONTROL FIVE (5) TYPE 'S1' LIGHT FIXTURES WITHIN THE ATTIC SPACE. ALL DEVICES SHALL BE CONNECTED TO CIRCUIT 'L1-46'.

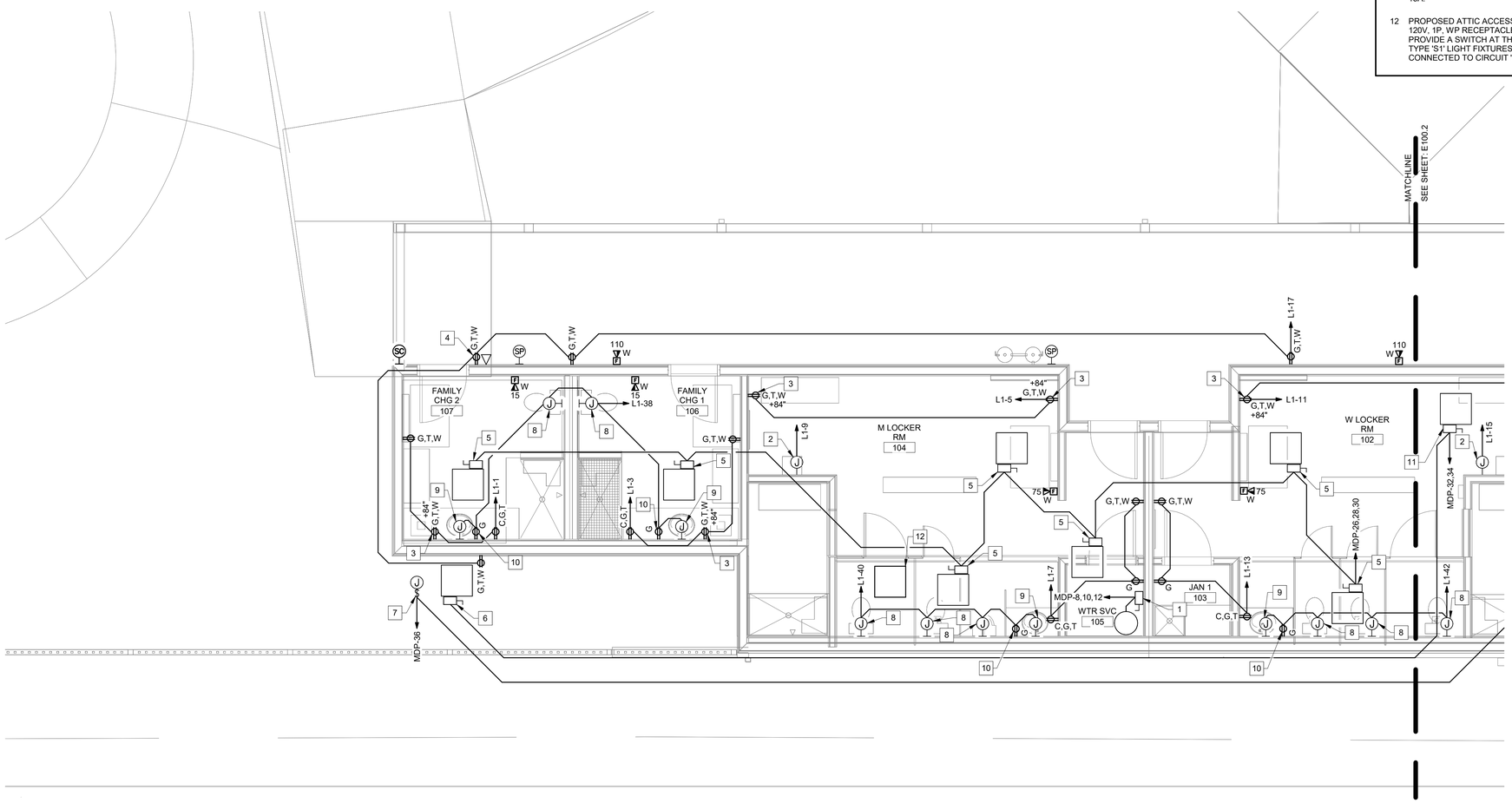

ELECTRICAL POWER PLAN - AREA 'A'

SCALE: 1/4" = 1'-0"

DRAWINGS AND DESIGN © 2023 NORMAN SMITH ARCHITECTURE.
DRAWINGS AND SPECIFICATIONS AND THE IDEAS DESIGNS AND ARRANGEMENTS REPRESENTED THEREIN ARE THE EXCLUSIVE PROPERTY OF THE ARCHITECT AND MUST NOT BE COPIED OR USED WITHOUT THE ARCHITECT'S PERMISSION, WITHOUT EXCEPTION, THE PROPERTY OF THE ARCHITECT AND MUST BE RETURNED UPON REQUEST. THESE DRAWINGS ARE INTENDED FOR CONTRACT BIDDING PURPOSES ONLY AND MAY BE PHYSICALLY MODIFIED BY THE ARCHITECT TO REFLECT AS-BUILT CONDITIONS.

CONTRACTOR SHALL VERIFY ALL DIMENSIONS, CONDITIONS AND QUANTITIES AS INDICATED ON THE DRAWINGS AND IN THE SPECIFICATIONS BEFORE COMMENCING WORK. VERIFY THAT THEY ARE IDEAL AS OF THE CORRECT AND CURRENT REVISION FOR THE WORK TO BE PERFORMED. REPORT ANY ERRORS, OMISSIONS OR CONFLICTS IN THE DRAWINGS OR SPECIFICATIONS TO THE ARCHITECT FOR CLARIFICATION BEFORE PROCEEDING WITH THE WORK. DO NOT SCALE DRAWINGS. DIMENSIONS GOVERN OVER SCALE. VERIFY ALL EXISTING AND FIELD CONDITIONS PRIOR TO CONSTRUCTION. NOTIFY THE ARCHITECT IMMEDIATELY OF ANY VARIANCE BETWEEN FACTUAL AND DRAWING CONDITIONS.

PLEASE READ BEFORE OPENING ELECTRONIC FILES: NORM PROVIDES THE ATTACHED ELECTRONIC FILE AS A CONVENIENCE TO OTHERS WHO MAY BE INTERESTED IN THE PROJECT DESCRIBED HEREIN. THE DRAWINGS AND SPECIFICATIONS ON THIS ELECTRONIC FILE ARE SUBMITTED FOR INFORMATION AND CONVENIENCE ONLY. THE DRAWINGS AND SPECIFICATIONS ON THIS ELECTRONIC FILE ARE NOT THE LEGAL REPRESENTATION OF THE ARCHITECT'S DESIGN AND MAY NOT BE RELIED UPON FOR ANY PURPOSE. THE ARCHITECT MAKES NO REPRESENTATIONS OR WARRANTIES OF ANY KIND REGARDING THE ACCURACY OF THE INFORMATION CONTAINED ON THIS ELECTRONIC FILE, AND THE ARCHITECT ASSUMES NO RESPONSIBILITY FOR ANY ERRORS OR OMISSIONS WHICH MAY APPEAR ON THIS ELECTRONIC FILE. THE ARCHITECT DISCLAIMS ALL LIABILITY FOR ANY DAMAGES, DIRECT OR INDIRECT, INCIDENTAL, SPECIAL OR CONSEQUENTIAL, ARISING OUT OF OR IN CONNECTION WITH THE USE OF THE DRAWINGS AND SPECIFICATIONS ON THIS ELECTRONIC FILE. ANY USE OF THE DRAWINGS AND SPECIFICATIONS ON THIS ELECTRONIC FILE IS SUBJECT TO THE ARCHITECT'S RIGHTS AS AN INSTRUMENT OF SERVICE.

IF THIS FILE IS USED TO PRODUCE PRINTED DRAWINGS, THE FILE IS ONLY AS OFFICIAL AND CONFORMING AS THE PRINTED DRAWINGS BEARING THE ARCHITECT'S SEAL AND SIGNATURE. THE ARCHITECT DISCLAIMS ALL LIABILITY FOR ANY DAMAGES, DIRECT OR INDIRECT, INCIDENTAL, SPECIAL OR CONSEQUENTIAL, ARISING OUT OF OR IN CONNECTION WITH THE USE OF THE DRAWINGS AND SPECIFICATIONS ON THIS ELECTRONIC FILE. THE ARCHITECT DISCLAIMS ANY RESPONSIBILITY FOR ANY DAMAGES ARISING FROM ANY CHANGES MADE TO THE DRAWINGS AND SPECIFICATIONS ON THIS ELECTRONIC FILE BY OTHERS. THE ARCHITECT DISCLAIMS ANY RESPONSIBILITY FOR ANY DAMAGES ARISING FROM THE USE OF THIS FILE ON OTHER PROJECTS OR FOR THE COMPLETION OF THIS PROJECT BY OTHERS

CONSTRUCTION NOTES

1. DHW-3: 6.0KW, 208V, 3Ø. PROVIDE A 30A, 240V, 3P + GROUND, NEMA 4X, FSS FUSED AT 30A.
2. PROVIDE A 20A, 120V, 1P CONNECTION FOR AN OWNER PROVIDED SWIMSUIT DRYER. COORDINATE THE EXACT LOCATION AND REQUIREMENTS PRIOR TO ROUGH-IN.
3. HVLS-1: FRACTIONAL HP, 120V, 1Ø. CONTRACTOR SHALL INSTALL ALL WIRE AND CONDUIT AS SHOWN. WORK ASSOCIATED WITH THE INSTALLATION OF THE FAN SHALL BE PRICED AS AN ADD ALTERNATE.
4. RECEPTACLE SHALL BE FOR AN OWNER PROVIDED FAN. COORDINATE THE EXACT HEIGHT AND LOCATION PRIOR TO ROUGH-IN.
5. PROVIDE A 20A, 120V, 1P CONNECTION FOR AN ELECTRONIC FLUSH VALVE. COORDINATE THE EXACT LOCATION AND REQUIREMENTS WITH THE PLUMBING CONTRACTOR PRIOR TO ROUGH-IN.
6. PROVIDE 3/4" FIRE RATED PLYWOOD AS SHOWN.
7. FIRE ALARM CONTROL PANEL AND FIRE ALARM ANNUNCIATOR SHALL BE IN A CONSTANTLY MONITORED LOCATION.
8. EUH-1: 1.1KW, 208V, 3Ø. PROVIDE A 30A, 240V, 3P + GROUND, NEMA 4X, FSS FUSED AT 15A.
9. IF-1: 3/4HP, 208V, 1Ø. PROVIDE A 30A, 240V, 2P + GROUND, NEMA 4X, FSS FUSED AT 15A.
10. PROVIDE A 20A, 120V, 1P, WP, HP RATED TOGGLE DISCONNECT AND CONNECTION FOR A MOTORIZED DAMPER.
11. ACHP-1: 11.1MCA, 208V, 1Ø. PROVIDE A 30A, 240V, 2P + GROUND, NEMA 4X, FSS FUSED AT 15A.
12. ACH-2: 1.0A, 208V, 1Ø. PROVIDE A 30A, 240V, 2P + GROUND, FSS FUSED AT 15A.

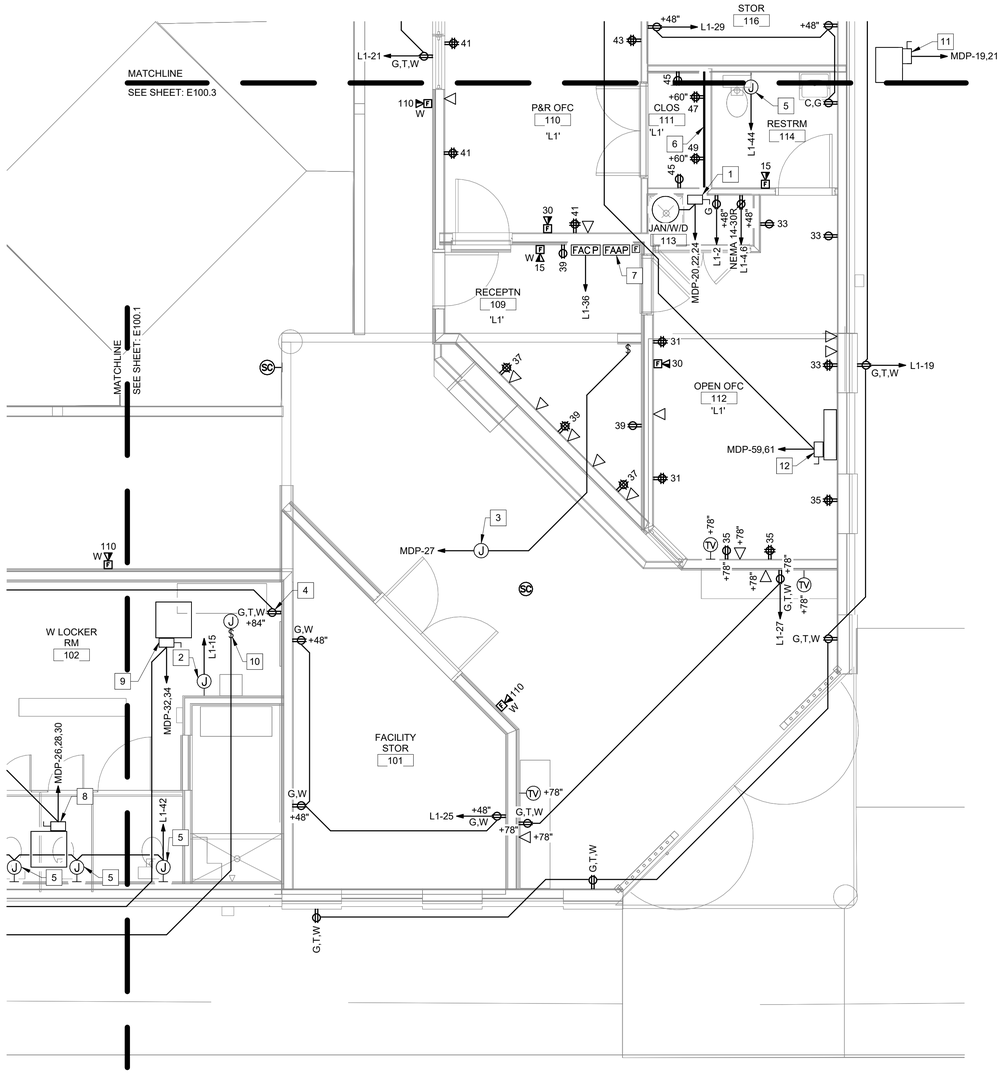

ELECTRICAL POWER PLAN - AREA 'B'

SCALE: 1/4" = 1'-0"

DRAWINGS AND DESIGN, ELECTRONIC FILES, WEB PAGES:
DRAWINGS AND SPECIFICATIONS AND THE IDEAS DESIGNS AND ARRANGEMENTS REPRESENTED THEREBY ARE THE PROPERTY OF THE ARCHITECT AND ARE NOT TO BE USED IN WHOLE OR IN PART FOR ANY PURPOSE OTHER THAN THE PROJECT FOR WHICH THEY WERE PREPARED AND MAY NOT BE SOLD OR OTHERWISE DISPOSED OF TO THIRD PARTIES WITHOUT THE WRITTEN CONSENT OF THE ARCHITECT. ALL REPRODUCTIONS, COPIES OR SUBSTANTIAL USE OF THE DESIGNS AND DRAWINGS WITHOUT WRITTEN CONSENT OF THE ARCHITECT, BY LAW, CONSTITUTE FRAUD. THE ARCHITECT RETAINS ALL COMMON LAW, STATUTORY AND OTHER RESERVED RIGHTS, INCLUDING THE COPYRIGHT.

Culpeper County Community Pool Project
163383 Competition Drive
Culpeper, VA

ELECTRICAL POWER PLAN - AREA 'B'

Scale: 1/4" = 1'-0"

Sheet No.: E100.2 — of —

Design Firm: NORMAN SMITH ARCHITECTURE
1341 H Street, Washington, DC 20002-4906
3537 Slate Mills Road, Spenyville, VA 22740
T 202.462.5686 www.normansmitharchitecture.com

Consultant: VALLEY ENGINEERING
4901 Crove Drive, Mount Crawford, VA 22841
T 540.434.6385 www.valleyesp.com

Designed By / Drawn By / Checked By / Reviewed By / Submitted By / Project Manager

Date / Revision / Project: 23703.culpeper / Drawing Code / CAD File Name / File Date

No.	Date	Issue Notes
2	01/3/2024	release for bid
1	12/7/2023	permit subm

No.	Date	Revision Notes	Zone	Appr

COMMONWEALTH OF VIRGINIA
JASON P. DAMICO
Lic. No. 048680
01/03/2024
PROFESSIONAL ENGINEER

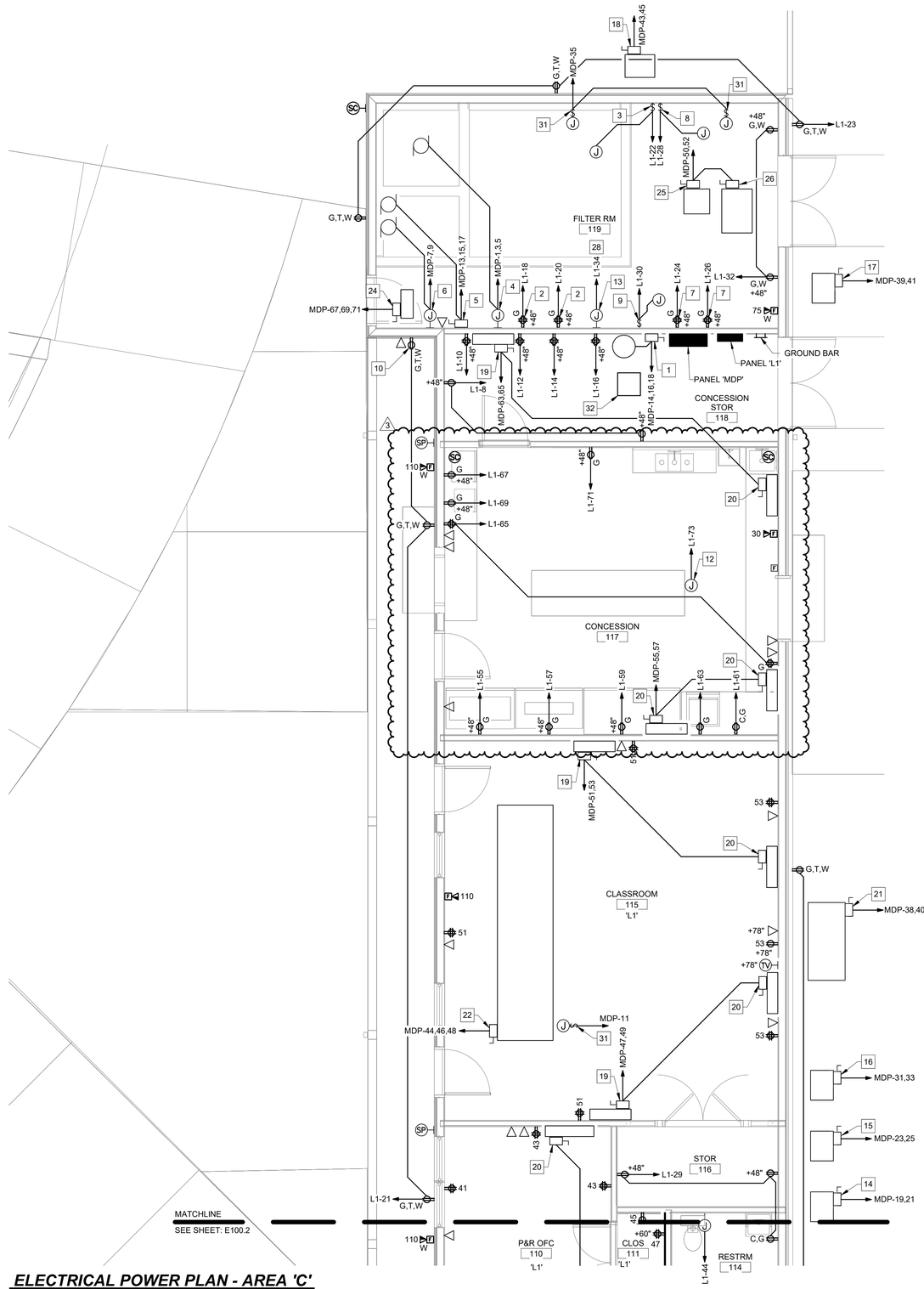

ELECTRICAL POWER PLAN - AREA 'C'

SCALE: 1/4" = 1'-0"

CONSTRUCTION NOTES

1 DWH-2: 18.0KW, 208V, 3Ø. PROVIDE A 100A, 240V, 3P + GROUND, NEMA 4X, FSS FUSED AT 80A.

2 PROVIDE A 20A, 120V, 1P, GFCI PROTECTED DOUBLE DUPLEX RECEPTACLE FOR A POOL CONTROL PANEL. COORDINATE THE EXACT LOCATION AND REQUIREMENTS PRIOR TO ROUGH-IN.

3 REGENERATIVE MEDIA FILTER: 20A, 120V, 1P. PROVIDE A 20A, 120V, 1P, WP, HP RATED TOGGLE DISCONNECT.

4 POOL PUMP: 15.0HP, 208V, 3Ø. PROVIDED WITH A VFD AND INTEGRAL DISCONNECT.

5 FILTER PUMP: 1.5HP, 208V, 3Ø. PROVIDED WITH A VFD. PROVIDE A 30A, 240V, 3P + GROUND, NEMA 4X, FSS FUSED AT 15A.

6 PLAY AREA PUMP: 5.0HP, 208V, 1Ø. PROVIDED WITH A VFD AND INTEGRAL DISCONNECT.

7 PROVIDE A 20A, 120V, 1P, GFCI PROTECTED DOUBLE DUPLEX RECEPTACLE FOR A CHEMICAL FEED PUMP. COORDINATE THE EXACT LOCATION AND REQUIREMENTS PRIOR TO ROUGH-IN.

8 POOL HEATER: 20A, 120V, 1P. PROVIDE A 20A, 120V, 1P, WP, HP RATED TOGGLE DISCONNECT. WORK ASSOCIATED WITH THE POOL HEATER SHALL BE PRICED AS AN ADD ALTERNATE.

9 CO2 TANK: 20A, 120V, 1P. PROVIDE A 20A, 120V, 1P, WP, HP RATED TOGGLE DISCONNECT.

10 RECEPTACLE AND DATA OUTLET SHALL BE FOR AN OWNER PROVIDED AED AND EMERGENCY PHONE. COORDINATE THE EXACT LOCATION AND REQUIREMENTS PRIOR TO ROUGH-IN.

11 NOT USED.

12 PROVIDE A STAINLESS STEEL POWER POLE FOR RECEPTACLE POWER AT THE PREP TABLE. PROVIDE TWO (2) 20A, 120V, 1P, GFCI PROTECTED DUPLEX RECEPTACLES ON THE POWER POLE. COORDINATE THE EXACT LOCATION AND REQUIREMENTS PRIOR TO ROUGH-IN.

13 PROVIDE A 20A, 120V, 1P CONNECTION FOR A CHLORINE ALARM. COORDINATE THE EXACT LOCATION AND REQUIREMENTS PRIOR TO ROUGH-IN.

14 ACHP-1: 11.1MCA, 208V, 1Ø. PROVIDE A 30A, 240V, 2P + GROUND, NEMA 4X, FSS FUSED AT 15A.

15 ACHP-2: 11.1MCA, 208V, 1Ø. PROVIDE A 30A, 240V, 2P + GROUND, NEMA 4X, FSS FUSED AT 15A.

16 ACHP-3: 18.4MCA, 208V, 1Ø. PROVIDE A 30A, 240V, 2P + GROUND, NEMA 4X, FSS FUSED AT 25A.

17 ACHP-4: 18.4MCA, 208V, 1Ø. PROVIDE A 30A, 240V, 2P + GROUND, NEMA 4X, FSS FUSED AT 25A.

18 ACHP-5: 11.1MCA, 208V, 1Ø. PROVIDE A 30A, 240V, 2P + GROUND, NEMA 4X, FSS FUSED AT 15A.

19 ACH-1: 1.0A, 208V, 1Ø. PROVIDE A 30A, 240V, 2P + GROUND, FSS FUSED AT 15A.

20 ACH-2: 1.0A, 208V, 1Ø. PROVIDE A 30A, 240V, 2P + GROUND, FSS FUSED AT 15A.

21 ACCU-1: 20.0MCA, 208V, 3Ø. PROVIDE A 60A, 240V, 3P + GROUND, NEMA 4X, FSS FUSED AT 40A.

22 OAU-1: 64.0MCA, 208V, 3Ø. PROVIDE A 100A, 240V, 3P + GROUND, NEMA 4X, FSS FUSED AT 80A.

23 NOT USED.

24 EDH-1: 12.0KW, 208V, 3Ø. PROVIDE A 60A, 240V, 3P + GROUND, NEMA 4X, FSS FUSED AT 60A.

25 EF-1: 1/6HP, 208V, 1Ø. PROVIDE A 30A, 240V, 2P + GROUND, NEMA 4X, FSS FUSED AT 15A.

26 EF-2: 1/15HP, 208V, 1Ø. PROVIDE A 30A, 240V, 2P + GROUND, NEMA 4X, FSS FUSED AT 15A.

27 NOT USED.

28 PROVIDE ALL GROUNDING AND BONDING FOR POOL EQUIPMENT IN ACCORDANCE WITH THE NEC ARTICLE 680.

29 NOT USED.

30 NOT USED.

31 PROVIDE A 20A, 120V, 1P, WP, HP RATED TOGGLE DISCONNECT AND CONNECTION FOR A MOTORIZED DAMPER.

32 PROPOSED ATTIC ACCESS LOCATION. CONTRACTOR SHALL PROVIDE TWO (2) 20A, 120V, 1P, WP RECEPTACLE WITHIN THE ATTIC SPACE. CONTRACTOR SHALL PROVIDE A SWITCH AT THE ATTIC ACCESS ENTRANCE THAT WILL CONTROL FIVE (5) TYPE 'S1' LIGHT FIXTURES WITHIN THE ATTIC SPACE. ALL DEVICES SHALL BE CONNECTED TO CIRCUIT 'L1-48'.

COMMONWEALTH OF VIRGINIA
JASON P. DAMICO
Lic. No. 048680
03/29/2024
PROFESSIONAL ENGINEER

DRAWINGS AND DESIGNS ARE ELECTRONICALLY FILED AND LOCKED.
DRAWINGS AND SPECIFICATIONS AND THE IDEAS, DESIGNS AND ARRANGEMENTS REPRESENTED THEREIN ARE THE PROPERTY OF THE ARCHITECT AND ARE NOT TO BE DISCLOSED TO OTHERS OR USED IN CONNECTION WITH ANY WORK OTHER THAN THE PROJECT FOR WHICH THEY HAVE BEEN PREPARED WITHOUT THE WRITTEN CONSENT OF THE ARCHITECT.
THE ARCHITECT WILL NOT BE RESPONSIBLE FOR ANY MODIFICATIONS MADE TO THE DRAWINGS AND SPECIFICATIONS WITHOUT THE WRITTEN CONSENT OF THE ARCHITECT.
VERIFY ALL SITE RELATED DIMENSIONS AND CONDITIONS PRIOR TO CONSTRUCTION. REPORT ANY ERRORS, OMISSIONS OR CONFLICTS TO THE ARCHITECT BEFORE PROCEEDING WITH THE WORK.
IF THERE EXISTS AN ISSUE OR WARRANTY RELATED TO THE DESIGN AND/OR SUPPORT OF THE EQUIPMENT, THE ARCHITECT WILL NOT BE RESPONSIBLE FOR ANY DAMAGES, INCLUDING BUT NOT LIMITED TO, DIRECT, INDIRECT, INCIDENTAL, PUNITIVE, AND CONSEQUENTIAL DAMAGES.
DRAWINGS AND SPECIFICATIONS PREPARED FOR THIS PROJECT ARE DESIGNED AND SUPPORTED BY THE EQUIPMENT MANUFACTURERS LISTED IN THE SPECIFICATIONS. ANY CHANGES TO THE EQUIPMENT SPECIFIED WILL REQUIRE THE CONTRACTOR TO PROVIDE ADDITIONAL SUPPORT DOCUMENTATION, ENGINEERING, AND/OR MATERIALS, AT CONTRACTOR'S EXPENSE, TO ENSURE THE SUITABILITY OF THE EQUIPMENT FOR THE INTENDED APPLICATION. THE ARCHITECT WILL NOT BE RESPONSIBLE FOR THE REQUIREMENTS OF THE MODIFICATIONS, PROVIDED.
ALL EQUIPMENT SUBSTITUTIONS, IF APPROVED, MUST BE PROVIDED WITH ALL ASSOCIATED COSTS, INCLUDING ENGINEERING, MATERIALS, AND LABOR, AT NO ADDITIONAL COST TO THE OWNER.
ALL EQUIPMENT SUBSTITUTIONS, IF APPROVED, MUST BE PROVIDED WITH ALL ASSOCIATED DIMENSIONAL CHANGES, INCLUDING BUT NOT LIMITED TO, ELECTRICAL, MECHANICAL, PLUMBING, AND STRUCTURAL, AT NO ADDITIONAL COST TO THE OWNER.
ALL EQUIPMENT SUBSTITUTIONS, IF APPROVED, MUST BE PROVIDED WITH ALL ASSOCIATED COSTS, INCLUDING ENGINEERING, MATERIALS, AND LABOR, AT NO ADDITIONAL COST TO THE OWNER.
ALL EQUIPMENT SUBSTITUTIONS, IF APPROVED, MUST BE PROVIDED WITH ALL ASSOCIATED DIMENSIONAL CHANGES, INCLUDING BUT NOT LIMITED TO, ELECTRICAL, MECHANICAL, PLUMBING, AND STRUCTURAL, AT NO ADDITIONAL COST TO THE OWNER.
ALL EQUIPMENT SUBSTITUTIONS, IF APPROVED, MUST BE PROVIDED WITH ALL ASSOCIATED COSTS, INCLUDING ENGINEERING, MATERIALS, AND LABOR, AT NO ADDITIONAL COST TO THE OWNER.
ALL EQUIPMENT SUBSTITUTIONS, IF APPROVED, MUST BE PROVIDED WITH ALL ASSOCIATED DIMENSIONAL CHANGES, INCLUDING BUT NOT LIMITED TO, ELECTRICAL, MECHANICAL, PLUMBING, AND STRUCTURAL, AT NO ADDITIONAL COST TO THE OWNER.

No.	Date	Issue Notes	Zone	Appr
3	3/29/24	rebid revisions		
2	013/2024	release for bid		
1	12/7/2023	permit subm		

No.	Date	Revision

Designed By
Drawn By
Checked By
Reviewed By
Submitted By
Project Manager

Project No: 23703.culpeper
Drawing Code:
CAD File Name:
Plot Date:

Design Firm: NORMAN SMITH ARCHITECTURE
1341 H Street, Washington, DC 20002-4906
3637 Sixte Mills Road, Sperryville, VA 22740
T 202.462.5888 www.normansmitharchitecture.com

Consultant: VALLEY ENGINEERING
4991 Crowe Drive, Mount Crawford, VA 22841
T 540.434.5365 www.valleyesp.com

Project Title: Culpeper County Community Pool Project
16388 Competition Drive
Culpeper, VA

Sheet Title: ELECTRICAL POWER PLAN - AREA 'C'

Scale: 1/4" = 1'-0"

Sheet No.: E100.3

of

GENERAL NOTES

1. LIGHT FIXTURE TYPE 'WE' AND TYPE 'X1' SHALL BE CONNECTED ON THE LINE SIDE OF THE LIGHTING CIRCUIT SERVING THE SAME AREA AHEAD OF ALL SWITCHING CONTROLS.

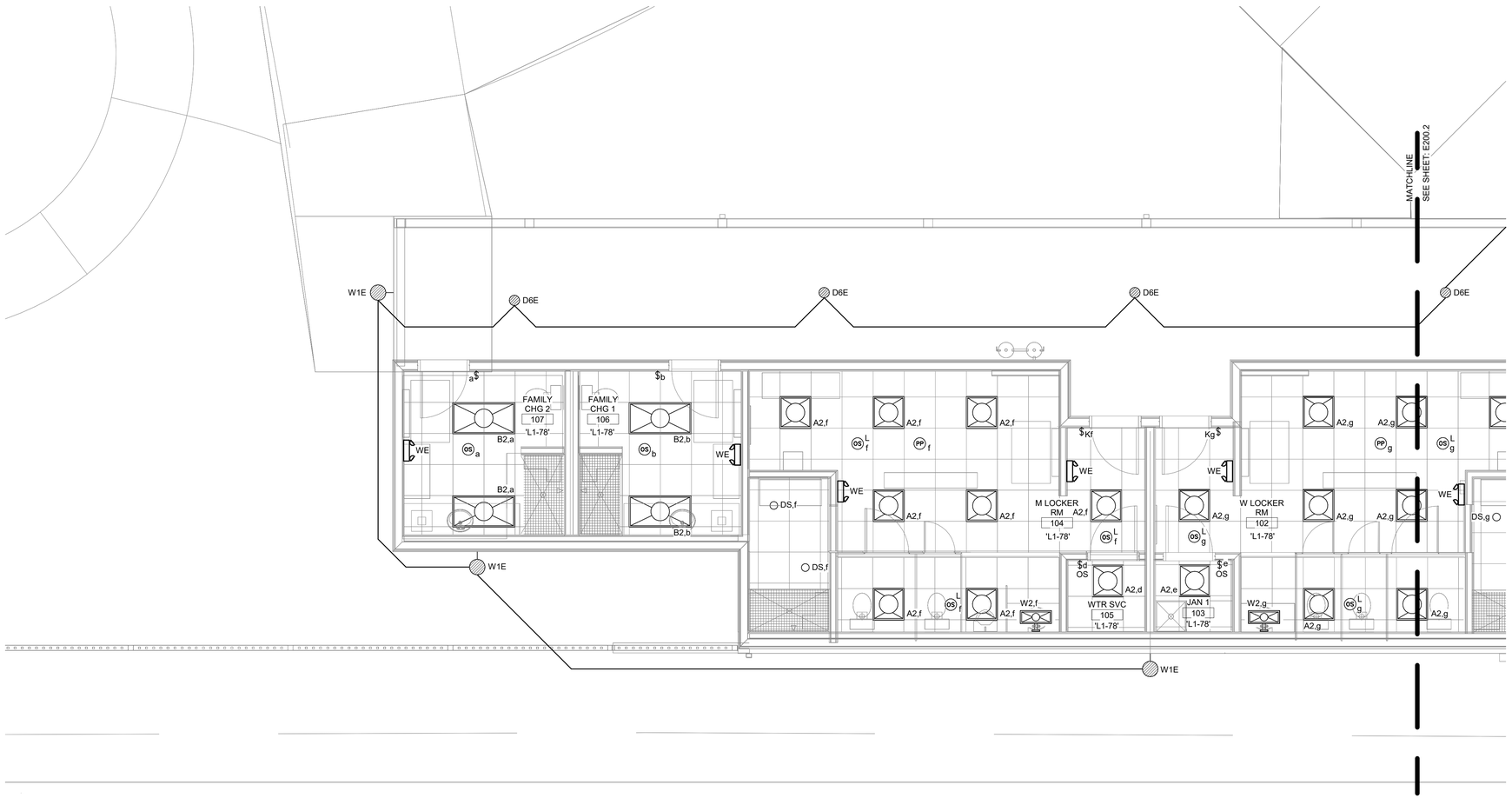

ELECTRICAL LIGHTING PLAN - AREA 'A'

SCALE: 1/4" = 1'-0"

PLEASE READ BEFORE USING ELECTRONIC FILES: READ THIS NOTICE.

DRAWINGS AND DESIGN © 2023 NORMAN SMITH ARCHITECTURE. DRAWINGS AND SPECIFICATIONS AND THE IDEAS DESIGNS AND ARRANGEMENTS REPRESENTED THEREBY ARE THE PROPERTY OF THE ARCHITECT AND ARE NOT TO BE USED IN WHOLE OR IN PART FOR ANY PURPOSE NOT SPECIFICALLY ANTICIPATED IN THE CONTRACT BETWEEN THE OWNER AND ARCHITECT. THEY ARE NOT TO BE CHANGED OR COPIED IN ANY FORM OR MANNER WHATSOEVER, NOR ARE THEY TO BE ASSIGNED TO ANY THIRD PARTY WITHOUT FIRST OBTAINING THE WRITTEN CONSENT OF THE ARCHITECT. IT IS ENVISIONED THAT THE ARCHITECT WILL MODIFY THE DRAWINGS AND SPECIFICATIONS AS NECESSARY TO ACCOMPLISH THE PROJECT OBJECTIVES. THE OWNER AGREES TO COORDINATE SUBMITTALS, SHOP DRAWINGS, PRODUCT DATA AND SAMPLES WITH ARCHITECT'S REVIEW SCHEDULE. THE OWNER AGREES TO RELEASE ARCHITECT FROM ALL CLAIMS, DAMAGES, LOSSES AND EXPENSES ARISING OUT OF OR RESULTING THEREFROM WHICH MAY BE MADE AGAINST ARCHITECT BY REASON OF THE USE OF SUCH SUBMITTALS, SHOP DRAWINGS, PRODUCT DATA AND SAMPLES WHICH ARE INCONSISTENT WITH THE ARCHITECT'S DRAWINGS AND SPECIFICATIONS. ARCHITECT'S REVIEW OF SUCH SUBMITTALS, SHOP DRAWINGS, PRODUCT DATA AND SAMPLES SHALL NOT RELIEVE THE CONTRACTOR OF THE CONTRACTOR'S OBLIGATIONS TO PERFORM THE WORK IN ACCORDANCE WITH THE CONTRACT DOCUMENTS. ARCHITECT'S REVIEW OF SUCH SUBMITTALS, SHOP DRAWINGS, PRODUCT DATA AND SAMPLES SHALL NOT BE DEEMED TO BE A WAIVER OF ANY RIGHTS UNDER THE CONTRACT DOCUMENTS. ARCHITECT SHALL NOT BE RESPONSIBLE FOR ANY DEVIATIONS FROM THE CONTRACT DOCUMENTS NOT SUBMITTED TO ARCHITECT FOR REVIEW AND ASSISTANCE IN CONSTRUCTION PHASE AND REMAIN UNCORRECTED.

IF THERE EXISTS AN ISSUE OR ERROR IN ANY OF THESE DRAWINGS, THE ISSUE IS NOT OFFICIAL AND CANNOT BE ACTED UPON UNTIL ALL PARTIES HAVE BEEN NOTIFIED AND THE ISSUE RESOLVED IN WRITING BY THE ARCHITECT. ALL ELECTRICAL EQUIPMENT, MATERIALS, OR SYSTEMS THAT ARE DEEMED NOT COMPLIANT WITH THE CONTRACT DOCUMENTS RESTRICTING THE USE OF OTHER THAN THE SPECIFIED MANUFACTURER'S EQUIPMENT, MATERIALS, OR SYSTEMS MUST BE REPORTED TO THE ARCHITECT PRIOR TO BIDDING. ALL EQUIPMENT, MATERIALS, OR SYSTEMS THAT DEVIATE FROM THE SPECIFICATIONS MUST BE ACCOMPANIED BY ALL INFORMATION, DATA, SAMPLES, ETC. NECESSARY TO ASSURE THE ARCHITECT OF THE ADEQUACY OF THE PROPOSED EQUIPMENT, MATERIALS, OR SYSTEMS AS FULLY SUITABLE AND ACCEPTABLE FOR THE PROJECT. ALL EQUIPMENT, MATERIALS, OR SYSTEMS THAT DO NOT COMPLY WITH THE ABOVE RESTRICTIONS MUST BE REPORTED TO THE ARCHITECT PRIOR TO BIDDING. ALL EQUIPMENT, MATERIALS, OR SYSTEMS THAT DO NOT COMPLY WITH THE ABOVE RESTRICTIONS MUST BE REPLACED WITH EQUIPMENT, MATERIALS, OR SYSTEMS THAT DO COMPLY WITH THE ABOVE RESTRICTIONS AT NO COST TO THE OWNER. ALL EQUIPMENT, MATERIALS, OR SYSTEMS THAT DO NOT COMPLY WITH THE ABOVE RESTRICTIONS MUST BE REPLACED WITH EQUIPMENT, MATERIALS, OR SYSTEMS THAT DO COMPLY WITH THE ABOVE RESTRICTIONS AT NO COST TO THE OWNER.

No.	Date	Revision Notes	Zone	Appr

No.	Date	Issue Notes
2	01/32/2024	release for bid
1	12/7/2023	permit subm

Designed By	
Drawn By	
Checked By	
Reviewed By	
Submitted By	
Project Manager	
Date	
Revision	
Plot	23/703.culpeper
Drawing Code	
CAD File Name	
Plot Date	

Design Firm
NORMAN SMITH ARCHITECTURE
1341 H Street, Washington, DC 20002-4906
3537 Slate Mills Road, Sperryville, VA 22740
T 202.462.5686 www.normansmitharchitecture.com

Consultant
VALLEY ENGINEERING
4901 Crove Drive, Mount Crawford, VA 22841
T 540.434.6385 www.valleyesp.com

Project Title
Culpeper County
Community Pool Project
163368 Competition Drive
Culpeper, VA

Sheet Title
ELECTRICAL LIGHTING PLAN - AREA 'A'

Scale
1/4" = 1'-0"

Sheet No.
E200.1
of

COMMONWEALTH OF VIRGINIA
JASON P. DAMICO
Lic. No. 048680
01/03/2024
PROFESSIONAL ENGINEER

GENERAL NOTES

1. LIGHT FIXTURE TYPE 'WE' AND TYPE 'X1' SHALL BE CONNECTED ON THE LINE SIDE OF THE LIGHTING CIRCUIT SERVING THE SAME AREA AHEAD OF ALL SWITCHING CONTROLS.

☐ CONSTRUCTION NOTES

1 LIGHT FIXTURE TO BE MOUNTED BELOW CLERESTORY WINDOWS ABOVE. CENTER FIXTURE BETWEEN WINDOWS. COORDINATE THE EXACT LOCATION PRIOR TO ROUGH-IN.

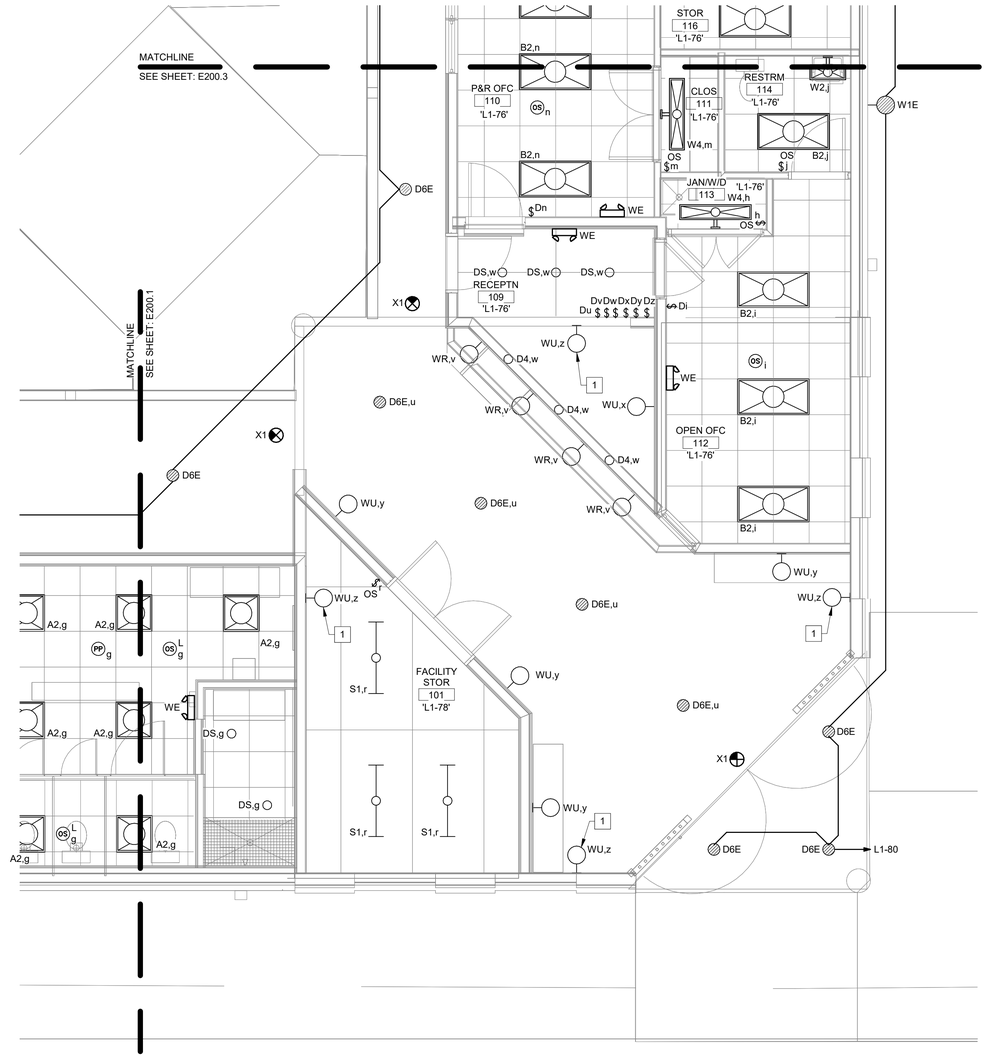

ELECTRICAL LIGHTING PLAN - AREA 'B'

SCALE: 1/4" = 1'-0"

PLEASE READ BEFORE USING ELECTRONIC FILES: READ THIS RIDER.

DRAWINGS AND DESIGN © 2023 NORMAN SMITH ARCHITECTURE.

DRAWINGS AND SPECIFICATIONS AND THE IDEAS DESIGNS AND ARRANGEMENTS REPRESENTED THEREIN ARE THE EXCLUSIVE PROPERTY OF THE ARCHITECT AND PERSONAL, WITHOUT EXCEPTION, THE PROPERTY OF THE ARCHITECT AND ARE TO BE RETURNED UPON REQUEST. THEY ARE NOT TO BE USED ON OTHER WORK OR PROJECTS, EXCEPT BY AGREEMENT IN WRITING BY THE ARCHITECT. THEY ARE NOT TO BE LOANED, COPIED OR REPRODUCED IN WHOLE OR IN PART, NOR ARE THE IDEAS, DESIGNS AND ARRANGEMENTS REPRESENTED THEREIN TO BE DISCLOSED TO OTHERS WITHOUT WRITTEN PERMISSION. THE ARCHITECT RETAINS THE COMMON LAW, STATUTORY AND OTHER RESERVED RIGHTS, INCLUDING THE COPYRIGHT.

DRAWINGS AND SPECIFICATIONS PREPARED FOR THIS PROJECT ARE INSTRUMENTS OF SERVICE FOR USE SOLELY WITH RESPECT TO THIS PROJECT AND, UNLESS OTHERWISE PROVIDED, ARE THE PROPERTY OF THE ARCHITECT. THE ARCHITECT RETAINS THE COMMON LAW, STATUTORY AND OTHER RESERVED RIGHTS, INCLUDING THE COPYRIGHT.

IF THIS FILE IS IN USE IN VIEWER AND/OR PRINTING PREPARATION, THE FILE IS FINAL OR OFFICIAL AND CANNOT BE ALTERED OR MODIFIED. IF THE FILE IS NOT FINAL OR OFFICIAL, THE FILE MAY BE ALTERED OR MODIFIED. THE ARCHITECT ASSUMES NO RESPONSIBILITY FOR ANY ALTERATIONS OR MODIFICATIONS TO THE DOCUMENT, DRAWING OR DATA AFTER THE FILE LEAVES THE ARCHITECT'S OFFICE. THE FILE IS INTENDED TO BE OPENED AND PRINTED ON 24" X 36" PAPER. THE ARCHITECT ASSUMES NO RESPONSIBILITY FOR ANY DIFFERENCES BETWEEN THE PRINTED DOCUMENT, DRAWING OR DATA AND THE ORIGINAL DOCUMENT, DRAWING OR DATA.

VERIFY ALL ELEVATIONS AND FIELD CONDITIONS PRIOR TO CONSTRUCTION. IF THERE ARE ANY DISCREPANCIES, THEY SHALL BE REPORTED TO THE OWNER'S PROJECT MANAGER OR ARCHITECT PRIOR TO PROCEEDING WITH WORK.

DRAWINGS AND SPECIFICATIONS, AS INSTRUMENTS OF SERVICE, IS THE ARCHITECT'S PROPERTY. THERE SHALL BE NO ALTERATIONS MADE TO THE DRAWINGS AND SPECIFICATIONS WITHOUT THE WRITTEN PERMISSION OF THE ARCHITECT.

No.	Date	Revision Notes	Zone	Appr

No.	Date	Issue Notes
2	01/3/2024	release for bid
1	12/7/2023	permit subm

Designed By:
Drawn By:
Checked By:
Reviewed By:
Submitted By:
Project Manager:
Date:
Release:
Project: 23703.culpeper
Drawing Order:
CAD File Name:
Plot Date:

Design Firm:
NORMAN SMITH ARCHITECTURE
1341 H Street, Washington, DC 20002-4906
3637 Slate Mills Road, Sperryville, VA 22740
T 202.462.5886 www.normansmitharchitecture.com

Consultant:
VALLEY ENGINEERING
4991 Crowe Drive, Mount Crawford, VA 22841
T 540.434.6365 www.valleyesp.com

Project Title:
Culpeper County
Community Pool Project
16388 Competition Drive
Culpeper, VA

Sheet Title:
ELECTRICAL LIGHTING
PLAN - AREA 'B'

Scale: 1/4" = 1'-0"

Sheet No.:
E200.2
of

COMMONWEALTH OF VIRGINIA
JASON P. DAMICO
Lic. No. 048680
01/03/2024
PROFESSIONAL ENGINEER

GENERAL NOTES

1. LIGHT FIXTURE TYPE 'WE' AND TYPE 'X1' SHALL BE CONNECTED ON THE LINE SIDE OF THE LIGHTING CIRCUIT SERVING THE SAME AREA AHEAD OF ALL SWITCHING CONTROLS.

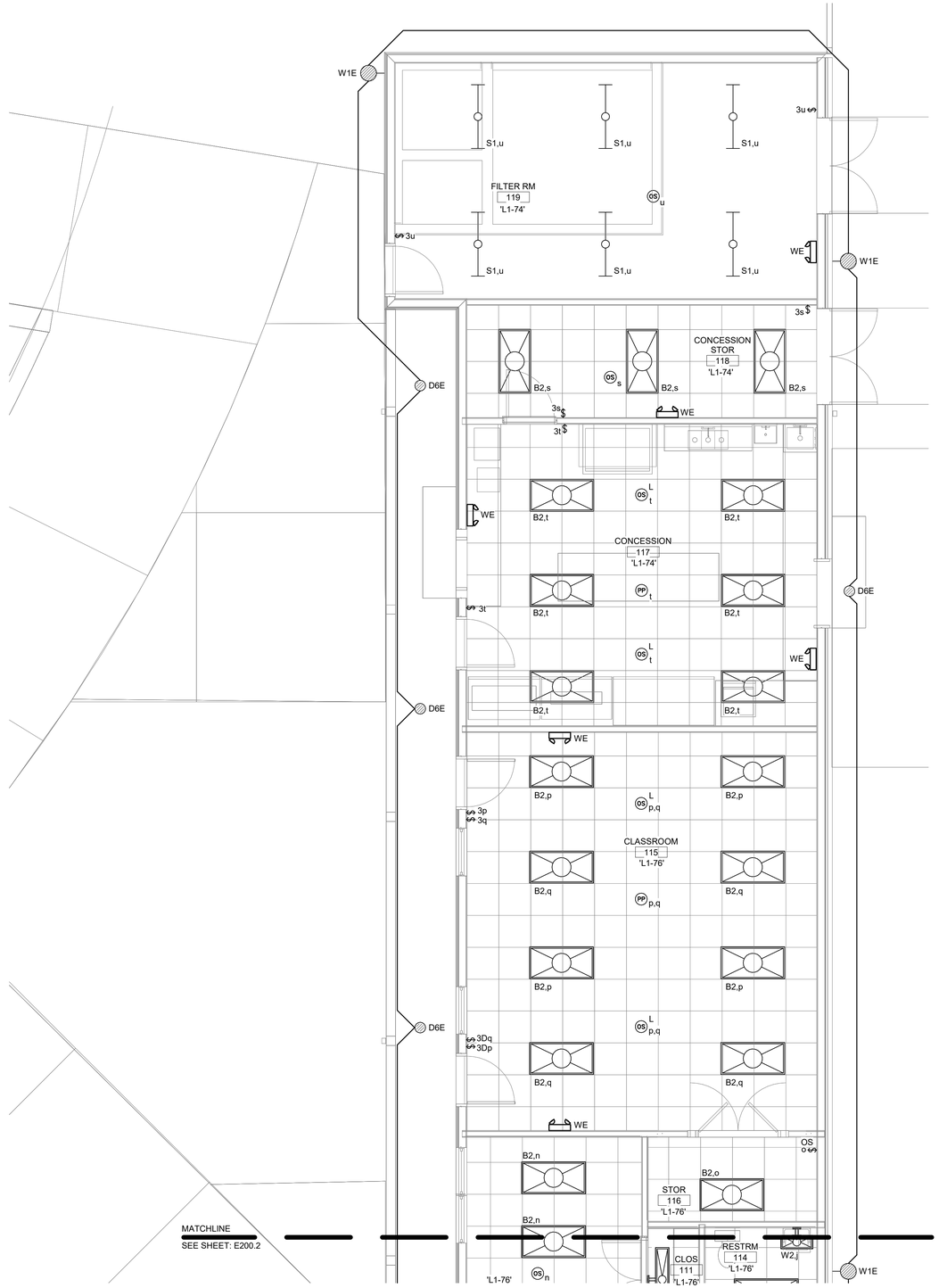

ELECTRICAL LIGHTING PLAN - AREA 'C'

SCALE: 1/4" = 1'-0"

DRAWINGS AND DESIGN © 2023 NORMAN SMITH ARCHITECTURE.
DRAWINGS AND SPECIFICATIONS AND THE IDEAS DESIGNS AND ARRANGEMENTS REPRESENTED THEREBY ARE THE EXCLUSIVE PROPERTY OF THE ARCHITECT AND PERSONAL WITHOUT EXCEPTION, THE PROPERTY OF THE ARCHITECT AND ARE TO BE RETURNED UPON REQUEST. THEY ARE NOT TO BE USED FOR ANY PURPOSE OTHER THAN THE PROJECT CONTRACT BETWEEN PARTIES TO WHOM THEY ARE ISSUED. THEY ARE NOT TO BE CHANGED OR ALTERED WITHOUT WRITTEN PERMISSION OF THE ARCHITECT AND OWNER.

PLEASE READ BEFORE ORDERING ELECTRICAL FIXTURES FROM PROVIDED:
THE ELECTRICAL DRAWINGS ARE DIAGRAMMATIC AND SHOULD NOT BE SCALED. THEY DO NOT SHOW ALL OF THE ELECTRICAL DETAILS REQUIRED FOR INSTALLATION. THE ELECTRICAL CONTRACTOR IS RESPONSIBLE FOR PROVIDING ALL ELECTRICAL MATERIALS AND EQUIPMENT NECESSARY TO COMPLETE THE ELECTRICAL INSTALLATION IN ACCORDANCE WITH THE CONTRACT DOCUMENTS. THE ELECTRICAL CONTRACTOR IS RESPONSIBLE FOR COORDINATING THE ELECTRICAL INSTALLATION WITH THE OTHER TRADES AND FOR PROVIDING ANY ADDITIONAL MATERIALS AND EQUIPMENT NECESSARY TO COMPLETE THE INSTALLATION IN ACCORDANCE WITH THE CONTRACT DOCUMENTS.

IF THERE EXISTS ANY ISSUES OR ERRORS AND/OR OMISSIONS, THE ELECTRICAL CONTRACTOR MUST NOTIFY THE ARCHITECT AND ENGINEER IMMEDIATELY. THE ELECTRICAL CONTRACTOR SHALL BE RESPONSIBLE FOR ANY ADDITIONAL COSTS RESULTING FROM ANY ERRORS OR OMISSIONS THAT COULD HAVE BEEN REASONABLY DISCOVERED BY THE ELECTRICAL CONTRACTOR DURING THE BIDDING PERIOD.

THE ELECTRICAL CONTRACTOR SHALL BE RESPONSIBLE FOR ALL OF THE COSTS FOR CORRECTING ALL ELECTRICAL WORK INSTALLED IN VIOLATION OF THE CONTRACT DOCUMENTS, INCLUDING ANY ADDITIONAL COSTS RESULTING FROM ANY DAMAGE OR DEFECTIVE WORK DISCOVERED AFTER PROVIDING CORRECTIVE ACTIONS.

THE ELECTRICAL CONTRACTOR SHALL BE RESPONSIBLE FOR ALL ELECTRICAL MATERIALS AND EQUIPMENT NECESSARY TO COMPLETE THE ELECTRICAL INSTALLATION IN ACCORDANCE WITH THE CONTRACT DOCUMENTS. THE ELECTRICAL CONTRACTOR SHALL BE RESPONSIBLE FOR ANY ADDITIONAL COSTS RESULTING FROM ANY DEFICIENCIES OR ERRORS IN THE REQUIREMENTS OF THE ARCHITECTURAL DRAWINGS.

THE ELECTRICAL CONTRACTOR SHALL BE RESPONSIBLE FOR ALL ELECTRICAL MATERIALS AND EQUIPMENT NECESSARY TO COMPLETE THE ELECTRICAL INSTALLATION IN ACCORDANCE WITH THE CONTRACT DOCUMENTS. THE ELECTRICAL CONTRACTOR SHALL BE RESPONSIBLE FOR ANY ADDITIONAL COSTS RESULTING FROM ANY DEFICIENCIES OR ERRORS IN THE REQUIREMENTS OF THE ARCHITECTURAL DRAWINGS.

No.	Date	Revision Notes	Zone	Appr

No.	Date	Issue Notes
2	01/3/2024	release for bid
1	12/7/2023	permit subm

Date
Release
Plot 23/7/3:culpeper
Drawing Done
CAD File Name
Plot Date

Designed By
Drawn By
Checked By
Reviewed By
Submitted By
Project Manager

Design Firm
NORMAN SMITH ARCHITECTURE
1341 H Street, Washington, DC 20002-4506
3837 State Mills Road, Spernyville, VA 22740
T 202.462.5588 www.normansmitharchitecture.com

Consultant
VALLEY ENGINEERING
4901 Crowe Drive, Mount Crawford, VA 22841
T 540.434.6365 www.valleyesp.com

Project Title
Culpeper County
Community Pool Project
16388 Competition Drive
Culpeper, VA

Sheet Title
ELECTRICAL LIGHTING PLAN - AREA 'C'

Scale
1/4" = 1'-0"

Sheet No.
E200.3
of

COMMONWEALTH OF VIRGINIA
JASON P. DAMICO
Lic. No. 048680
01/03/2024
PROFESSIONAL ENGINEER

COPPER FEEDER SCHEDULE

MARK	SETS	CONDUIT SIZE	CONDUCTORS AWG/KCMIL	NEUTRAL	GROUND	AMPACITY
C200a	1	2-1/2"	(3) #3/0 THWN	(1) #3/0 THWN	(1) #6 THWN	200A
C1140a	3	4"	(3) #500 THWN	(1) #500 THWN	--	1140A

☐ CONSTRUCTION NOTES

1. ELECTRICAL SECONDARY SERVICE. PROVIDE THREE (3) SETS OF (4)#500KCMIL IN THREE (3) 4" CONDUITS. REFER TO THE FOUR WAY ELECTRICAL SECONDARY SERVICE ENTRANCE DIRECT BURY DETAIL ON SHEET E500.1 FOR MORE INFORMATION.
2. FEEDERS SHALL BE INSTALLED UNDERGROUND TO PANEL 'MDP'.
3. MAIN SERVICE ENTRANCE GROUND. REFER TO THE MAIN GROUNDING SYSTEM DETAIL ON SHEET E500.1 FOR MORE INFORMATION.

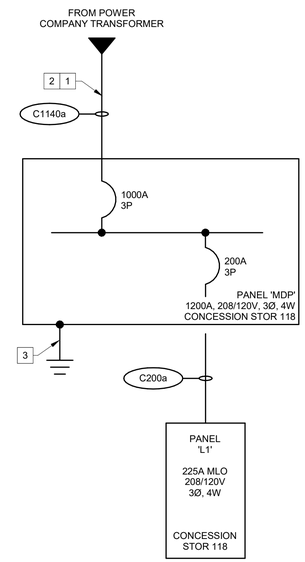

ELECTRICAL ONE-LINE DIAGRAM

NOT TO SCALE

LEGEND

LINE TYPE INDICATES WORK IS NEW

COMMONWEALTH OF VIRGINIA
JASON P. DAMICO
Lic. No. 048680
01/03/2024
PROFESSIONAL ENGINEER

PLEASE READ BEFORE USING ELECTRONIC FILES: READ THIS NOTICE.

DRAWINGS AND DESIGN © 2023 NORMAN SMITH ARCHITECTURE. DRAWINGS AND SPECIFICATIONS AND THE IDEAS DESIGNS AND ARRANGEMENTS REPRESENTED THEREIN ARE THE EXCLUSIVE PROPERTY OF THE ARCHITECT AND REMAIN, WITHOUT EXCEPTION, THE PROPERTY OF THE ARCHITECT AND ARE TO BE RETURNED UPON REQUEST. THEY ARE NOT TO BE USED ON ANY OTHER PROJECT EXCEPT UNDER WRITTEN AGREEMENT WITH THE ARCHITECT. THEY ARE NOT TO BE LOANED, COPIED OR DISTRIBUTED TO OTHERS WITHOUT THE PRIOR WRITTEN CONSENT OF THE ARCHITECT. THE ARCHITECT MAKES NO REPRESENTATIONS OR WARRANTIES OF ANY KIND REGARDING THE ACCURACY OF THE DRAWINGS OR SPECIFICATIONS FOR USE ON ANY OTHER PROJECT OR ON ANY PART OF THIS PROJECT NOT SPECIFICALLY DESIGNED BY THE ARCHITECT. THE ARCHITECT MAKES NO REPRESENTATIONS OR WARRANTIES OF ANY KIND REGARDING THE ACCURACY OF THE DRAWINGS OR SPECIFICATIONS FOR USE

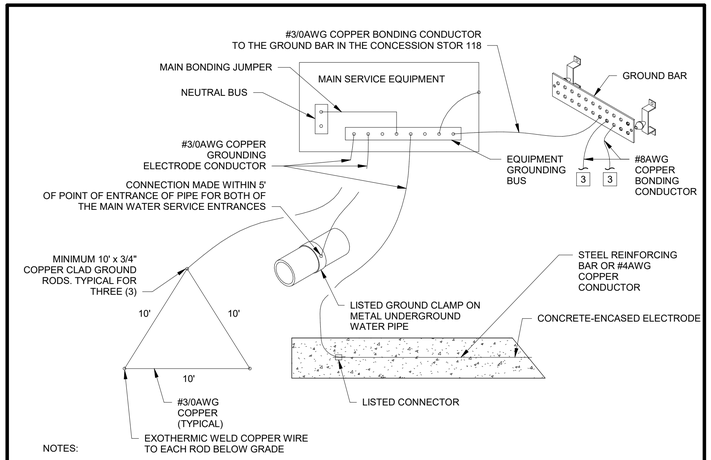

NOTES:

1. GROUNDING ELECTRODE CONDUCTOR SHALL BE SIZED IN ACCORDANCE WITH NEC ARTICLE 250.
2. PROVIDE ADDITIONAL GROUND RODS AS REQUIRED TO ACHIEVE 25 OHMS OR LESS RESISTANCE IN ACCORDANCE WITH THE NEC.
3. POOL BONDING RING. REFER TO THE POOL BONDING PLAN ON THE POOL EQUIPMENT PLANS FOR MORE INFORMATION.

MAIN GROUNDING SYSTEM DETAIL

NOT TO SCALE

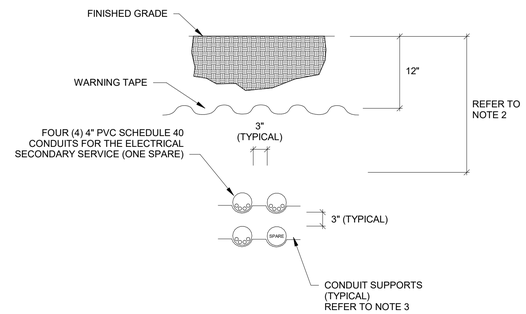

NOTES:

1. PROVIDE A PULL STRING IN ALL SPARE CONDUITS.
2. MINIMUM COVER DEPTH SHALL BE 24". REFER TO NEC TABLE 300.5 WHERE PROJECT CONDITIONS PREVENT MINIMUM 24" COVER REQUIREMENTS. COORDINATE AND VERIFY ANY DEPTH CHANGES WITH THE ENGINEER.
3. SUPPORT CONDUITS AS REQUIRED BY THE SPECIFICATIONS.

FOUR WAY ELECTRICAL SECONDARY SERVICE ENTRANCE DIRECT BURY DETAIL

NOT TO SCALE

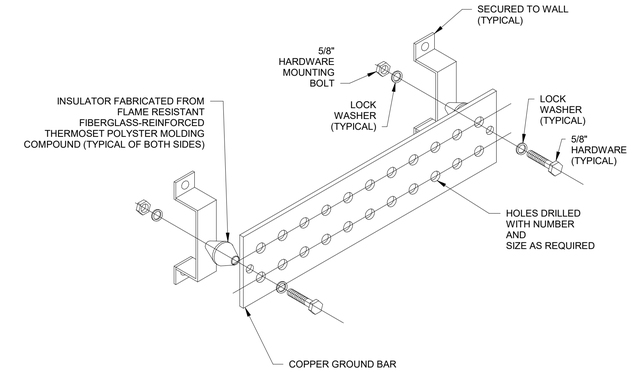

NOTES:

1. THE GROUND BAR SHALL BE 1/4" x 4" x LENGTH AS REQUIRED.
2. COORDINATE THE EXACT LENGTH WITH THE NUMBER OF CABLES CONNECTING.
3. THE GROUND BAR SHALL BE A MINIMUM OF 24" IN MAIN ELECTRICAL ROOMS AND A MINIMUM OF 20" IN ELECTRIC CLOSETS AND TELECOMMUNICATIONS ROOMS.
4. PROVIDE A #3/0AWG COPPER STRANDED BONDING CONDUCTOR CONNECTING ALL GROUND BARS WITHIN THE FACILITY.

GROUND BAR DETAIL

NOT TO SCALE

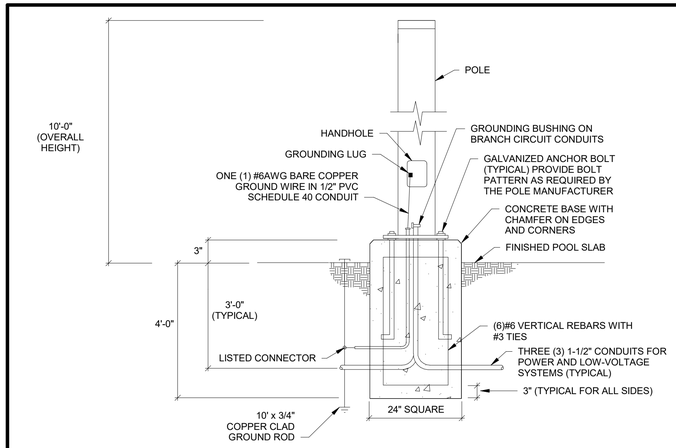

NOTES:

1. REFER TO THE STRUCTURAL DRAWINGS FOR THE EXACT BASE DIMENSIONS AND REQUIREMENTS.

POLE BASE DETAIL

NOT TO SCALE

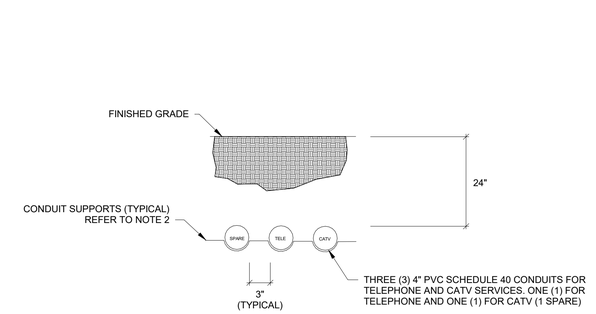

NOTES:

1. PROVIDE A PULL STRING IN ALL SPARE CONDUITS.
2. SUPPORT CONDUITS AS REQUIRED BY THE SPECIFICATIONS.

TELEPHONE AND CATV SERVICE DIRECT BURY CONDUIT DETAIL

NOT TO SCALE

COMMONWEALTH OF VIRGINIA
JASON P. DAMICO
Lic. No. 048680
01/03/2024
PROFESSIONAL ENGINEER

DRAWINGS AND DESIGN © 2023 NORMAN SMITH ARCHITECTURE.
DRAWINGS AND SPECIFICATIONS AND THE IDEAS DESIGNS AND ARRANGEMENTS REPRESENTED THEREIN ARE THE EXCLUSIVE PROPERTY OF THE ARCHITECT AND REMAIN, WITHOUT EXCEPTION, THE PROPERTY OF THE ARCHITECT AND MAY NOT BE USED FOR ANY PURPOSE NOT SPECIFICALLY AGREED TO IN CONTRACT BETWEEN THE ARCHITECT AND OWNER.
THESE DRAWINGS MAY NOT BE REPRODUCED OR TRANSMITTED IN WHOLE OR IN PART IN ANY FORM OR BY ANY MEANS, ELECTRONIC OR MECHANICAL, INCLUDING PHOTOCOPYING, RECORDING, OR ANY INFORMATION STORAGE AND RETRIEVAL SYSTEM, WITHOUT THE PRIOR WRITTEN PERMISSION OF THE ARCHITECT.
VERIFY THAT THEY ARE IDEALLY AT THE CORRECT AND CURRENT EDITION OF THE CODES, STANDARDS, AND REGULATIONS REFERENCED IN THE SPECIFICATIONS. ADDENDA, RFIS, CHANGE ORDERS AND OTHER CONTRACT DOCUMENTS MAY HAVE MODIFIED THE ORIGINAL DOCUMENTS.
VERIFY ALL ELEVATIONS AND FIELD CONDITIONS PRIOR TO CONTRACTING IN WITH OTHERS. REPORT ANY DISCREPANCIES TO THE ARCHITECT AND OWNER'S PROJECT MANAGER OF ANY VARIANCE BETWEEN FACTUAL AND DRAWN CONDITIONS.
PLEASE READ BEFORE USING ELECTRONIC FILES: NSA PROVIDES:
THE ELECTRONIC FILES ARE INSTRUMENTS OF SERVICE. ONLY THE ORIGINAL PAPER PLANS AND SPECIFICATIONS ARE THE CONTRACT DOCUMENTS. THE ELECTRONIC FILES ARE PROVIDED AS A CONVENIENCE TO THE RECIPIENT. THE RECIPIENT MUST VERIFY THE ACCURACY OF THE ELECTRONIC FILES BY COMPARING THEM TO THE ORIGINAL PAPER PLANS AND SPECIFICATIONS. THE ELECTRONIC FILES MAY CONTAIN INFORMATION THAT IS NOT PART OF THE CONTRACT DOCUMENTS, SUCH AS, BUT NOT LIMITED TO, GENERAL NOTES, DETAILS, SCHEDULES, ALTERNATES, ETC. THE RECIPIENT MUST REMOVE ALL SUCH INFORMATION FROM THE ELECTRONIC FILES BEFORE USING THEM.
IF THESE FILES ARE USED TO VIEW PLANS OF OTHER PROFESSIONALS, THE FILES WILL BE OPEN TO VIEW AND MAY BE PRINTED. THE RECIPIENT MUST REMOVE ALL SUCH INFORMATION FROM THE ELECTRONIC FILES BEFORE USING THEM.
THE RECIPIENT MUST ACCEPT THE ELECTRONIC FILES AS IS AND WITHOUT ALTERATIONS. NSA MAKES NO REPRESENTATIONS OR WARRANTIES OF ANY KIND, EXPRESS OR IMPLIED, INCLUDING, BUT NOT LIMITED TO, THE WARRANTIES OF MERCHANTABILITY AND FITNESS FOR A PARTICULAR USE, AS TO THE ACCURACY OF THE ELECTRONIC FILES. THE RECIPIENT AGREES TO INDEMNIFY AND HOLD NSA HARMLESS FROM ANY CLAIMS, DAMAGES, LOSSES, AND EXPENSES ARISING OUT OF OR RESULTING FROM THE RECIPIENT'S USE OF THE ELECTRONIC FILES.

No.	Date	Issue Notes
2	01/3/2024	release for bid
1	12/7/2023	permit subm

Date
Revision
Project 23/7/3:culpeper
Drawing Cover
CAD File Name
Plot Date

Designed By
Drawn By
Checked By
Reviewed By
Submitted By
Project Manager

Design Firm
NORMAN SMITH ARCHITECTURE
1341 H Street, Washington, DC 20002-4906
3837 Slate Mills Road, Spernyville, VA 22740
T 202.462.5588 www.normansmitharchitecture.com
Consultant
VALLEY ENGINEERING
4901 Crowe Drive, Mount Crawford, VA 22841
T 540.434.6365 www.valleyesp.com

Project Title
Culpeper County
Community Pool Project
163368 Competition Drive
Culpeper, VA

Sheet Title
ELECTRICAL DETAILS

Scale
NTS

Sheet No.
E500.1
of

No.	Date	Revision Notes	Zone	Appr

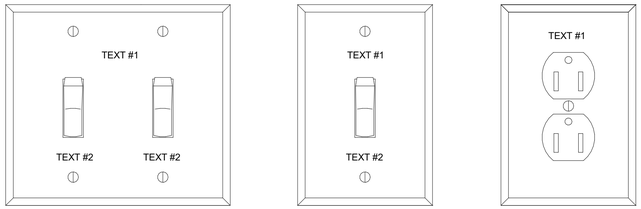

NOTES:
1. TEXT #1 = PANEL NAME AND CIRCUIT NUMBER.
2. TEXT #2 = THE LIGHTS THAT ARE CONTROLLED BY THE SWITCH (CORRIDOR 231/OFFICE 242/WAITING 242 DOWNLIGHTS/WAITING 242 PENDANTS) OR IF CONTROLLING A FIXTURE WITH MULTIPLE BALLASTS SUCH AS A PATIENT ROOM EXAM LIGHT ONE SWITCH WOULD INDICATED 'EXAM' AND THE OTHER SWITCH WOURLD INDICATE 'AMBIENT'.
3. PROVIDE A LIST DETAILING 'TEXT #1' AND 'TEXT #2' FOR ALL COVERPLATES FOR REVIEW BY THE ARCHITECT AND ENGINEER.

DEVICE PLATE ENGRAVING DETAIL

NOT TO SCALE

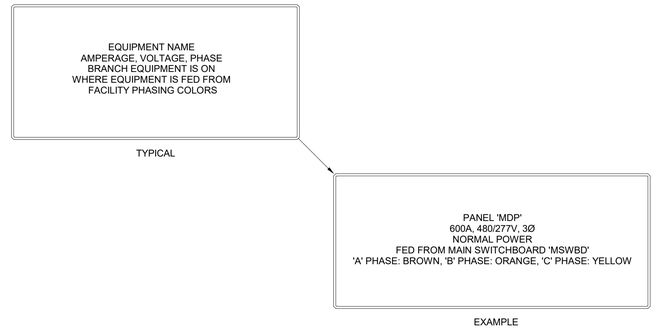

NOTES:
1. LABEL SHALL BE ENGRAVED, LAMINATED ACRYLIC OR MELAMINE, AND SELF ADHESIVE. LABEL SHALL HAVE A MINIMUM LETTER HEIGHT OF 3/8 INCH. NORMAL BRANCH POWER LABEL SHALL HAVE WHITE LETTERS AND A BLACK BACKGROUND. LIFE SAFETY BRANCH POWER LABEL SHALL HAVE BLACK LETTERS AND A YELLOW BACKGROUND. CRITICAL BRANCH POWER LABEL SHALL HAVE BLACK LETTERS AND AN ORANGE BACKGROUND. EQUIPMENT BRANCH POWER SHALL HAVE BLACK LETTERS AND A GREEN BACKGROUND. THE FACILITY COLOR CODING SCHEME SHALL TAKE PRECEDENCE.
2. EQUIPMENT TO BE LABELED SHALL INCLUDE BUT NOT BE LIMITED TOO: PANELBOARDS, TRANSFORMERS, SWITCHGEAR, SWITCHBOARDS, SUBSTATIONS, MOTOR CONTROL CENTERS, ENCLOSED SWITCHES, ENCLOSED BREAKERS, TRANSFER SWITCHES, UPS EQUIPMENT, AND GENERATORS.

EQUIPMENT IDENTIFICATION LABEL DETAIL

NOT TO SCALE

PANELBOARD INFORMATION

CIRCUIT #	LOAD DESCRIPTION	LOAD DESCRIPTION	CIRCUIT #
1	RECEPTACLE OFFICE ROOMS 400, 401	RECEPTACLE EXAM ROOMS 403, 404	2
3	LIGHTING OFFICE ROOMS 400, 401, 402	LIGHTING EXAM ROOMS 403, 404	4
5	REFRIGERATOR KITCHEN 402		

NOTES:
1. LOAD DESCRIPTION SHALL INCLUDE THE ITEM SERVED (RECEPTACLE, LIGHTING, ETC.) AND ALSO THE ITEM LOCATION (OFFICE ROOM 402, ETC.). VERIFY THE FINAL ROOM NAME AND ROOM NUMBER WITH THE ARCHITECT AND THE OWNER.
2. PANELBOARD INFORMATION SHALL INCLUDE THE PANEL NAME, AMPERAGE, VOLTAGE, PHASE, TYPE OF OVERCURRENT PROTECTION (MLO OR MCB), WHERE PANEL IS FED FROM, CONTRACTOR INFORMATION, AND DATE OF LAST UPDATE.

PANELBOARD IDENTIFICATION CARD DETAIL

NOT TO SCALE

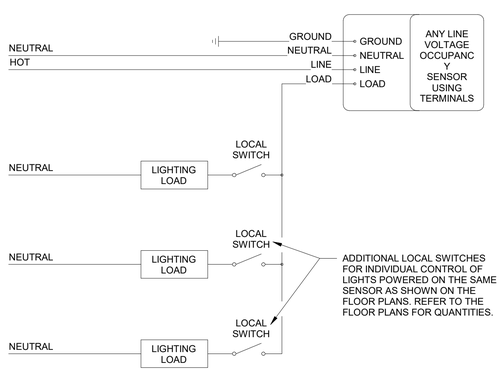

LINE VOLTAGE OCCUPANCY SENSOR DETAIL

NOT TO SCALE

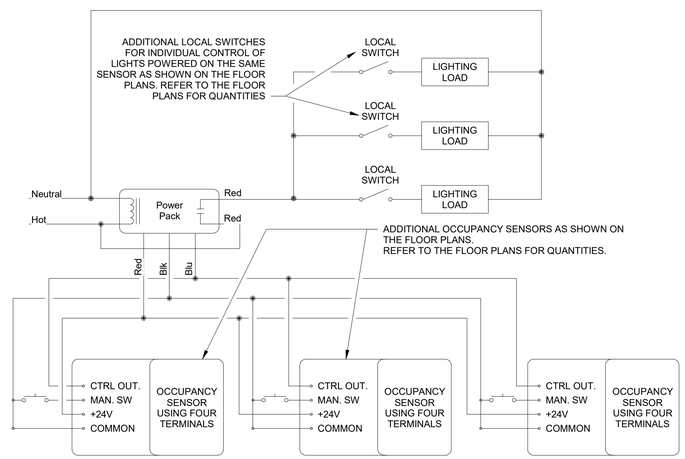

LOW VOLTAGE OCCUPANCY SENSOR DETAIL

NOT TO SCALE

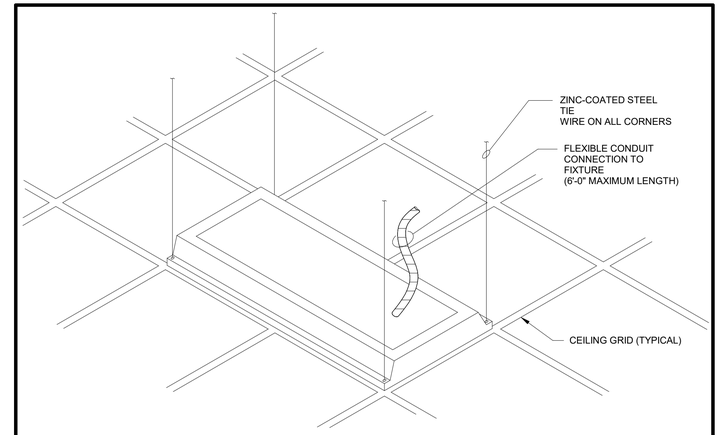

NOTES:
1. CLIP FIXTURE TO GRID ON ALL FOUR (4) CORNERS FOR ADDITIONAL SUPPORT AND AS REQUIRED BY THE MANUFACTURER. HANG FIXTURE LEVEL.

TYPICAL RECESSED FIXTURE SUPPORT DETAIL

NOT TO SCALE

PLEASE READ BEFORE OPENING ELECTRONICALLY FILED PDFS/PACKAGES:
DRAWINGS AND DESIGN IS ORIGINAL WORK PRODUCED BY NORMAN SMITH ARCHITECTURE AND ITS CONSULTANTS AND SUBCONTRACTORS (NSA) AND IS PROTECTED BY COPYRIGHT LAW AND OTHER INTELLECTUAL PROPERTY LAWS AND TREATIES. USE OF THE DRAWINGS AND DESIGN IS LIMITED TO THE PURPOSES AGREED TO BY NSA AND THE OWNER IN THE PROJECT CONTRACT DOCUMENTS. ANY OTHER USE OR REPRODUCTION IS PROHIBITED WITHOUT THE PRIOR WRITTEN CONSENT OF NSA.
DRAWINGS AND DESIGN MAY BE INCOMPLETE WITHOUT ALL PAGES/PARTS/SECTIONS OF THE PROJECT MANUAL AND ALL ADDENDA, AND MAY NOT BE RELIED UPON FOR ANY PURPOSE WITHOUT THE ENTIRE PROJECT MANUAL AND ALL ADDENDA. THE PLANS AND SPECIFICATIONS ARE INSTRUMENTS OF SERVICE THROUGH WHICH THE BENEFICIAL USE AND OCCUPANCY OF THE PROPERTY DESCRIBED THEREIN MAY BE OBTAINED. THE PLANS AND SPECIFICATIONS ARE NOT A SALE OF THE PROPERTY DESCRIBED THEREIN.
DRAWINGS AND DESIGN MAY BE INCOMPLETE OR INCORRECT IF NOT PRINTED ON ARCH D (24" X 36") PAPER. NSA DISCLAIMS ANY RESPONSIBILITY FOR ANY ERRORS OR OMISSIONS WHICH MAY BE CREATED BY PRINTING ON PAPER OTHER THAN ARCH D (24" X 36") PAPER.
IF THIS FILE IS A VIDEO OR VIDEO-AUDIO PRESENTATION PRESENTATION, THE FILE IS FINAL OR OFFICIAL ONLY WHEN PLAYED IN SYNCHRONOUS MODE. ANY OTHER USE OR PLAYBACK MODE MAY RESULT IN LOSS OF SYNCHRONIZATION AND OTHER ERRORS. THE PLAYBACK MODE IS THE SOLE RESPONSIBILITY OF THE PARTY PLAYING THE FILE.
DRAWINGS AND DESIGN MAY BE INCOMPLETE OR INCORRECT IF THEY ARE OPENED IN ANY SOFTWARE OTHER THAN THE LATEST VERSION OF ADOBE ACROBAT READER OR ADOBE ACROBAT PRO. NSA DISCLAIMS ANY RESPONSIBILITY FOR ANY ERRORS OR OMISSIONS WHICH MAY BE CREATED BY OPENING IN ANY SOFTWARE OTHER THAN THE LATEST VERSION OF ADOBE ACROBAT READER OR ADOBE ACROBAT PRO.
VERIFY ALL ELEVATIONS AND FIELD CONDITIONS PRIOR TO CONTRACTING WITH THE OWNER'S PROJECT MANAGER OF ANY VARIANCE BETWEEN PLAN, SPECIFICATION, AND FIELD CONDITIONS.

No.	Date	Revision Notes	Zone	Appr

No.	Date	Issue Notes
2	01/3/2024	release for bid
1	12/7/2023	permit subm

Date
Revision
Project No. 23703.culpeper
Drawing Code
CAD File Name
Plot Date
Designed By
Drawn By
Checked By
Reviewed By
Submitted By
Project Manager

Design Firm
NORMAN SMITH ARCHITECTURE
1341 H Street, Washington, DC 20002-4906
3637 Slate Mills Road, Sperryville, VA 22740
T 202.462.5888 www.normansmitharchitecture.com
Consultant
VALLEY ENGINEERING
4901 Crowe Drive, Mount Crawford, VA 22841
T 540.434.6365 www.valleyesp.com

Project Title
Culpeper County
Community Pool Project
16388 Competition Drive
Culpeper, VA

Sheet Title
ELECTRICAL DETAILS

Scale
NTS

Sheet No.
E500.2
of

COMMONWEALTH OF VIRGINIA
JASON P. DAMICO
Lic. No. 048680
01/03/2024
PROFESSIONAL ENGINEER

☐ CONSTRUCTION NOTES

1. PROPOSED LOCATION OF THE POWER COMPANY PROVIDED PAD MOUNTED TRANSFORMER AND BASE.
2. PROPOSED ROUTE OF THE ELECTRICAL SECONDARY SERVICE. REFER TO THE FOUR WAY ELECTRICAL SECONDARY SERVICE ENTRANCE DIRECT BURY DETAIL ON SHEET E500.1 FOR MORE INFORMATION.
3. TELECOMMUNICATIONS SERVICE CONDUITS. REFER TO THE TELEPHONE AND CATV SERVICE DIRECT BURY CONDUIT DETAIL ON SHEET E500.1 FOR MORE INFORMATION. EXTEND TO A POINT ON THE PROPERTY AS REQUIRED BY THE UTILITY PROVIDER.
4. LOCATION OF CONCESSION STOR. 118.
5. LOCATION OF CLOS. 111.
6. PROVIDE A NEW EQUIPMENT POLE AS SHOWN. POLE SHALL BE SIMILAR TO ENERGY LIGHT CATALOG #10A4SS125. REFER TO THE POLE BASE DETAIL ON SHEET E500.1 FOR MORE INFORMATION. POLE SHALL BE BONDED TO THE POOL BONDING RING WITH A #8AWG COPPER BONDING CONDUCTOR.

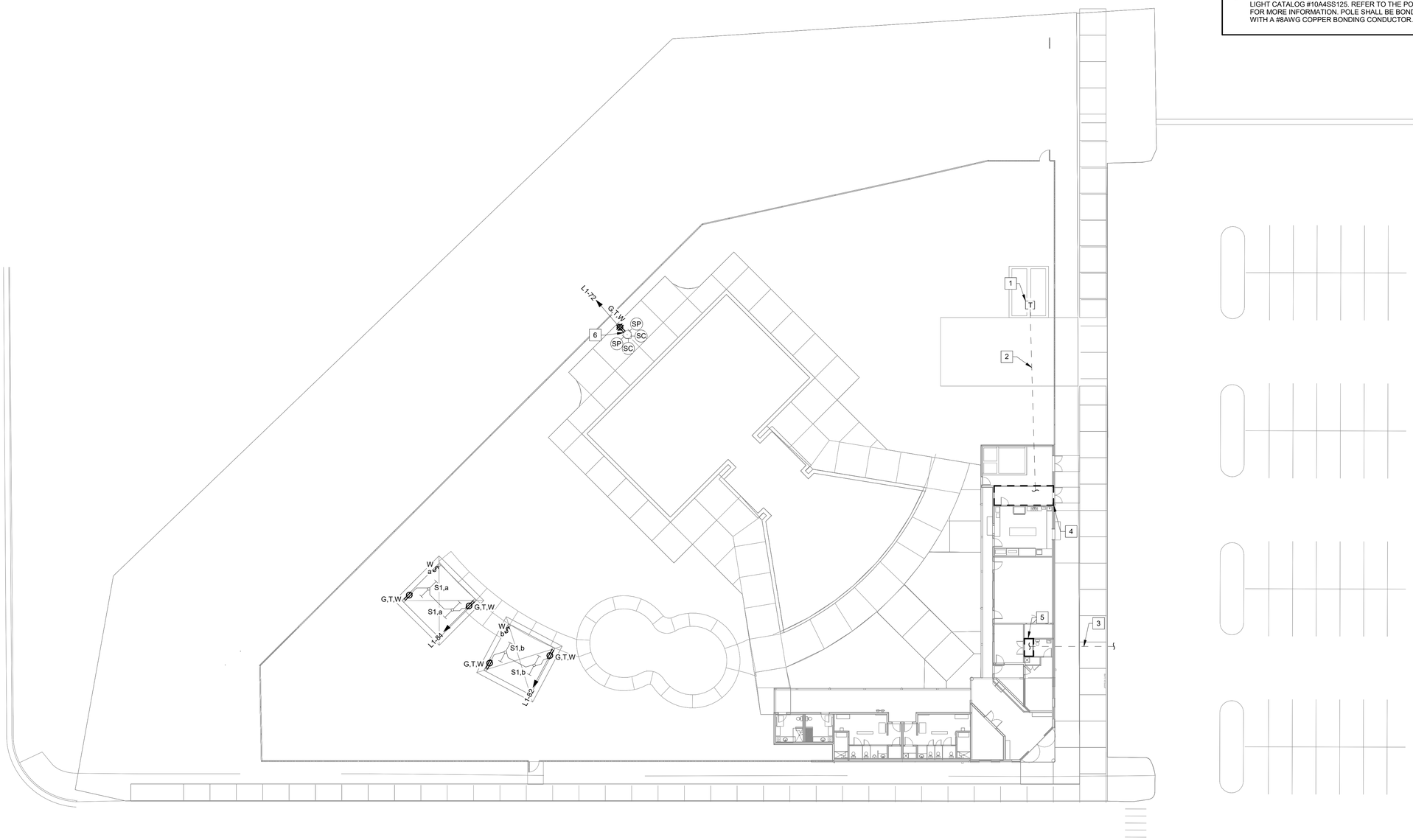

ELECTRICAL SITE PLAN

SCALE: 1" = 20'-0"

COMMONWEALTH OF VIRGINIA
JASON P. DAMICO
Lic. No. 048680
01/03/2024
PROFESSIONAL ENGINEER

DRAWINGS AND DESIGN © 2023 NORMAN SMITH ARCHITECTURE.
DRAWINGS AND SPECIFICATIONS AND THE IDEAS DESIGNS AND ARRANGEMENTS REPRESENTED THEREIN ARE THE EXCLUSIVE PROPERTY OF THE ARCHITECT AND ARE NOT TO BE DISCLOSED TO OTHERS OR USED FOR OTHER PROJECTS OR ADDITIONS TO THIS PROJECT, EXCEPT BY WRITTEN AGREEMENT WITH THE ARCHITECT. ALL REPRODUCTIONS, COPIES OR SUBSTANTIALLY MODIFIED BY THE OWNER OR OTHERS WITHOUT WRITTEN CONSENT OF THE ARCHITECT ARE PROHIBITED.

CONTRACTOR BIDDERS PLACING ITEMS ON SALE, SUBCONTRACTS OR ORDERS BEFORE RECEIPT OF NOTICE TO PROCEED FROM THE OWNER DO SO AT THEIR OWN RISK.

VERIFY THAT THEY ARE USING ALL OF THE CORRECT AND CURRENT DRAWINGS AND SPECIFICATIONS. THE ARCHITECT ASSUMES NO RESPONSIBILITY TO CONTRACTORS USING OBSOLETE DRAWINGS OR SPECIFICATIONS.

VERIFY ALL EXISTING AND FIELD CONDITIONS AND DIMENSIONS. NOTIFY THE ARCHITECT IMMEDIATELY OF ANY DISCREPANCIES OR CONDITIONS THAT MAY REQUIRE CHANGES TO THE DESIGN. DO NOT PROCEED WITH CONSTRUCTION UNTIL THE OWNER'S PROJECT MANAGER OF ANY VARIANCE BETWEEN ACTUAL AND DRAWN CONDITIONS.

PLEASE READ BEFORE USING ELECTRONIC FILES: NSA PROVIDES:

ELECTRONIC FILES AS A GENERAL CONVENIENCE TO OTHERS WHO MAY WISH TO REVIEW THE PROJECT OR A SUBMITTALITY. THE DRAWINGS AND SPECIFICATIONS ON THE ARCHITECT'S WEBSITE ARE THE ONLY OFFICIAL VERSION. ELECTRONIC FILES MAY BE OUTDATED, INCOMPLETE, OR CORRUPTED. USE OF ELECTRONIC FILES IS AT YOUR OWN RISK. NSA MAKES NO REPRESENTATIONS OR WARRANTIES OF ANY KIND REGARDING THE ACCURACY OF ELECTRONIC FILES, OR THEIR FITNESS FOR ANY PARTICULAR PURPOSE. YOU ARE ADVISED TO VERIFY ALL INFORMATION REPRESENTED IN ELECTRONIC FILES BY COMPARING IT TO THE PRINTED DOCUMENTS. NSA SHALL NOT BE LIABLE FOR ANY DAMAGES ARISING FROM THE USE OF ELECTRONIC FILES, INCLUDING, BUT NOT LIMITED TO, INCIDENTAL AND CONSEQUENTIAL DAMAGES, TO THE FULLEST EXTENT PERMITTED BY LAW. NSA MAKES NO REPRESENTATION THAT THE DESIGN, SPECIFICATIONS, OR OTHER INFORMATION PROVIDED IN ELECTRONIC FORMAT COMPLIES WITH LOCAL, STATE, OR FEDERAL CODES, LAWS, OR REGULATIONS. YOU ARE ADVISED TO VERIFY THAT THE INFORMATION COMPLIES WITH ALL GOVERNING CODES AND REGULATIONS.

IF THERE EXISTS AN ISSUE OR DISPUTE WITH THE FOREGOING, THE PARTIES SHALL BE OBLIGED TO MEET AND DISCUSS IN GOOD FAITH THE ISSUE OR DISPUTE IN ORDER TO ATTEMPT TO RESOLVE IT AMICABLY. IF THE PARTIES ARE UNABLE TO RESOLVE THE ISSUE OR DISPUTE AMICABLY, THE PARTIES AGREE TO SUBMIT THE ISSUE OR DISPUTE TO BINDING ARBITRATION PURSUANT TO THE AMERICAN ARBITRATION ASSOCIATION RULES AND PROCEDURES FOR CONSTRUCTION INDUSTRY DISPUTES.

No.	Date	Issue Notes
2	01/3/2024	release for bid
1	12/7/2023	permit subm

No.	Date	Revision Notes	Zone	Appr

Designed By | Date
Drawn By | Revision
Checked By | Project 23703.culpeper
Reviewed By | Drawing Code
Submitted By | CAD File Name
Project Manager | Plot Date

Design Firm
NORMAN SMITH ARCHITECTURE
1341 H Street, Washington, DC 20002-4806
3637 Slate Mills Road, Sperryville, VA 22740
T 202.462.5888 www.normansmitharchitecture.com

Consultant
VALLEY ENGINEERING
4901 Crowe Drive, Mount Crawford, VA 22841
T 540.434.6365 www.valleyesp.com

Project Title
Culpeper County
Community Pool Project
16388 Competition Drive
Culpeper, VA

Sheet Title
ELECTRICAL SITE PLAN

Scale 1" = 20'-0"

Sheet No.
E600.1
of

PLUMBING LEGEND

ALL SYMBOLS INDICATED MAY NOT APPEAR ON THESE CONTRACT DRAWINGS

	EXISTING
	EXISTING TO BE REMOVED
	ITEM TO BE PROVIDED
	"DEMOLITION TO THIS POINT" SYMBOL
	"NEW CONSTRUCTION AT THIS POINT" SYMBOL
	DOMESTIC COLD WATER SUPPLY
	DOMESTIC HOT WATER SUPPLY
	DOMESTIC HOT WATER RECIRCULATION
SAN	SANITARY WASTE
	SANITARY WASTE VENT
GW	GREASE WASTE
SW	SOFTENED WATER
ST	STORM DRAIN
SST	SECONDARY STORM DRAIN
G	GAS, NATURAL PROPANE
FP	SPRINKLER PIPING
ACID	PVDF ACID WASTE PIPING
A	COMPRESSED AIR
PD	PUMP DISCHARGE
	PITCH DOWN IN DIRECTION OF ARROW
	DIRECTION OF FLOW
	PIPE TURNING DOWN
	PIPE TURNING UP
	RISER UP OR DOWN
	TEE AND ELBOW UP
	TEE AND ELBOW DOWN
	TEE UP
	45 DOWN
	UNION
	FLANGE
	PIPE CAP
	PIPE CONCENTRIC REDUCER/INCREASER
	PIPE ECCENTRIC REDUCER/INCREASER
	BUTTERFLY VALVE
	BALL VALVE
	GATE VALVE
	PLUG VALVE
	GLOBE VALVE
	NEEDLE VALVE
	GAS COCK
	PRESSURE REDUCING VALVE
	PRESSURE RELIEF/SAFETY VALVE
	TWO WAY CONTROL VALVE
	THREE WAY CONTROL VALVE
S	SOLENOID VALVE
	FLOW METER
	FLEX CONNECTOR
	SWING GATE CHECK VALVE
	SPRING CHECK VALVE
	BACKFLOW PREVENTER
	CIRCUIT SETTER
	CIRCUIT SENSOR
	EXPANSION LOOP
	AUTOFLOW CONTROL VALVE
MV	MANUAL AIR VENT
AAV	AUTOMATIC AIR VENT
	PRESSURE GAUGE WITH GAUGE COCK
	SIPHON
	PRESSURE\TEMPERATURE TEST PORT
	HOSE END DRAIN
	STRAINER
	STRAINER WITH BLOW DOWN
	THERMOMETER
	SILL COCK
	HOSE BIBB
	WALL HYDRANT
	OVERFLOW DRAIN DOWN SPOUT
	FLOOR DRAIN
	ROOF DRAIN
CO	FLOOR CLEANOUT
	HORIZONTAL CLEANOUT ON MAIN
WCO	WALL CLEANOUT
	P-TRAP
	PUMP
	VENT THRU ROOF
"X"	WATER HAMMER ARRESTOR, P.D.I. SIZE INDICATED
T P	TRAP PRIMER WITH BALL VALVE
PS	PRESSURE SWITCH
FS	FLOW SWITCH
HS	HOSE STATION
1	CONSTRUCTION NOTE
1	DEMOLITION NOTE
110	ROOM NUMBER
SX P1	RISER NO / SHEET NO WHERE RISER SHOWN — SANITARY (WASTE) RISER
WX P1	RISER NO / SHEET NO WHERE RISER SHOWN — WATER RISER
< >	FLOW RATE IN GPM U.N.O.
(B)	INDICATES PIPING INSTALLED IN BEAM SPACE
P-X	PLUMBING FIXTURE DESIGNATION

MPE DESIGN SUMMARY

PROJECT INFORMATION

PROJECT NAME:	CULPEPER COMMUNITY POOL
ADDRESS:	16388 COMPETITION DRIVE CULPEPER, VA
PROPOSED USE:	ASSEMBLY GROUP A-5
OWNER:	CULPEPER COUNTY
OWNER CONTACT:	ANDREW HARDY
VE PROJ NO.:	12992-9

APPLICABLE CODES

BUILDING CODE:	VIRGINIA CONSTRUCTION CODE: 2018
MECHANICAL CODE:	VIRGINIA MECHANICAL CODE: 2018
PLUMBING CODE:	VIRGINIA PLUMBING CODE: 2018
ELECTRICAL CODE:	NFPA 70 NATIONAL ELECTRICAL CODE: 2017
FIRE ALARM CODE:	VIRGINIA STATEWIDE FIRE PREVENTION CODE: 2018
LIFE SAFETY CODE:	NFPA 101 LIFE SAFETY CODE: 2018
ACCESSIBILITY CODE:	ICC/ANSI A117.1 STANDARDS ON ACCESSIBLE AND USABLE BUILDING AND FACILITIES: 2009
ENERGY CODE:	ASHRAE/IESNA 90.1-2016 ENERGY STANDARD FOR BUILDINGS EXCEPT LOW-RISE RESIDENTIAL BUILDINGS
	VIRGINIA ENERGY CONSERVATION CODE: 2018
GAS CODE:	VIRGINIA FUEL GAS CODE: 2018
POOL CODE:	VIRGINIA SWIMMING POOL AND SPA CODE: 2018

PROJECT TEAM

PROJECT MANAGER:	JASON DAMICO
PROJECT TEAM:	
MECHANICAL ENGINEER	CHRIS PERRIN
PLUMBING ENGINEER	MATT SHOCKEY
ELECTRICAL ENGINEER	JASON DAMICO
REVIT/CAD PROJECT LEAD	TIM HOUSDEN

DRAWING LIST

P000.1	PLUMBING LEGENDS
P000.2	PLUMBING ABBREVIATIONS AND NOTES
P000.3	PLUMBING SPECIFICATIONS
P000.4	PLUMBING SPECIFICATIONS
P000.5	PLUMBING SPECIFICATIONS
P000.6	PLUMBING SPECIFICATIONS
P000.7	PLUMBING SCHEDULES
P000.8	PLUMBING SCHEDULES
P100.0	PLUMBING OVERALL PLAN
P100.1	PLUMBING BELOW GRADE PLAN - AREA 'A'
P100.2	PLUMBING BELOW GRADE PLAN - AREA 'B'
P100.3	PLUMBING BELOW GRADE PLAN - AREA 'C'
P200.1	PLUMBING PLAN - AREA 'A'
P200.2	PLUMBING PLAN - AREA 'B'
P200.3	PLUMBING PLAN - AREA 'C'
P500.1	PLUMBING DETAILS
P500.2	PLUMBING DETAILS
P500.3	PLUMBING DETAILS
P500.4	PLUMBING DETAILS
P500.5	PLUMBING DETAILS
P500.6	PLUMBING DETAILS

COMMONWEALTH OF VIRGINIA
PHILLIP L. GENTRY
Lic. No. 025757
01/03/2024
PROFESSIONAL ENGINEER

DRAWINGS AND DESIGN © 2024 NORMAN SMITH ARCHITECTURE.
DRAWINGS AND SPECIFICATIONS AND THE IDEAS DESIGNS AND ARRANGEMENTS REPRESENTED THEREIN ARE THE PROPERTY OF THE ARCHITECT AND REMAIN, WITHOUT EXCEPTION, THE PROPERTY OF THE ARCHITECT AND WERE PREPARED FOR USE ON THIS PROJECT ONLY AND NOT PRIOR TO CONTRACT BETWEEN PARTIES TO BE MODIFIED BY THE ARCHITECT, AND NOT TO BE USED BY ANYONE EXCEPT THE OWNER OR ARCHITECT, EXCEPT BY WRITTEN AGREEMENT WITH THE ARCHITECT. VERIFY THAT THE AHJ HAS LISTED ALL OF THE CORRECT AND CURRENT ADOPTED CODES AND AMENDMENTS PRIOR TO CONTRACTING TO THE SPECIFICATIONS. ADDENDA, RFIS, CHANGE ORDERS AND OTHER DOCUMENTS MAY HAVE MODIFIED THE CONTRACT DOCUMENTS. VERIFY ALL ELEVATIONS AND FIELD CONDITIONS PRIOR TO CONTRACTING WITH THE WORK. REPORT ANY ERRORS, OMISSIONS OR CONFLICTS TO THE OWNER'S PROJECT MANAGER OR ARCHITECT. DO NOT SCALE DRAWINGS. ALL DIMENSIONS TO BE VERIFIED IN THE FIELD. ALL WORK SHALL BE INSTALLED IN ACCORDANCE WITH THE MANUFACTURER'S RECOMMENDATIONS AND ALL APPLICABLE CODES AND REGULATIONS. ALL EQUIPMENT INSTALLED IN PLENUMS, OR OTHERWISE IN AIR STREAMS, MUST BE RATED FOR USE IN SUCH SPACES. ALL MATERIALS AND EQUIPMENT SHALL BE NEW AND OF GOOD QUALITY. ALL WORK SHALL BE GUARANTEED FOR A PERIOD OF ONE YEAR AFTER FINAL ACCEPTANCE.

No.	Date	Issue Notes
2	01/3/2024	release for bid
1	12/7/2023	permit subm

No.	Date	Revision Notes	Zone	Appr

Designed By | Date
Drawn By | Revision
Checked By | Project 23703.culpeper
Reviewed By | Drawing Code
Submitted By | CAD File Name
Project Manager | Plot Date

Design firm
NORMAN SMITH ARCHITECTURE
1341 H Street, Washington, DC 20002-4906
3637 Slate Mills Road, Sperryville, VA 22740
T 202.462.5888 www.normansmitharchitecture.com

Consultant
VALLEY ENGINEERING
4901 Crowe Drive, Mount Crawford, VA 22841
T 540.434.5365 www.valleyesp.com

Project Title
Culpeper County
Community Pool Project
16388 Competition Drive
Culpeper, VA

Sheet Title
PLUMBING LEGENDS

Scale
NTS

Sheet No.
P000.1
of

CEILING COORDINATION NOTES

1. INSTALLATION OF ALL CEILING UTILITIES SHALL BE COORDINATED WITH ALL TRADES AND WITH STEEL PENETRATIONS.

2. CONFLICTS BETWEEN TRADES SHALL BE RESOLVED USING THE FOLLOWING PRIORITIZATION:
   a. HVAC DUCTWORK MAINS
   b. STORM PIPING
   c. HVAC BRANCH DUCTS
   d. HWS/HWR PIPING
   e. DCW/DHW/DHWR PIPING
   f. VENT PIPING
   g. CONDUIT

3. REGISTERS, GRILLES, AND DIFFUSERS SHALL NOT BE RELOCATED WITHOUT APPROVAL OF MECHANICAL ENGINEER AND ARCHITECT.

4. LIGHTS SHALL NOT BE RELOCATED WITHOUT APPROVAL OF THE ELECTRICAL ENGINEER AND ARCHITECT.

PLUMBING GENERAL NOTES

1. ALL WORK SHALL CONFORM TO THE REGULATIONS OF APPLICABLE FEDERAL, STATE, LOCAL LAWS, ORDINANCES, AND CODES. PLUMBING WORK SHALL BE IN ACCORDANCE WITH THE LATEST ADOPTED EDITION OF THE INTERNATIONAL PLUMBING CODE AND ANY APPROVED SUPPLEMENTS TO THAT CODE.

2. THE DRAWINGS ILLUSTRATE GENERAL SCOPE AND ARRANGEMENT OF PLUMBING SYSTEMS. THEY SHALL BE FOLLOWED AS CLOSELY AS ACTUAL CONDITIONS ALLOW. PLUMBING CONTRACTOR SHALL PROVIDE FITTINGS AND OFFSETS IN PIPING TO AVOID FIELD INTERFERENCES.

3. ELECTRICAL DATA ILLUSTRATED IS THAT PUBLISHED BY THE MANUFACTURER.

4. NOT ALL SPECIFICATIONS WILL BE APPLICABLE TO THIS PROJECT. USE SPECIFICATION SECTIONS AND SUB-SECTIONS AS THEY APPLY TO THE PLUMBING SYSTEMS BEING INSTALLED.

5. INSTALL ALL EQUIPMENT MATERIAL AND ACCESSORY DEVICES PER MANUFACTURERS INSTRUCTIONS UNLESS OTHERWISE DIRECTED BY THE OWNER/ENGINEER. ENSURE MAINTENANCE ACCESS IS PROVIDED.

6. THE CONTRACTOR IS RESPONSIBLE FOR PRE-PLANNING ALL UTILITY ROUTING, PROVIDING OFFSETS, INSTALLING SLEEVES, ETC. PER THEIR MEANS-AND-METHODS AS NECESSARY TO PROVIDE THE DESIGN INDICATED.

7. VERIFY PLANNED LOCATION OF ALL UTILITIES BEFORE LAYING OUT AND MAKING CONNECTIONS. REPORT ANY INCONSISTENCIES TO THE OWNER/ENGINEER BEFORE COMMENCING WORK. CONTRACTORS SHALL BE RESPONSIBLE FOR ANY ERROR RESULTING FROM FAILURE TO EXERCISE THESE PRECAUTIONS.

8. UNLESS SPECIFICALLY PROVIDED OTHERWISE, ALL MATERIALS AND EQUIPMENT FURNISHED FOR PERMANENT INSTALLATION SHALL CONFORM TO ALL APPLICABLE STANDARDS AND BE NEW, CURRENT DESIGN, UNUSED, AND UNDAMAGED.

9. EXCEPT WHERE OTHERWISE INDICATED ON THE DRAWINGS, PIPING IS SHOWN ON THE FLOOR WHERE IT ACTUALLY OCCURS IN THE BUILDING.

10. PIPING SHALL TYPICALLY BE RUN ABOVE THE CEILINGS AND CONCEALED WITHIN WALLS, EXCEPT FOR UNDER SLAB DRAINAGE OR IN DESIGNATED MECHANICAL ROOMS.

11. ALL SANITARY AND STORM PIPING 3" AND LARGER SHALL BE INSTALLED AT 1/8" PER FOOT SLOPE UNLESS OTHERWISE NOTED. SANITARY PIPING 2-1/2" OR SMALLER SHALL BE INSTALLED AT 1/4" PER FOOT SLOPE UNLESS OTHERWISE NOTED.

12. ALL DOMESTIC WATER SYSTEMS, WHERE NEW OR RELOCATED AND PLACED BACK IN SERVICE, SHALL BE DISINFECTED PRIOR TO UTILIZATION PER SECTION 610 OF THE INTERNATIONAL PLUMBING CODE. PREPARE TEST SAMPLES AND SUBMIT TO A TESTING LABORATORY. PRESENT OWNER AND ENGINEER WITH TEST RESULTS.

13. ALL PIPING SHALL BE PRESSURE TESTED AT THE WORKING PRESSURE INDICATED FOR A PERIOD OF 24 HOURS. STOP-LEAK COMPOUNDS WILL NOT BE ALLOWED.

14. ALL PIPE PENETRATIONS THROUGH FLOORS OR FIRE RATED WALLS SHALL BE PROVIDED WITH SLEEVES, FIRE SAFING MATERIAL, AND CAULKING TO MATCH THE FIRE RATING OF THE RESPECTIVE FLOORS OR WALLS. REFER TO ARCHITECTURAL DRAWINGS FOR APPROPRIATE WALL RATINGS.

15. THE CONTRACTOR SHALL MAKE ALL EQUIPMENT AND FIXTURE FINAL CONNECTIONS FOR BOTH CONTRACTOR AND OWNER PROVIDED FIXTURES. PROVIDE THE NECESSARY ADAPTERS, FITTINGS, VALVES, DEVICES, ETC. FOR A COMPLETE OPERABLE SYSTEM. THE CONTRACTOR SHALL REFER TO THE ARCHITECTURAL DOCUMENTS FOR ADDITIONAL INFORMATION AND SHALL COORDINATE EXACT LOCATIONS OF ALL FIXTURES WITH ARCHITECTURAL DRAWINGS.

16. NO SANITARY, SOIL, OR WASTE PIPE SHALL EXTEND MORE THAN 2'-0" TO A DEAD END. CLEANOUTS SHALL BE PROVIDED AS REQUIRED BY THE LOCAL AUTHORITY.

17. ALL PIPING SHALL BE SUPPORTED FROM STRUCTURE WITH UL LISTED HANGERS AND SUPPORTS SUITABLE FOR THE INTENDED INSTALLATION. DESIGN, SELECTION, SPACING, AND APPLICATION OF HANGERS AND SUPPORTS SHALL COMPLY WITH ANSI B31.1 AND MSS SP-69.

18. FIXTURES SHALL BE PROTECTED DURING CONSTRUCTION FROM DIRT AND PHYSICAL DAMAGE. DIRTY FIXTURES SHALL BE CLEANED AND DAMAGED PARTS OF FIXTURES SHALL BE REPLACED.

19. ALL SANITARY VENT PIPING EXTENDING ABOVE A ROOF SHALL BE AT LEAST 10 FEET AWAY FROM ALL FAN AND ROOFTOP UNIT INTAKE OPENINGS.

20. ON SLOPED ROOF AREAS, ALL OPEN SANITARY VENT PIPES WHICH EXTEND THROUGH A ROOF SHALL BE TERMINATED AT LEAST SIX INCHES (6") ABOVE THE ROOF.

21. INSTALL FLOOR DRAINS A MINIMUM OF 1/8" LOWER THAN THE FINISHED FLOOR. TAPER CONCRETE TO THE DRAIN.

22. DURING CONSTRUCTION, AN ACCURATE RECORD OF ALL DEVIATIONS BETWEEN WORK SHOWN ON THE DRAWINGS AND THAT WHICH IS ACTUALLY INSTALLED SHALL BE MAINTAINED. THESE DEVIATIONS SHALL BE NOTED NEATLY AND ACCURATELY IN RED INK ON A SET OF PLUMBING PRINTS. WHEN ALL REVISIONS HAVE BEEN SHOWN ON THESE PRINTS TO INDICATE THE WORK AS ACTUALLY INSTALLED, THE PRINTS SHALL BE DELIVERED TO THE OWNER IN TRIPLICATE.

23. INSTALL PIPING IN MECHANICAL AND UTILITY SPACES AS HIGH AS POSSIBLE. PROVIDE ADEQUATE CLEARANCE FOR REMOVAL AND SERVICING OF ALL EQUIPMENT INCLUDING MAJOR EQUIPMENT SUCH AS BOILERS.

24. CONTRACTOR IS RESPONSIBLE FOR PROVIDING ALL ISOLATION VALVES NECESSARY TO COMPLETE THE DESIGN INDICATED.

25. ALL DOMESTIC WATER PIPING, VALVES, AND DEVICES SHALL BE COMPLIANT WITH THE 2011 REDUCTION OF LEAD IN DRINKING WATER ACT. THIS INCLUDES ALL PIPING FOR DISTRIBUTION OR CONNECTION TO FIXTURES OR EQUIPMENT. THE CONTRACTOR SHALL COORDINATE EXEMPTIONS OF ANY NON-POTABLE USES (EX. SHOWER VALVES, BACKFLOW PREVENTERS FOR MECHANICAL SYSTEM MAKEUP WATER) WITH THE AHJ AND OBTAIN APPROVAL BEFORE ORDERING MATERIALS OR INSTALLING COMPONENTS.

26. PROJECT REPORTING:

    26.1.1. DURING CONSTRUCTION, THE CONTRACTOR SHALL KEEP AN ACCURATE RECORD OF ALL DEVIATIONS IN THE WORK BETWEEN THAT SHOWN ON THE DRAWINGS AND SPECIFICATIONS AND ITS ACTUAL INSTALLATION.

    26.1.2. THROUGHOUT THE PROGRESS OF THE WORK, THE CONTRACTOR SHALL MAINTAIN AT THE SITE, ONE RECORD COPY OF ALL DRAWINGS, SPECIFICATIONS, ADDENDA, RFI'S, CHANGE ORDERS, SHOP DRAWINGS, AND SUBMITTALS, MARKED CURRENTLY TO RECORD ALL CHANGES AND DEVIATIONS MADE DURING CONSTRUCTION. THIS SET SHALL THOROUGHLY INDICATE ALL FIELD CHANGES, MINOR AND OTHERWISE, SO THAT THE OWNER IS PROVIDED A COMPLETE RECORD OF THE ACTUAL BUILT CONDITIONS OF THE PROJECT.

    26.1.2.1. THE AS-BUILT DRAWINGS SHALL REFLECT THE ACTUAL INSTALLED CONDITIONS AND SHALL BE NEATLY AND ACCURATELY DRAWN TO SCALE TO MATCH THE DRAFTING OF THE CONSTRUCTION DOCUMENTS. THE AS-BUILT DRAWINGS SHALL BE PROVIDED IN A DIGITAL PDF FILE FORMAT.

    26.1.2.2. SUBJECT TO THE OWNER'S PRIOR APPROVAL, THE AS-BUILT DRAWINGS MAY BE A NEATLY ANNOTATED, HARD-COPY DRAWING SET THAT IS SCANNED TO A PDF DIGITAL FORMAT.

    26.1.2.3. SUBMIT ALL RECORD DOCUMENTS TO THE OWNER AND ARCHITECT AT THE COMPLETION OF THE WORK AS PART OF THE PROJECT CLOSE-OUT PROCESS.

    26.1.2.4. AS-BUILT REQUIREMENTS IN THIS SECTION TAKE PRECEDENCE OVER THOSE OF OTHER DRAWINGS/SECTIONS UNLESS OTHERWISE SPECIFICALLY NOTED.

27. SUBMITTALS:

    1. REFER TO THE ARCHITECTURAL DIVISION 00 AND 01 SPECIFICATIONS FOR ADDITIONAL SUBMITTAL REQUIREMENTS AND PROCESSES.

    2. THE CONTRACTOR SHALL SUBMIT INFORMATION TO THE OWNER DEMONSTRATING COMPLIANCE OF PRODUCTS AND INSTALLATION OF DRAWINGS AND SPECIFICATIONS. THIS INFORMATION SHALL INCLUDE BUT NOT LIMITED TO: CATALOG DATA, PERFORMANCE DATA, ELECTRICAL REQUIREMENTS INCLUDING OVER CURRENT PROTECTION DATA, PRODUCT DIMENSIONS, SPECIAL INSTALLATION REQUIREMENTS, AND RECOMMENDED CLEARANCES.

    3. RESUBMISSION: CONTRACTOR SHALL CHANGE OR CORRECT SUBMITTALS AS REQUIRED BY THE OWNER AND RESUBMIT UNTIL APPROVED. THE CONTRACTOR SHALL ALSO INDICATE ANY CHANGES WHICH HAVE BEEN MADE OTHER THAN THOSE REQUESTED BY THE OWNER OR ENGINEER.

28. PROVIDE A MINIMUM ONE YEAR WARRANTY TO COVER ALL MATERIALS, EQUIPMENT, AND LABOR. WARRANTY SHALL START AFTER FINAL ACCEPTANCE BY THE OWNER AND IT SHALL COVER COSTS ASSOCIATED WITH ANY REPAIRS OR REPLACEMENTS CAUSED BY DEFECTIVE WORKMANSHIP OR FAULTY MATERIALS OR EQUIPMENT.

PLUMBING ABBREVIATIONS

ALL ABBREVIATIONS INDICATED MAY NOT APPEAR ON THESE CONTRACT DRAWINGS

@	AT	HT	HEIGHT
A	AMPERE	HVAC	HEATING, VENTILATING, AND AIR CONDITIONING
ABV	ABOVE	I.E.	INVERT ELEVATION
AFC	ABOVE FINISHED CEILING	KW	KILOWATTS
AFF	ABOVE FINISHED FLOOR	LAV	LAVATORY
AFG	ABOVE FINISHED GRADE	LWT	LEAVING WATER TEMPERATURE
AL	ALUMINUM	MAX	MAXIMUM
ALT	ALTERNATE	MC	MECHANICAL CONTRACTOR
ANSI	AMERICAN NATIONAL STANDARDS INSTITUTE	MFR	MANUFACTURER
APPROX	APPROXIMATE	MIN	MINIMUM
ARF	ABOVE RAISED FLOOR	N.C.	NORMALLY CLOSED
AVG	AVERAGE	NIC	NOT IN CONTRACT
BAS	BUILDING AUTOMATION SYSTEM	N.O.	NORMALLY OPEN
BEL	BELOW	NOM	NOMINAL
BFC	BELOW FINISHED CEILING	NPS	NOMINAL PIPE SIZE
BFF	BELOW FINISHED FLOOR	NTS	NOT TO SCALE
BFP	BACKFLOW PREVENTER	OEM	ORIGINAL EQUIPMENT MANUFACTURER
BLDG	BUILDING	P	PUMP
BOM	BILL OF MATERIALS	PD	PRESSURE DROP
BRF	BELOW RAISED FLOOR	P.D.I.	PLUMBING AND DRAINAGE INSTITUTE
CLG	CEILING	PRV	PRESSURE REDUCING VALVE
CO	CLEANOUT	PSI	POUNDS PER SQUARE INCH
DCW	DOMESTIC COLD WATER	RD	ROOF DRAIN
DEMO	DEMOLITION	REFRIG	REFRIGERATOR
DHW	DOMESTIC HOT WATER	REQ	REQUIRED
DHWR	DOMESTIC HOT WATER RECIRCULATION	RL	ROOF LEADER
DHWRP-1	DOMESTIC HOT WATER RECIRCULATING PUMP	SAN	SANITARY WASTE
DIA	DIAMETER	SF	SQUARE FEET
DIAG	DIAGRAM	SPEC	SPECIFICATION
DN	DOWN	SS	STAINLESS STEEL
DWG	DRAWING	SST	SECONDARY STORM DRAIN
DWH	DOMESTIC WATER HEATER	ST	STORM DRAIN
DWRP-1	DOMESTIC WATER RECIRCULATING PUMP	STD	STANDARD
ELEV	ELEVATION OR ELEVATOR	SW	SOFTENED WATER
EOSC	EMERGENCY OXYGEN SUPPLY CONNECTION	TD	TRENCH DRAIN
EQUIP	EQUIPMENT	TEMP	TEMPERATURE
ER	EXISTING RELOCATED	TOF	TOP OF FOOTER
ETR	EXISTING TO REMAIN	TRANSF	TRANSFER
EWC	ELECTRIC WATER COOLER	TYP	TYPICAL
EWH	ELECTRIC WATER HEATER	UC	UNDERCOUNTER
EWT	ENTERING WATER TEMPERATURE	UH	UNIT HEATER
EX	EXISTING	UL	UNDERWRITERS LABORATORY
FBO	FURNISHED BY OTHERS	U.N.O.	UNLESS NOTED OTHERWISE
FC	FLEXIBLE CONNECTION	VERT	VERTICAL
FD	FLOOR DRAIN	VFD	VARIABLE FREQUENCY DRIVE
FDC	FIRE DEPARTMENT CONNECTION	VTR	VENT TO ROOF
FFE	FINISH FLOOR ELEVATION	W/	WITH
FLEX	FLEXIBLE	W/O	WITH OUT
FLR	FLOOR	WC	WATER CLOSET
FP	FIRE PROTECTION	WCO	WALL CLEANOUT
GC	GENERAL CONTRACTOR	WF	WATER FILTER
GPH	GALLONS PER HOUR	WH	WALL HYDRANT
GPM	GALLONS PER MINUTE	WHA	WATER HAMMER ARRESTOR
GWB	GYPSUM WALL BOARD	WP	WEATHER PROOF
GWH	GAS WATER HEATER	WTR	WATER
HB	HOSE BIBB	WWM	WELDED WIRE MESH
HORZ	HORIZONTAL	ZVB	ZONE VALVE BOX
HP	HORSEPOWER		

COMMONWEALTH OF VIRGINIA
PHILLIP L. GENTRY
Lic. No. 025757
01/03/2024
PROFESSIONAL ENGINEER

DRAWINGS AND DESIGNS ARE VALID WITH AUTHORIZED SEALS ONLY.
DRAWINGS AND DESIGNS AS AN INSTRUMENT OF SERVICE, ARE THE PROPERTY OF THE ARCHITECT AND ENGINEER, WITHOUT EXCEPTION, THE PROPERTY OF THE ARCHITECT AND ENGINEER AND MAY BE USED ONLY WITH THE PERMISSION OF THE ARCHITECT AND ENGINEER.
CONTRACTOR SHALL BE RESPONSIBLE FOR ALL DIMENSIONS AND CONDITIONS ON THE JOB AND REPORT ANY ERRORS, OMISSIONS OR CONFLICTS TO THE ARCHITECT AND ENGINEER BEFORE PROCEEDING WITH THE WORK.
VERIFY THAT THIS SET IS COMPLETE AND CONSISTS OF THE DRAWINGS LISTED IN THE TABLE OF CONTENTS. DO NOT SCALE DRAWINGS. USE ONLY DIMENSIONS SHOWN OR CALCULATED. ALL DIMENSIONS TO BE VERIFIED AT THE JOB SITE. REPORT ANY ERRORS, OMISSIONS OR CONFLICTS TO THE ARCHITECT AND ENGINEER BEFORE PROCEEDING WITH THE WORK.
IF THERE EXISTS AN ISSUE OR QUESTION OF PROPER PROVISIONS, THE ISSUE SHALL BE DISCUSSED WITH THE ARCHITECT AND ENGINEER PRIOR TO PROCEEDING WITH THE WORK. ALL DRAWINGS, SPECIFICATIONS, AND OTHER DOCUMENTS PROVIDED BY THE ARCHITECT AND ENGINEER ARE INTENDED TO COMPLY WITH APPLICABLE CODES AND REGULATIONS. THE ARCHITECT AND ENGINEER ASSUME NO RESPONSIBILITY FOR CONDITIONS THAT DEVIATE FROM THOSE REQUIRED BY CODES AND REGULATIONS.
VERIFY ALL ELECTRICAL AND MECHANICAL CONDITIONS WITH OWNER'S PROJECT MANAGER OF ANY VARIANCE BETWEEN FACTUAL AND DRAWING CONDITIONS.
PLEASE READ BEFORE OPENING ELECTRONIC FILES. NOTE THE FOLLOWING:
THE ELECTRONIC FILES ARE PROVIDED AS A CONVENIENCE TO THE CONTRACTOR, SUBCONTRACTOR, SUPPLIER, OR VENDOR ("RECIPIENT") AS PART OF THE PROJECT. THE RECIPIENT'S USE OF THE ELECTRONIC FILES IS SUBJECT TO THE FOLLOWING TERMS AND CONDITIONS:
1. THE RECIPIENT ACCEPTS THE ELECTRONIC FILES "AS IS" AS PROVIDED BY ARCHITECT AND ENGINEER. ARCHITECT AND ENGINEER MAKE NO REPRESENTATIONS AS TO THE COMPLETENESS OR ACCURACY OF THE ELECTRONIC FILES. ARCHITECT AND ENGINEER ARE NOT LIABLE FOR ANY LOSS OR DAMAGE ARISING FROM THE USE OF THE ELECTRONIC FILES, INCLUDING ANY DEFECTS IN THE ELECTRONIC FILES ARISING FROM ANY ACTIONS OF THE ARCHITECT AND ENGINEER IN PREPARING THE ELECTRONIC FILES, OR ANY DEFECTS IN THE ELECTRONIC FILES CAUSED BY THE ARCHITECT AND ENGINEER'S NEGLIGENCE.
2. THE RECIPIENT'S USE OF THE ELECTRONIC FILES IS SUBJECT TO THE ARCHITECT AND ENGINEER'S RIGHTS AS THE AUTHORS OF THE DESIGN REPRESENTED IN THE ELECTRONIC FILES. THE RECIPIENT AGREES NOT TO REMOVE OR ALTER THE ARCHITECT AND ENGINEER'S COPYRIGHT NOTICE, TRADEMARK, OR LEGEND FROM THE ELECTRONIC FILES.
3. THE RECIPIENT AGREES TO INDEMNIFY AND HOLD HARMLESS THE ARCHITECT AND ENGINEER FROM ANY CLAIMS, LIABILITIES, OR EXPENSES TO THE EXTENT ARISING FROM THE RECIPIENT'S USE OF THE ELECTRONIC FILES.
4. THE RECIPIENT'S RIGHT TO USE THE ELECTRONIC FILES TERMINATES UPON THE ARCHITECT AND ENGINEER'S DELIVERY TO THE RECIPIENT OF THE PROJECT DOCUMENTS.

No.	Date	Revision Notes	Zone	Appr

No.	Date	Issue Notes
2	01/3/2024	release for bid
1	12/7/2023	permit subm

Designed By:
Drawn By: Release
Checked By: Plot Date: 23/03/;culpeper
Reviewed By: Drawing Color:
Submitted By: CAD File Name:
Project Manager: Plot Date:

Design Firm
NORMAN SMITH ARCHITECTURE
1341 H Street, Washington, DC 20002-4906
3637 State Mills Road, Sperryville, VA 22740
T 202.462.5686 www.normansmitharchitecture.com

Consultant
VALLEY ENGINEERING
4991 Crowe Drive, Mount Crawford, VA 22841
T 540.434.6365 www.valleyesp.com

Project Title
Culpeper County
Community Pool Project
16388 Competition Drive
Culpeper, VA

Sheet Title
PLUMBING
ABBREVIATIONS AND
NOTES

Scale
NTS

Sheet No.
P000.2
of

(NOT ALL SPECIFICATIONS APPLY TO THIS PROJECT)
SECTION 220500 - COMMON WORK RESULTS FOR PLUMBING

PART 1 - GENERAL

1.1 SUMMARY
- A. ALL SECTIONS OF THIS SPECIFICATION ARE NOT REQUIRED FOR THIS PROJECT. COORDINATE SECTIONS AND NEED AS REQUIRED BY SYSTEMS AND LOCATION INSTALLED
- B. THIS SECTION INCLUDES THE FOLLOWING:
  1. PIPING MATERIALS AND INSTALLATION INSTRUCTIONS COMMON TO MOST PIPING SYSTEMS.
  2. DIELECTRIC FITTINGS.
  3. MECHANICAL SLEEVE SEALS.
  4. SLEEVES.
  5. ESCUTCHEONS.
  6. GROUT.
  7. EQUIPMENT INSTALLATION REQUIREMENTS COMMON TO EQUIPMENT SECTIONS.
  8. CONCRETE BASES.
  9. SUPPORTS AND ANCHORAGES.
  10.

1.2 DEFINITIONS
- A. FINISHED SPACES: SPACES OTHER THAN PLUMBING AND ELECTRICAL EQUIPMENT ROOMS, FURRED SPACES, PIPE CHASES, UNHEATED SPACES IMMEDIATELY BELOW ROOF, SPACES ABOVE CEILINGS, UNEXCAVATED SPACES, CRAWLSPACES, AND TUNNELS.
- B. EXPOSED, INTERIOR INSTALLATIONS: EXPOSED TO VIEW INDOORS. EXAMPLES INCLUDE FINISHED OCCUPIED SPACES AND PLUMBING EQUIPMENT ROOMS.
- C. EXPOSED, EXTERIOR INSTALLATIONS: EXPOSED TO VIEW OUTDOORS OR SUBJECT TO OUTDOOR AMBIENT TEMPERATURES AND WEATHER CONDITIONS. EXAMPLES INCLUDE ROOFTOP LOCATIONS.
- D. CONCEALED, INTERIOR INSTALLATIONS: CONCEALED FROM VIEW AND PROTECTED FROM PHYSICAL CONTACT BY BUILDING OCCUPANTS. EXAMPLES INCLUDE ABOVE CEILINGS AND IN CHASES.
- E. CONCEALED, EXTERIOR INSTALLATIONS: CONCEALED FROM VIEW AND PROTECTED FROM WEATHER CONDITIONS AND PHYSICAL CONTACT BY BUILDING OCCUPANTS BUT SUBJECT TO OUTDOOR AMBIENT TEMPERATURES. EXAMPLES INCLUDE INSTALLATIONS WITHIN UNHEATED SHELTERS.

1.3 QUALITY ASSURANCE
- A. STEEL SUPPORT WELDING: QUALIFY PROCESSES AND OPERATORS ACCORDING TO AWS D1.1, "STRUCTURAL WELDING CODE--STEEL."
- B. ELECTRICAL CHARACTERISTICS FOR PLUMBING EQUIPMENT: EQUIPMENT OF HIGHER ELECTRICAL CHARACTERISTICS MAY BE FURNISHED PROVIDED SUCH PROPOSED EQUIPMENT IS APPROVED IN WRITING AND CONNECTING ELECTRICAL SERVICES, CIRCUIT BREAKERS, AND CONDUIT SIZES ARE APPROPRIATELY MODIFIED. IF MINIMUM ENERGY RATINGS OR EFFICIENCIES ARE SPECIFIED, EQUIPMENT SHALL COMPLY WITH REQUIREMENTS.

PART 2 - PRODUCT

2.1 PIPE, TUBE, AND FITTINGS
- A. PIPE THREADS: ASME B1.20.1 FOR FACTORY-THREADED PIPE AND PIPE FITTINGS.

2.2 JOINING MATERIALS
- A. REFER TO INDIVIDUAL PIPING SECTIONS FOR SPECIAL JOINING MATERIALS NOT LISTED BELOW.
- B. PIPE-FLANGE GASKET MATERIALS: ASME B16.21, NONMETALLIC, FLAT, ASBESTOS-FREE, 1/8-INCH MAXIMUM THICKNESS UNLESS THICKNESS OR SPECIFIC MATERIAL IS INDICATED.
- C. PLASTIC, PIPE-FLANGE GASKET, BOLTS, AND NUTS: TYPE AND MATERIAL RECOMMENDED BY PIPING SYSTEM MANUFACTURER, UNLESS OTHERWISE INDICATED.
- D. SOLDER FILLER METALS: ASTM B 32, LEAD-FREE ALLOYS. INCLUDE WATER-FLUSHABLE FLUX ACCORDING TO ASTM B 813.
- E. BRAZING FILLER METALS: AWS A5.8, BCUP SERIES OR BAG1, UNLESS OTHERWISE INDICATED.
- F. WELDING FILLER METALS: COMPLY WITH AWS D10.12.
  1. SOLVENT CEMENTS FOR JOINING PLASTIC PIPING:
     2. ABS PIPING: ASTM D 2235.
     3. CPVC PIPING: ASTM F 493.
     4. PVC PIPING: ASTM D 2564. INCLUDE PRIMER ACCORDING TO ASTM F 656.
     5. PVC TO ABS PIPING TRANSITION: ASTM D 3138.

2.3 DIELECTRIC FITTINGS
- A. DESCRIPTION: COMBINATION FITTING OF COPPER ALLOY AND FERROUS MATERIALS WITH THREADED, SOLDER-JOINT, PLAIN, OR WELD-NECK END CONNECTIONS THAT MATCH PIPING SYSTEM MATERIALS.
- B. INSULATING MATERIAL: SUITABLE FOR SYSTEM FLUID, PRESSURE, AND TEMPERATURE.
- C. DIELECTRIC UNIONS: FACTORY-FABRICATED, UNION ASSEMBLY, FOR 250-PSIG MINIMUM WORKING PRESSURE AT 180 DEG F.
- D. DIELECTRIC FLANGES: FACTORY-FABRICATED, COMPANION-FLANGE ASSEMBLY, FOR 150- OR 300-PSIG MINIMUM WORKING PRESSURE AS REQUIRED TO SUIT SYSTEM PRESSURES.
- E. DIELECTRIC COUPLINGS: GALVANIZED-STEEL COUPLING WITH INERT AND NONCORROSIVE, THERMOPLASTIC LINING; THREADED ENDS; AND 300-PSIG MINIMUM WORKING PRESSURE AT 225°F.
- F. DIELECTRIC NIPPLES: ELECTROPLATED STEEL NIPPLE WITH INERT AND NONCORROSIVE, THERMOPLASTIC LINING; PLAIN, THREADED, OR GROOVED ENDS; AND 300-PSIG MINIMUM WORKING PRESSURE AT 225°F.

2.4 MECHANICAL SLEEVE SEALS
- A. DESCRIPTION: MODULAR SEALING ELEMENT UNIT, DESIGNED FOR FIELD ASSEMBLY, TO FILL ANNULAR SPACE BETWEEN PIPE AND SLEEVE.
- B. SEALING ELEMENTS: EPDM INTERLOCKING LINKS SHAPED TO FIT SURFACE OF PIPE. INCLUDE TYPE AND NUMBER REQUIRED FOR PIPE MATERIAL AND SIZE OF PIPE.
- C. PRESSURE PLATES: STAINLESS STEEL. INCLUDE TWO FOR EACH SEALING ELEMENT.
- D. CONNECTING BOLTS AND NUTS: STAINLESS STEEL OF LENGTH REQUIRED TO SECURE PRESSURE PLATES TO SEALING ELEMENTS. INCLUDE ONE FOR EACH SEALING ELEMENT.

2.5 SLEEVES
- A. GALVANIZED-STEEL SHEET: 0.0239-INCH MINIMUM THICKNESS; ROUND TUBE CLOSED WITH WELDED LONGITUDINAL JOINT.
- B. STEEL PIPE: ASTM A 53, TYPE E, GRADE B, SCHEDULE 40, GALVANIZED, PLAIN ENDS.
- C. CAST IRON: CAST OR FABRICATED "WALL PIPE" EQUIVALENT TO DUCTILE-IRON PRESSURE PIPE, WITH PLAIN ENDS AND INTEGRAL WATERSTOP, UNLESS OTHERWISE INDICATED.
- D. STACK SLEEVE FITTINGS: MANUFACTURED, CAST-IRON SLEEVE WITH INTEGRAL CLAMPING FLANGE. INCLUDE CLAMPING RING AND BOLTS AND NUTS FOR MEMBRANE FLASHING.
  1. UNDERDECK CLAMP: CLAMPING RING WITH SET SCREWS.
- E. MOLDED PVC: PERMANENT, WITH NAILING FLANGE FOR ATTACHING TO WOODEN FORMS.
- F. PVC PIPE: ASTM D 1785, SCHEDULE 40.
- G. MOLDED PE: REUSABLE, PE, TAPERED-CUP SHAPED, AND SMOOTH-OUTER SURFACE WITH NAILING FLANGE FOR ATTACHING TO WOODEN FORMS.

2.6 ESCUTCHEONS
- A. DESCRIPTION: MANUFACTURED WALL AND CEILING ESCUTCHEONS AND FLOOR PLATES, WITH AN ID TO CLOSELY FIT AROUND PIPE, TUBE, AND INSULATION OF INSULATED PIPING AND AN OD THAT COMPLETELY COVERS OPENING.
- B. ONE-PIECE, DEEP-PATTERN TYPE: DEEP-DRAWN, BOX-SHAPED BRASS WITH POLISHED CHROME-PLATED FINISH.
- C. ONE-PIECE, CAST-BRASS TYPE: WITH SET SCREW.
  1. FINISH: POLISHED CHROME-PLATED.
- D. SPLIT-CASTING, CAST-BRASS TYPE: WITH CONCEALED HINGE AND SET SCREW.
  1. FINISH: POLISHED CHROME-PLATED.

2.7 GROUT
- A. DESCRIPTION: ASTM C 1107, GRADE B, NONSHRINK AND NONMETALLIC, DRY HYDRAULIC-CEMENT GROUT.
  1. CHARACTERISTICS: POST-HARDENING, VOLUME-ADJUSTING, NONSTAINING, NONCORROSIVE, NONGASEOUS, AND RECOMMENDED FOR INTERIOR AND EXTERIOR APPLICATIONS.
  2. DESIGN MIX: 5000-PSI, 28-DAY COMPRESSIVE STRENGTH.
  3. PACKAGING: PREMIXED AND FACTORY PACKAGED.

PART 3 - EXECUTION

3.2 PIPING SYSTEMS - COMMON REQUIREMENTS
- A. INSTALL PIPING ACCORDING TO THE REQUIREMENTS STATED HEREIN AND ANY APPLICABLE RECOGNIZED STANDARDS.
- B. DRAWING PLANS, SCHEMATICS, AND DIAGRAMS INDICATE GENERAL LOCATION AND ARRANGEMENT OF PIPING SYSTEMS. INDICATED LOCATIONS AND ARRANGEMENTS WERE USED TO SIZE PIPE AND CALCULATE FRICTION LOSS, EXPANSION, PUMP SIZING, AND OTHER DESIGN CONSIDERATIONS. INSTALL PIPING AS INDICATED UNLESS DEVIATIONS TO LAYOUT ARE APPROVED ON COORDINATION DRAWINGS.
- C. INSTALL PIPING IN CONCEALED LOCATIONS, UNLESS OTHERWISE INDICATED AND EXCEPT IN EQUIPMENT ROOMS AND SERVICE AREAS.
- D. INSTALL PIPING INDICATED TO BE EXPOSED AND PIPING IN EQUIPMENT ROOMS AND SERVICE AREAS AT RIGHT ANGLES OR PARALLEL TO BUILDING WALLS. DIAGONAL RUNS ARE PROHIBITED UNLESS SPECIFICALLY INDICATED OTHERWISE.
- E. INSTALL PIPING ABOVE ACCESSIBLE CEILINGS TO ALLOW SUFFICIENT SPACE FOR CEILING PANEL REMOVAL.
- F. INSTALL PIPING TO PERMIT VALVE SERVICING.
- G. INSTALL PIPING AT INDICATED SLOPES.
- H. INSTALL PIPING FREE OF SAGS AND BENDS.
- I. INSTALL FITTINGS FOR CHANGES IN DIRECTION AND BRANCH CONNECTIONS.
- J. INSTALL PIPING TO ALLOW APPLICATION OF INSULATION.
- K. SELECT SYSTEM COMPONENTS WITH PRESSURE RATING EQUAL TO OR GREATER THAN SYSTEM OPERATING PRESSURE.
- L. INSTALL ESCUTCHEONS FOR PENETRATIONS OF WALLS, CEILINGS, AND FLOORS.
- M. INSTALL SLEEVES FOR PIPES PASSING THROUGH CONCRETE AND MASONRY WALLS, GYPSUM-BOARD PARTITIONS, AND CONCRETE FLOOR AND ROOF SLABS.
- N. ABOVEGROUND, EXTERIOR-WALL PIPE PENETRATIONS: SEAL PENETRATIONS USING SLEEVES AND MECHANICAL SLEEVE SEALS. SELECT SLEEVE SIZE TO ALLOW FOR 1-INCH ANNULAR CLEAR SPACE BETWEEN PIPE AND SLEEVE FOR INSTALLING MECHANICAL SLEEVE SEALS.
  1. INSTALL STEEL PIPE FOR SLEEVES SMALLER THAN 6 INCHES IN DIAMETER.
  2. INSTALL CAST-IRON "WALL PIPES" FOR SLEEVES 6 INCHES AND LARGER IN DIAMETER.
  3. MECHANICAL SLEEVE SEAL INSTALLATION: SELECT TYPE AND NUMBER OF SEALING ELEMENTS REQUIRED FOR PIPE MATERIAL AND SIZE. POSITION PIPE IN CENTER OF SLEEVE. ASSEMBLE MECHANICAL SLEEVE SEALS AND INSTALL IN ANNULAR SPACE BETWEEN PIPE AND TIGHTEN BOLTS AGAINST PRESSURE PLATES THAT CAUSE SEALING ELEMENTS TO EXPAND AND MAKE WATERTIGHT SEAL.
- O. UNDERGROUND, EXTERIOR-WALL PIPE PENETRATIONS: INSTALL CAST-IRON "WALL PIPES" FOR SLEEVES. SEAL PIPE PENETRATIONS USING MECHANICAL SLEEVE SEALS. SELECT SLEEVE SIZE TO ALLOW FOR 1-INCH ANNULAR CLEAR SPACE BETWEEN PIPE AND SLEEVE FOR INSTALLING MECHANICAL SLEEVE SEALS.
  1. MECHANICAL SLEEVE SEAL INSTALLATION: SELECT TYPE AND NUMBER OF SEALING ELEMENTS REQUIRED FOR PIPE MATERIAL AND SIZE. POSITION PIPE IN CENTER OF SLEEVE. ASSEMBLE MECHANICAL SLEEVE SEALS AND INSTALL IN ANNULAR SPACE BETWEEN PIPE AND TIGHTEN BOLTS AGAINST PRESSURE PLATES THAT CAUSE SEALING ELEMENTS TO EXPAND AND MAKE WATERTIGHT SEAL.
- P. FIRE-BARRIER PENETRATIONS: MAINTAIN INDICATED FIRE RATING OF WALLS, PARTITIONS, CEILINGS, AND FLOORS AT PIPE PENETRATIONS. SEAL PIPE PENETRATIONS WITH FIRESTOP MATERIALS. REFER TO DIVISION 07 SECTION "PENETRATION FIRESTOPPING" FOR MATERIALS.
- Q. VERIFY FINAL EQUIPMENT LOCATIONS FOR ROUGHING-IN.
- R. REFER TO EQUIPMENT SPECIFICATIONS IN OTHER SECTIONS OF THESE SPECIFICATIONS FOR ROUGHING-IN REQUIREMENTS.

3.3 PIPING JOINT CONSTRUCTION
- A. JOIN PIPE AND FITTINGS ACCORDING TO THE FOLLOWING REQUIREMENTS AND DIVISION 22 SECTIONS SPECIFYING PIPING SYSTEMS.
- B. REAM ENDS OF PIPES AND TUBES AND REMOVE BURRS. BEVEL PLAIN ENDS OF STEEL PIPE.
- C. REMOVE SCALE, SLAG, DIRT, AND DEBRIS FROM INSIDE AND OUTSIDE OF PIPE AND FITTINGS BEFORE ASSEMBLY.
- D. SOLDERED JOINTS: APPLY ASTM B 813, WATER-FLUSHABLE FLUX, UNLESS OTHERWISE INDICATED, TO TUBE END. CONSTRUCT JOINTS ACCORDING TO ASTM B 828 OR CDA'S "COPPER TUBE HANDBOOK," USING LEAD-FREE SOLDER ALLOY COMPLYING WITH ASTM B 32.
- E. BRAZED JOINTS: CONSTRUCT JOINTS ACCORDING TO AWS'S "BRAZING HANDBOOK," "PIPE AND TUBE" CHAPTER, USING COPPER-PHOSPHORUS BRAZING FILLER METAL COMPLYING WITH AWS A5.8.
- F. THREADED JOINTS: THREAD PIPE WITH TAPERED PIPE THREADS ACCORDING TO ASME B1.20.1. CUT THREADS FULL AND CLEAN USING SHARP REAM THREADED PIPE ENDS TO REMOVE BURRS AND RESTORE FULL ID. JOIN PIPE FITTINGS AND VALVES AS FOLLOWS:
  1. APPLY APPROPRIATE TAPE OR THREAD COMPOUND TO EXTERNAL PIPE THREADS UNLESS DRY SEAL THREADING IS SPECIFIED.
  2. DAMAGED THREADS: DO NOT USE PIPE OR PIPE FITTINGS WITH THREADS THAT ARE CORRODED OR DAMAGED. DO NOT USE PIPE SECTIONS THAT HAVE CRACKED OR OPEN WELDS.
- G. WELDED JOINTS: CONSTRUCT JOINTS ACCORDING TO AWS D10.12, USING QUALIFIED PROCESSES AND WELDING OPERATORS ACCORDING TO PART 1 "QUALITY ASSURANCE" ARTICLE.
- H. FLANGED JOINTS: SELECT APPROPRIATE GASKET MATERIAL, SIZE, TYPE, AND THICKNESS FOR SERVICE APPLICATION. INSTALL GASKET CONCENTRICALLY POSITIONED. USE SUITABLE LUBRICANTS ON BOLT THREADS.
- I. PLASTIC PIPING SOLVENT-CEMENT JOINTS: CLEAN AND DRY JOINING SURFACES. JOIN PIPE AND FITTINGS ACCORDING TO THE FOLLOWING:
  1. COMPLY WITH ASTM F 402, FOR SAFE-HANDLING PRACTICE OF CLEANERS, PRIMERS, AND SOLVENT CEMENTS.
  2. ABS PIPING: JOIN ACCORDING TO ASTM D 2235 AND ASTM D 2661 APPENDIXES.
  3. CPVC PIPING: JOIN ACCORDING TO ASTM D 2846/D 2846M APPENDIX.
  4. PVC PRESSURE PIPING: JOIN SCHEDULE NUMBER ASTM D 1785, PVC PIPE AND PVC SOCKET FITTINGS ACCORDING TO ASTM D 2672. JOIN OTHER-THAN-SCHEDULE-NUMBER PVC PIPE AND SOCKET FITTINGS ACCORDING TO ASTM D 2855.
  5. PVC NONPRESSURE PIPING: JOIN ACCORDING TO ASTM D 2855.
  6. PVC TO ABS NONPRESSURE TRANSITION FITTINGS: JOIN ACCORDING TO ASTM D 3138 APPENDIX.
- J. PLASTIC PRESSURE PIPING GASKETED JOINTS: JOIN ACCORDING TO ASTM D 3139.
- K. PLASTIC NONPRESSURE PIPING GASKETED JOINTS: JOIN ACCORDING TO ASTM D 3212.

3.4 PIPING CONNECTIONS
- A. MAKE CONNECTIONS ACCORDING TO THE FOLLOWING, UNLESS OTHERWISE INDICATED:
  1. INSTALL UNIONS, IN PIPING NPS 2 AND SMALLER, ADJACENT TO EACH VALVE AND AT FINAL CONNECTION TO EACH PIECE OF EQUIPMENT.
  2. INSTALL FLANGES, IN PIPING NPS 2-1/2 AND LARGER, ADJACENT TO FLANGED VALVES AND AT FINAL CONNECTION TO EACH PIECE OF EQUIPMENT.
  3. DRY PIPING SYSTEMS: INSTALL DIELECTRIC UNIONS AND FLANGES TO CONNECT PIPING MATERIALS OF DISSIMILAR METALS.
  4. WET PIPING SYSTEMS: INSTALL DIELECTRIC COUPLING AND NIPPLE FITTINGS TO CONNECT PIPING MATERIALS OF DISSIMILAR METALS.

3.5 EQUIPMENT INSTALLATION - COMMON REQUIREMENTS
- A. INSTALL EQUIPMENT TO ALLOW MAXIMUM POSSIBLE HEADROOM UNLESS SPECIFIC MOUNTING HEIGHTS ARE NOT INDICATED.
- B. INSTALL EQUIPMENT LEVEL AND PLUMB, PARALLEL AND PERPENDICULAR TO OTHER BUILDING SYSTEMS AND COMPONENTS IN EXPOSED INTERIOR SPACES, UNLESS OTHERWISE INDICATED.
- C. INSTALL PLUMBING EQUIPMENT TO FACILITATE SERVICE, MAINTENANCE, AND REPAIR OR REPLACEMENT OF COMPONENTS. CONNECT EQUIPMENT FOR EASE OF DISCONNECTING, WITH MINIMUM INTERFERENCE TO OTHER INSTALLATIONS. EXTEND GREASE FITTINGS TO ACCESSIBLE LOCATIONS.
- D. INSTALL EQUIPMENT TO ALLOW RIGHT OF WAY FOR PIPING INSTALLED AT REQUIRED SLOPE.

3.6 CONCRETE BASES
- A. CONCRETE BASES: ANCHOR EQUIPMENT TO CONCRETE BASE ACCORDING TO EQUIPMENT MANUFACTURER'S WRITTEN INSTRUCTIONS AND ACCORDING TO SEISMIC CODES AT PROJECT.
  1. CONSTRUCT CONCRETE BASES OF DIMENSIONS INDICATED, BUT NOT LESS THAN 4 INCHES LARGER IN BOTH DIRECTIONS THAN SUPPORTED UNIT.
  2. INSTALL DOWEL RODS TO CONNECT CONCRETE BASE TO CONCRETE FLOOR. UNLESS OTHERWISE INDICATED, INSTALL DOWEL RODS ON 18-INCH CENTERS AROUND THE FULL PERIMETER OF THE BASE.
  3. INSTALL EPOXY-COATED ANCHOR BOLTS FOR SUPPORTED EQUIPMENT THAT EXTEND THROUGH CONCRETE BASE, AND ANCHOR INTO STRUCTURAL CONCRETE FLOOR.
  4. PLACE AND SECURE ANCHORAGE DEVICES. USE SUPPORTED EQUIPMENT MANUFACTURER'S SETTING DRAWINGS, TEMPLATES, DIAGRAMS, INSTRUCTIONS, AND DIRECTIONS FURNISHED WITH ITEMS TO BE EMBEDDED.
  5. INSTALL ANCHOR BOLTS TO ELEVATIONS REQUIRED FOR PROPER ATTACHMENT TO SUPPORTED EQUIPMENT.
  6. INSTALL ANCHOR BOLTS ACCORDING TO ANCHOR-BOLT MANUFACTURER'S WRITTEN INSTRUCTIONS.
  7. USE 3000-PSI, 28-DAY COMPRESSIVE-STRENGTH CONCRETE AND REINFORCEMENT.

3.7 ERECTION OF METAL SUPPORTS AND ANCHORAGES
- A. CUT, FIT, AND PLACE MISCELLANEOUS METAL SUPPORTS ACCURATELY IN LOCATION, ALIGNMENT, AND ELEVATION TO SUPPORT AND ANCHOR PLUMBING MATERIALS AND EQUIPMENT.
- B. FIELD WELDING: COMPLY WITH AWS D1.1.

3.8 ERECTION OF WOOD SUPPORTS AND ANCHORAGES
- A. CUT, FIT, AND PLACE WOOD GROUNDS, NAILERS, BLOCKING, AND ANCHORAGES TO SUPPORT, AND ANCHOR PLUMBING MATERIALS AND EQUIPMENT.
- B. SELECT FASTENER SIZES THAT WILL NOT PENETRATE MEMBERS IF OPPOSITE SIDE WILL BE EXPOSED TO VIEW OR WILL RECEIVE FINISH MATERIALS. TIGHTEN CONNECTIONS BETWEEN MEMBERS. INSTALL FASTENERS WITHOUT SPLITTING WOOD MEMBERS.
- C. ATTACH TO SUBSTRATES AS REQUIRED TO SUPPORT APPLIED LOADS.

3.9 GROUTING
- A. MIX AND INSTALL GROUT FOR PLUMBING EQUIPMENT BASE BEARING SURFACES, PUMP AND OTHER EQUIPMENT BASE PLATES, AND ANCHORS.
- B. CLEAN SURFACES THAT WILL COME INTO CONTACT WITH GROUT.
- C. PROVIDE FORMS AS REQUIRED FOR PLACEMENT OF GROUT.
- D. AVOID AIR ENTRAPMENT DURING PLACEMENT OF GROUT.
- E. PLACE GROUT, COMPLETELY FILLING EQUIPMENT BASES.
- F. PLACE GROUT ON CONCRETE BASES AND PROVIDE SMOOTH BEARING SURFACE FOR EQUIPMENT.
- G. PLACE GROUT AROUND ANCHORS.
- H. CURE PLACED GROUT.

SECTION 220529 - HANGERS AND SUPPORTS FOR PLUMBING PIPING AND EQUIPMENT

PART 1 - GENERAL

1.1 SUMMARY
- A. ALL SECTIONS OF THIS SPECIFICATION ARE NOT REQUIRED FOR THIS PROJECT. COORDINATE SECTIONS AND NEED AS REQUIRED BY SYSTEMS AND LOCATION INSTALLED.
- B. THIS SECTION INCLUDES THE FOLLOWING:
  1. STEEL PIPE HANGERS AND SUPPORTS.
  2. TRAPEZE PIPE HANGERS.
  3. METAL FRAMING SYSTEMS.
  4. THERMAL-HANGER SHIELD INSERTS.
  5. FASTENER SYSTEMS.
  6. EQUIPMENT SUPPORTS.

1.2 DEFINITIONS
- A. TERMINOLOGY: AS DEFINED IN MSS SP-90, "GUIDELINES ON TERMINOLOGY FOR PIPE HANGERS AND SUPPORTS."

1.3 PERFORMANCE REQUIREMENTS
- A. DESIGN SUPPORTS FOR MULTIPLE PIPES CAPABLE OF SUPPORTING COMBINED WEIGHT OF SUPPORTED SYSTEMS, SYSTEM CONTENTS, AND TEST WATER.
- B. DESIGN EQUIPMENT SUPPORTS CAPABLE OF SUPPORTING COMBINED OPERATING WEIGHT OF SUPPORTED EQUIPMENT AND CONNECTED SYSTEMS AND COMPONENTS.

PART 2 - PRODUCTS

2.1 MANUFACTURERS
- A. IN OTHER PART 2 ARTICLES WHERE TITLES BELOW INTRODUCE LISTS, THE FOLLOWING REQUIREMENTS APPLY TO PRODUCT SELECTION:
  1. MANUFACTURERS: SUBJECT TO COMPLIANCE WITH REQUIREMENTS, PROVIDE PRODUCTS BY ONE OF THE MANUFACTURERS SPECIFIED.

2.2 STEEL PIPE HANGERS AND SUPPORTS
- A. DESCRIPTION: MSS SP-58, TYPES 1 THROUGH 58, FACTORY-FABRICATED COMPONENTS. REFER TO PART 3 "HANGER AND SUPPORT APPLICATIONS" ARTICLE FOR WHERE TO USE SPECIFIC HANGER AND SUPPORT TYPES.

2.3 TRAPEZE PIPE HANGERS
- A. DESCRIPTION: MSS SP-69, TYPE 59, SHOP- OR FIELD-FABRICATED PIPE-SUPPORT ASSEMBLY MADE FROM STRUCTURAL-STEEL SHAPES WITH MSS SP-58 HANGER RODS, NUTS, SADDLES, AND U-BOLTS.

2.4 METAL FRAMING SYSTEMS
- A. DESCRIPTION: MFMA-3, SHOP- OR FIELD-FABRICATED PIPE-SUPPORT ASSEMBLY MADE OF STEEL CHANNELS AND OTHER COMPONENTS.
- B. MANUFACTURERS:
  1. B-LINE SYSTEMS, INC.; A DIVISION OF COOPER INDUSTRIES.
  2. ERICO/MICHIGAN HANGER CO.; ERISTRUT DIV.
  3. GS METALS CORP.
  4. POWER-STRUT DIV.; TYCO INTERNATIONAL, LTD.
  5. THOMAS & BETTS CORPORATION.
  6. UNISTRUT CORP.; TYCO INTERNATIONAL, LTD.
- C. COATINGS: MANUFACTURER'S STANDARD FINISH, UNLESS BARE METAL SURFACES ARE INDICATED.
- D. NONMETALLIC COATINGS: PLASTIC COATING, JACKET, OR LINER.

2.5 THERMAL-HANGER SHIELD INSERTS
- A. DESCRIPTION: 100-PSIG- MINIMUM, COMPRESSIVE-STRENGTH INSULATION INSERT ENCASED IN SHEET METAL SHIELD.
- B. MANUFACTURERS:
  1. CARPENTER & PATERSON, INC.
  2. ERICO/MICHIGAN HANGER CO.
  3. PHS INDUSTRIES, INC.
  4. PIPE SHIELDS, INC.
  5. RILCO MANUFACTURING COMPANY, INC.
  6. VALUE ENGINEERED PRODUCTS, INC.
- C. INSULATION-INSERT MATERIAL FOR COLD PIPING: WATER-REPELLENT TREATED, ASTM C 533, TYPE I CALCIUM SILICATE WITH VAPOR BARRIER.
- D. INSULATION-INSERT MATERIAL FOR HOT PIPING: WATER-REPELLENT TREATED, ASTM C 533, TYPE I CALCIUM SILICATE.
- E. FOR TRAPEZE OR CLAMPED SYSTEMS: INSERT AND SHIELD SHALL COVER ENTIRE CIRCUMFERENCE OF PIPE.
- F. FOR CLEVIS OR BAND HANGERS: INSERT AND SHIELD SHALL COVER LOWER 180 DEGREES OF PIPE.
- G. INSERT LENGTH: EXTEND 2 INCHES BEYOND SHEET METAL SHIELD FOR PIPING OPERATING BELOW AMBIENT AIR TEMPERATURE.

2.6 FASTENER SYSTEMS
- A. POWDER-ACTUATED FASTENERS: THREADED-STEEL STUD, FOR USE IN HARDENED PORTLAND CEMENT CONCRETE WITH PULL-OUT, TENSION, AND HEAR CAPACITIES APPROPRIATE FOR SUPPORTED LOADS AND BUILDING MATERIALS WHERE USED.
  1. MANUFACTURERS:
     a. HILTI, INC.
     b. ITW RAMSET/RED HEAD.
     c. MASTERSET FASTENING SYSTEMS, INC.
     d. MKT FASTENING, LLC.
     e. POWERS FASTENERS.
- B. MECHANICAL-EXPANSION ANCHORS: INSERT-WEDGE-TYPE ZINC-COATED STEEL, FOR USE IN HARDENED PORTLAND CEMENT CONCRETE WITH PULL-OUT, TENSION, AND SHEAR CAPACITIES APPROPRIATE FOR SUPPORTED LOADS AND BUILDING MATERIALS WHERE USED.
  1. MANUFACTURERS:
     a. B-LINE SYSTEMS, INC.; A DIVISION OF COOPER INDUSTRIES.
     b. EMPIRE INDUSTRIES, INC.
     c. HILTI, INC.
     d. ITW RAMSET/RED HEAD.
     e. MKT FASTENING, LLC.
     f. POWERS FASTENERS.

2.7 EQUIPMENT SUPPORTS
DESCRIPTION: WELDED, SHOP- OR FIELD-FABRICATED EQUIPMENT SUPPORT MADE FROM STRUCTURAL-STEEL SHAPES.

2.8 MISCELLANEOUS MATERIALS
- A. STRUCTURAL STEEL: ASTM A 36/A 36M, STEEL PLATES, SHAPES, AND BARS; BLACK AND GALVANIZED.
- B. GROUT: ASTM C 1107, FACTORY-MIXED AND -PACKAGED, DRY, HYDRAULIC-CEMENT, NONSHRINK AND NONMETALLIC GROUT; SUITABLE FOR INTERIOR AND EXTERIOR APPLICATIONS.
  1. PROPERTIES: NONSTAINING, NONCORROSIVE, AND NONGASEOUS.
  2. DESIGN MIX: 5000-PSI, 28-DAY COMPRESSIVE STRENGTH.

PART 3 - EXECUTION

3.1 HANGER AND SUPPORT APPLICATIONS
- A. SPECIFIC HANGER AND SUPPORT REQUIREMENTS ARE SPECIFIED IN SECTIONS SPECIFYING PIPING SYSTEMS AND EQUIPMENT.
- B. COMPLY WITH MSS SP-69 FOR PIPE HANGER SELECTIONS AND APPLICATIONS THAT ARE NOT SPECIFIED IN PIPING SYSTEM SECTIONS.
- C. USE HANGERS AND SUPPORTS WITH GALVANIZED, METALLIC COATINGS FOR PIPING AND EQUIPMENT THAT WILL NOT HAVE FIELD-APPLIED FINISH.
- D. USE NONMETALLIC COATINGS ON ATTACHMENTS FOR ELECTROLYTIC PROTECTION WHERE ATTACHMENTS ARE IN DIRECT CONTACT WITH COPPER TUBING.
- E. USE PADDED HANGERS FOR PIPING THAT IS SUBJECT TO SCRATCHING.
- F. HORIZONTAL-PIPING HANGERS AND SUPPORTS: UNLESS OTHERWISE INDICATED AND EXCEPT AS SPECIFIED IN PIPING SYSTEM SECTIONS, INSTALL THE FOLLOWING TYPES:
  1. ADJUSTABLE, STEEL CLEVIS HANGERS (MSS TYPE 1): FOR SUSPENSION OF NONINSULATED OR INSULATED STATIONARY PIPES, NPS 1/2 TO NPS 30.
- G. VERTICAL-PIPING CLAMPS: UNLESS OTHERWISE INDICATED AND EXCEPT AS SPECIFIED IN PIPING SYSTEM SECTIONS, INSTALL THE FOLLOWING TYPES:
  1. EXTENSION PIPE OR RISER CLAMPS (MSS TYPE 8): FOR SUPPORT OF PIPE RISERS, NPS 3/4 TO NPS 20
  2. CARBON- OR ALLOY-STEEL RISER CLAMPS (MSS TYPE 42): FOR SUPPORT OF PIPE RISERS, NPS 3/4 TO NPS 20, IF LONGER ENDS ARE REQUIRED FOR RISER CLAMPS.
- H. HANGER-ROD ATTACHMENTS: UNLESS OTHERWISE INDICATED AND EXCEPT AS SPECIFIED IN PIPING SYSTEM SECTIONS, INSTALL THE FOLLOWING TYPES:
  1. STEEL TURNBUCKLES (MSS TYPE 13): FOR ADJUSTMENT UP TO 6 INCHES FOR HEAVY LOADS.
  2. STEEL CLEVISES (MSS TYPE 14): FOR 120 TO 450 DEG F PIPING INSTALLATIONS.
- I. BUILDING ATTACHMENTS: UNLESS OTHERWISE INDICATED AND EXCEPT AS SPECIFIED IN PIPING SYSTEM SECTIONS, INSTALL THE FOLLOWING TYPES:
  1. STEEL OR MALLEABLE CONCRETE INSERTS (MSS TYPE 18): FOR UPPER ATTACHMENT TO SUSPEND PIPE HANGERS FROM CONCRETE CEILING.
  2. TOP-BEAM C-CLAMPS (MSS TYPE 19): FOR USE UNDER ROOF INSTALLATIONS WITH BAR-JOIST CONSTRUCTION TO ATTACH TO TOP FLANGE OF STRUCTURAL SHAPE.
  3. SIDE-BEAM OR CHANNEL CLAMPS (MSS TYPE 20): FOR ATTACHING TO BOTTOM FLANGE OF BEAMS, CHANNELS, OR ANGLES.
  4. CENTER-BEAM CLAMPS (MSS TYPE 21): FOR ATTACHING TO CENTER OF BOTTOM FLANGE OF BEAMS.
  5. WELDED BEAM ATTACHMENTS (MSS TYPE 22): FOR ATTACHING TO BOTTOM OF BEAMS IF LOADS ARE CONSIDERABLE AND ROD SIZES ARE LARGE.
  6. C-CLAMPS (MSS TYPE 23): FOR STRUCTURAL SHAPES.
  7. WELDED-STEEL BRACKETS: FOR SUPPORT OF PIPES FROM BELOW, OR FOR SUSPENDING FROM ABOVE BY USING CLIP AND ROD. USE ONE OF THE FOLLOWING FOR INDICATED LOADS:
     a. LIGHT (MSS TYPE 31): 750 LB.
     b. MEDIUM (MSS TYPE 32): 1500 LB.
     c. HEAVY (MSS TYPE 33): 3000 LB.
     d. SIDE-BEAM BRACKETS (MSS TYPE 34): FOR SIDES OF STEEL OR WOODEN BEAMS.
     e. PLATE LUGS (MSS TYPE 57): FOR ATTACHING TO STEEL BEAMS IF FLEXIBILITY AT BEAM IS REQUIRED.
- J. SADDLES AND SHIELDS: UNLESS OTHERWISE INDICATED AND EXCEPT AS SPECIFIED IN PIPING SYSTEM SECTIONS, INSTALL THE FOLLOWING TYPES:
  1. STEEL PIPE-COVERING PROTECTION SADDLES (MSS TYPE 39): TO FILL INTERIOR VOIDS WITH INSULATION THAT MATCHES ADJOINING INSULATION.
  2. PROTECTION SHIELDS (MSS TYPE 40): OF LENGTH RECOMMENDED IN WRITING BY MANUFACTURER TO PREVENT CRUSHING INSULATION.
  3. THERMAL-HANGER SHIELD INSERTS: FOR SUPPORTING INSULATED PIPE.
- K. COMPLY WITH MSS SP-69 FOR TRAPEZE PIPE HANGER SELECTI

H. INSTALL HANGERS AND SUPPORTS TO ALLOW CONTROLLED THERMAL AND SEISMIC MOVEMENT OF PIPING SYSTEMS, TO PERMIT FREEDOM OF MOVEMENT BETWEEN PIPE ANCHORS, AND TO FACILITATE ACTION OF EXPANSION JOINTS, EXPANSION LOOPS, EXPANSION BENDS, AND SIMILAR UNITS.
I. INSTALL LATERAL BRACING WITH PIPE HANGERS AND SUPPORTS TO PREVENT SWAYING.
J. INSTALL BUILDING ATTACHMENTS WITHIN CONCRETE SLABS OR ATTACH TO STRUCTURAL STEEL. INSTALL ADDITIONAL ATTACHMENTS AT CONCENTRATED LOADS, INCLUDING VALVES, FLANGES, AND STRAINERS, NPS 2-1/2 AND LARGER AND AT CHANGES IN DIRECTION OF INSTALL CONCRETE INSERTS BEFORE CONCRETE IS PLACED; FASTEN INSERTS TO FORMS AND INSTALL REINFORCING BARS THROUGH OPENINGS AT TOP OF INSERTS.
K. LOAD DISTRIBUTION: INSTALL HANGERS AND SUPPORTS SO PIPING LIVE AND DEAD LOADS AND STRESSES FROM MOVEMENT WILL NOT BE TRANSMITTED TO CONNECTED EQUIPMENT.
L. PIPE SLOPES: INSTALL HANGERS AND SUPPORTS TO PROVIDE INDICATED PIPE SLOPES AND SO MAXIMUM PIPE DEFLECTIONS ALLOWED BY ASME B31.9 (FOR BUILDING SERVICES PIPING) ARE NOT EXCEEDED.
M. INSULATED PIPING: COMPLY WITH THE FOLLOWING:
1. ATTACH CLAMPS AND SPACERS TO PIPING.
a. PIPING OPERATING ABOVE AMBIENT AIR TEMPERATURE: CLAMP MAY PROJECT THROUGH INSULATION.
b. PIPING OPERATING BELOW AMBIENT AIR TEMPERATURE: USE THERMAL-HANGER SHIELD INSERT WITH CLAMP SIZED TO MATCH OD OF INSERT.
c. DO NOT EXCEED PIPE STRESS LIMITS ACCORDING TO ASME B31.9 FOR BUILDING SERVICES PIPING.
2. INSTALL MSS SP-58, TYPE 39, PROTECTION SADDLES IF INSULATION WITHOUT VAPOR BARRIER IS INDICATED. FILL INTERIOR VOIDS WITH INSULATION THAT MATCHES ADJOINING INSULATION.
3. INSTALL MSS SP-58, TYPE 40, PROTECTIVE SHIELDS ON COLD PIPING WITH VAPOR BARRIER. SHIELDS SHALL SPAN AN ARC OF 180 DEGREES.
4. SHIELD DIMENSIONS FOR PIPE: NOT LESS THAN THE FOLLOWING:
a. NPS 1/4 TO NPS 3-1/2: 12 INCHES LONG AND 0.048 INCH THICK.
b. NPS 4: 12 INCHES LONG AND 0.06 INCH THICK.
c. NPS 5 AND NPS 6: 18 INCHES LONG AND 0.06 INCH THICK.
d. NPS 8 TO NPS 14: 24 INCHES LONG AND 0.075 INCH THICK.
e. NPS 16 TO NPS 24: 24 INCHES LONG AND 0.105 INCH THICK.
5. PIPES NPS 8 AND LARGER: INCLUDE WOOD INSERTS.
6. INSERT MATERIAL: LENGTH AT LEAST AS LONG AS PROTECTIVE SHIELD.
7. THERMAL-HANGER SHIELDS: INSTALL WITH INSULATION SAME THICKNESS AS PIPING INSULATION.

3.3 EQUIPMENT SUPPORTS
A. FABRICATE STRUCTURAL-STEEL STANDS TO SUSPEND EQUIPMENT FROM STRUCTURE OVERHEAD OR TO SUPPORT EQUIPMENT ABOVE FLOOR.
B. GROUTING: PLACE GROUT UNDER SUPPORTS FOR EQUIPMENT AND MAKE SMOOTH BEARING SURFACE.
C. PROVIDE LATERAL BRACING, TO PREVENT SWAYING, FOR EQUIPMENT SUPPORTS.

3.4 METAL FABRICATIONS
A. CUT, DRILL, AND FIT MISCELLANEOUS METAL FABRICATIONS FOR TRAPEZE PIPE HANGERS AND EQUIPMENT SUPPORTS.
B. FIT EXPOSED CONNECTIONS TOGETHER TO FORM HAIRLINE JOINTS. FIELD WELD CONNECTIONS THAT CANNOT BE SHOP WELDED BECAUSE OF SHIPPING SIZE LIMITATIONS.
C. FIELD WELDING: COMPLY WITH AWS D1.1 PROCEDURES FOR SHIELDED METAL ARC WELDING, APPEARANCE AND QUALITY OF WELDS, AND METHODS USED IN CORRECTING WELDING WORK, AND WITH THE FOLLOWING:
1. USE MATERIALS AND METHODS THAT MINIMIZE DISTORTION AND DEVELOP STRENGTH AND CORROSION RESISTANCE OF BASE METALS.
2. OBTAIN FUSION WITHOUT UNDERCUT OR OVERLAP.
3. REMOVE WELDING FLUX IMMEDIATELY.
4. FINISH WELDS AT EXPOSED CONNECTIONS SO NO ROUGHNESS SHOWS AFTER FINISHING AND CONTOURS OF WELDED SURFACES MATCH ADJACENT CONTOURS.

3.5 ADJUSTING
A. HANGER ADJUSTMENTS: ADJUST HANGERS TO DISTRIBUTE LOADS EQUALLY ON ATTACHMENTS AND TO ACHIEVE INDICATED SLOPE OF PIPE.

3.6 PAINTING
A. TOUCH UP: CLEAN FIELD WELDS AND ABRADED AREAS OF SHOP PAINT. PAINT EXPOSED AREAS IMMEDIATELY AFTER ERECTING HANGERS AND SUPPORTS. USE SAME MATERIALS AS USED FOR SHOP PAINTING. COMPLY WITH SSPC-PA 1 REQUIREMENTS FOR TOUCHING UP FIELD-PAINTED SURFACES.
1. APPLY PAINT BY BRUSH OR SPRAY TO PROVIDE MINIMUM DRY FILM THICKNESS OF 2.0 MILS.
B. GALVANIZED SURFACES: CLEAN WELDS, BOLTED CONNECTIONS, AND ABRADED AREAS AND APPLY GALVANIZING-REPAIR PAINT TO COMPLY WITH ASTM A 780.

SECTION 220553 - IDENTIFICATION FOR PLUMBING PIPING AND EQUIPMENT
PART 1: GENERAL

1.1 SUMMARY
A. THIS SECTION INCLUDES THE FOLLOWING PLUMBING IDENTIFICATION MATERIALS AND THEIR INSTALLATION:
1. EQUIPMENT MARKERS.
2. ACCESS PANEL AND DOOR MARKERS.
3. PIPE MARKERS.
4. VALVE TAGS.
5. VALVE SCHEDULES.

1.2 SUBMITTALS
A. PRODUCT DATA: FOR EACH TYPE OF PRODUCT INDICATED.
B. VALVE NUMBERING SCHEME.
C. VALVE SCHEDULES: FOR EACH PIPING SYSTEM. FURNISH EXTRA COPIES (IN ADDITION TO MOUNTED COPIES) TO INCLUDE IN MAINTENANCE MANUALS.

1.3 QUALITY ASSURANCE
A. ASME COMPLIANCE: COMPLY WITH ASME A13.1, "SCHEME FOR THE IDENTIFICATION OF PIPING SYSTEMS," FOR LETTER SIZE, LENGTH OF COLOR FIELD, COLORS, AND VIEWING ANGLES OF IDENTIFICATION DEVICES FOR PIPING.

1.4 COORDINATION
A. COORDINATE INSTALLATION OF IDENTIFYING DEVICES WITH COMPLETION OF COVERING AND PAINTING OF SURFACES WHERE DEVICES ARE TO BE APPLIED.
B. COORDINATE INSTALLATION OF IDENTIFYING DEVICES WITH LOCATION OF ACCESS PANELS AND DOORS.
C. INSTALL IDENTIFYING DEVICES BEFORE INSTALLING ACOUSTICAL CEILINGS AND SIMILAR CONCEALMENT.

PART 2: PRODUCTS

2.1 MANUFACTURERS
A. MANUFACTURERS: SUBJECT TO COMPLIANCE WITH REQUIREMENTS, PROVIDE PRODUCTS BY THE MANUFACTURERS SPECIFIED.
1. BRADY CORP.
2. SETON.
3. WESTLINE.

2.2 EQUIPMENT IDENTIFICATION DEVICES
A. EQUIPMENT MARKERS: ENGRAVED, LAMINATED PLASTIC WITH BLACK SURFACE AND WHITE CORE. WHEN USED EXPOSED IN FINISHED ROOMS, PROVIDE WHITE SURFACE AND BLACK CORE. UV RATED FOR EXTERIOR EQUIPMENT. INCLUDE CONTACT-TYPE, PERMANENT ADHESIVE.
1. TERMINOLOGY: MATCH SCHEDULES AS CLOSELY AS POSSIBLE.
2. DATA:
a. UNIT MARK/DESIGNATION.
b. EQUIPMENT SERVICE/AREA SERVED.
3. SIZE: 2-1/2 BY 4 INCHES FOR CONTROL DEVICES, DAMPERS, AND VALVES; 4-1/2 BY 6 INCHES FOR EQUIPMENT.
B. ACCESS PANEL AND DOOR MARKERS: 1/16-INCH- THICK, ENGRAVED LAMINATED PLASTIC, WHITE SURFACE AND BLACK CORE, WITH ABBREVIATED TERMS AND NUMBERS CORRESPONDING TO IDENTIFICATION. PROVIDE 1/8-INCH CENTER HOLE FOR ATTACHMENT.
1. FASTENERS: SELF-TAPPING, STAINLESS-STEEL SCREWS.

2.3 PIPING IDENTIFICATION DEVICES
A. MANUFACTURED PIPE MARKERS, GENERAL: PREPRINTED, COLOR-CODED, WITH LETTERING INDICATING SERVICE, AND SHOWING DIRECTION OF FLOW.
1. COLORS: COMPLY WITH ASME A13.1, UNLESS OTHERWISE INDICATED.
2. LETTERING:
a. DOMESTIC COLD WATER.
b. DOMESTIC HOT WATER/DOMESTIC HOT WATER RECIRCULATING.
c. 140F DOMESTIC HOT WATER
d. SANITARY WASTE/SANITARY VENT.
e. GREASE WASTE.
f. STORM/STORM OVERFLOW.
g. NATURAL GAS/LIQUID PROPANE.
3. PIPES WITH OD, INCLUDING INSULATION, LESS THAN 6 INCHES: FULL-BAND PIPE MARKERS EXTENDING 360 DEGREES AROUND PIPE AT EACH LOCATION.
4. PIPES WITH OD, INCLUDING INSULATION, 6 INCHES AND LARGER: EITHER FULL-BAND OR STRIP-TYPE PIPE MARKERS AT LEAST THREE TIMES LETTER HEIGHT AND OF LENGTH REQUIRED FOR LABEL.
5. ARROWS: INTEGRAL WITH PIPING SYSTEM SERVICE LETTERING TO ACCOMMODATE BOTH DIRECTIONS; OR AS SEPARATE UNIT ON EACH PIPE MARKER TO INDICATE DIRECTION OF FLOW.
B. PRETENSIONED PIPE MARKERS: PRECOILED SEMI-RIGID PLASTIC FORMED TO COVER FULL CIRCUMFERENCE OF PIPE AND TO ATTACH TO PIPE WITHOUT ADHESIVE.
C. SHAPED PIPE MARKERS: PREFORMED SEMI-RIGID PLASTIC FORMED TO PARTIALLY COVER CIRCUMFERENCE OF PIPE AND TO ATTACH TO PIPE WITH MECHANICAL FASTENERS THAT DO NOT PENETRATE INSULATION VAPOR BARRIER.
D. MARKER DETAILS, O.D. OF LINE OR COVERING (INCHES):
1. LESS THAN 3/4": 8 INCH LONG COLOR BAND, 1/2" HIGH LETTERS.
2. 3/4" TO 2": 8 INCH LONG COLOR BAND, 3/4" HIGH LETTERS.
3. 2-1/2" TO 6": 12 INCH LONG COLOR BAND, 1-1/2" HIGH LETTERS.
4. OVER 6": 24 INCH LONG COLOR BAND, 2-1/2" HIGH LETTERS.

2.4 VALVE TAGS
A. VALVE TAGS: STAMPED OR ENGRAVED WITH 1/4-INCH LETTERS FOR PIPING SYSTEM ABBREVIATION AND 1/2-INCH NUMBERS, WITH NUMBERING SCHEME. PROVIDE 5/32-INCH HOLE FOR FASTENER.
1. MATERIAL: 0.032-INCH- THICK BRASS.
2. VALVE-TAG FASTENERS: BRASS WIRE-LINK OR BEADED CHAIN; OR S-HOOK.

2.5 VALVE SCHEDULES
A. VALVE SCHEDULES: FOR EACH PIPING SYSTEM, ON STANDARD-SIZE BOND PAPER. TABULATE VALVE NUMBER, PIPING SYSTEM, SYSTEM ABBREVIATION (AS SHOWN ON VALVE TAG), LOCATION OF VALVE (ROOM OR SPACE), NORMAL-OPERATING POSITION (OPEN, CLOSED, OR MODULATING), AND VARIATIONS FOR IDENTIFICATION. MARK VALVES FOR EMERGENCY SHUTOFF AND SIMILAR SPECIAL USES.
1. VALVE-SCHEDULE FRAMES: GLAZED DISPLAY FRAME FOR REMOVABLE MOUNTING ON MASONRY WALLS FOR EACH PAGE OF VALVE SCHEDULE. INCLUDE MOUNTING SCREWS.
2. FRAME: EXTRUDED ALUMINUM.
3. GLAZING: ASTM C 1036, TYPE I, CLASS 1, GLAZING QUALITY B, 2.5-MM, SINGLE-THICKNESS GLASS.

PART 3: EXECUTION

3.1 EQUIPMENT IDENTIFICATION
A. INSTALL EQUIPMENT MARKERS WITH PERMANENT ATTACHMENT ON OR NEAR EACH MAJOR ITEM OF MECHANICAL EQUIPMENT.
1. LETTER SIZE: MINIMUM 1/4 INCH FOR NAME OF UNITS IF VIEWING DISTANCE IS LESS THAN 24 INCHES, 1/2 INCH FOR VIEWING DISTANCES UP TO 72 INCHES, AND PROPORTIONATELY LARGER LETTERING FOR GREATER VIEWING DISTANCES. INCLUDE SECONDARY LETTERING TWO-THIRDS TO THREE-FOURTHS THE SIZE OF PRINCIPAL LETTERING.
2. DATA: IDENTIFY UNITS, DISTINGUISHING AMONG MULTIPLE UNITS.
3. LOCATE MARKERS WHERE ACCESSIBLE AND VISIBLE. INCLUDE MARKERS FOR THE FOLLOWING GENERAL CATEGORIES OF EQUIPMENT:
l. WATER HEATERS.
m. MIXING VALVES.
n. BACKFLOW PREVENTERS.
o. EXPANSION TANKS.

3.2 PIPING IDENTIFICATION
A. INSTALL MANUFACTURED PIPE MARKERS INDICATING SERVICE ON EACH PIPING SYSTEM. INSTALL WITH FLOW INDICATION ARROWS SHOWING DIRECTION OF FLOW.
1. PIPES WITH OD, INCLUDING INSULATION, LESS THAN 6 INCHES: PRETENSIONED PIPE MARKERS. USE SIZE TO ENSURE A TIGHT FIT.
2. PIPES WITH OD, INCLUDING INSULATION, 6 INCHES AND LARGER: SHAPED PIPE MARKERS. USE SIZE TO MATCH PIPE AND SECURE WITH FASTENERS.
B. LOCATE PIPE MARKERS WHERE PIPING IS EXPOSED IN FINISHED SPACES; MACHINE ROOMS; ACCESSIBLE MAINTENANCE SPACES SUCH AS SHAFTS, TUNNELS, AND PLENUMS; CEILING SPACES AND UNDER FLOOR AREAS; AND EXTERIOR NON-CONCEALED LOCATIONS AS FOLLOWS:
1. NEAR EACH VALVE AND CONTROL DEVICE.
2. NEAR EACH BRANCH CONNECTION, EXCLUDING SHORT TAKEOFFS FOR FIXTURES AND TERMINAL UNITS. WHERE FLOW PATTERN IS NOT OBVIOUS, MARK EACH PIPE AT BRANCH.
3. NEAR PENETRATIONS THROUGH WALLS, FLOORS, CEILINGS, AND NON-ACCESSIBLE ENCLOSURES.
4. AT ACCESS DOORS, MANHOLES, AND SIMILAR ACCESS POINTS THAT PERMIT VIEW OF CONCEALED PIPING.
5. NEAR MAJOR EQUIPMENT ITEMS AND OTHER POINTS OF ORIGINATION AND TERMINATION.
6. SPACED AT MAXIMUM INTERVALS OF 50 FEET ALONG EACH RUN. REDUCE INTERVALS TO 25 FEET IN AREAS OF CONGESTED PIPING AND EQUIPMENT.

3.3 VALVE-TAG INSTALLATION
A. INSTALL TAGS ON MAIN AND BRANCH SHUT-OFF VALVES AND CONTROL DEVICES IN PIPING SYSTEMS, EXCEPT THE FOLLOWING: CHECK VALVES; VALVES WITHIN FACTORY-FABRICATED EQUIPMENT UNITS; PLUMBING FIXTURE SUPPLY STOPS; SHUTOFF VALVES; FAUCETS; CONVENIENCE AND LAWN-WATERING HOSE CONNECTIONS; AND HVAC TERMINAL DEVICES AND SIMILAR ROUGHING-IN CONNECTIONS OF END-USE FIXTURES AND UNITS. INSTALL VALVE TAGS FOR OTHER VALVES INCLUDING THE FOLLOWING: MAIN SYSTEM SHUTOFF VALVES, VALVES ON PIPING LEAVING CHASES, BRANCH OR RISER SHUTOFF VALVES. LIST TAGGED VALVES IN A VALVE SCHEDULE.
B. VALVE-TAG APPLICATION SCHEDULE: TAG VALVES ACCORDING TO SIZE, SHAPE, AND COLOR SCHEME AND WITH CAPTIONS SIMILAR TO THOSE INDICATED IN THE FOLLOWING:
1. VALVE-TAG SIZE AND SHAPE:
a. DOMESTIC COLD WATER: 2 INCHES, ROUND.
b. DOMESTIC HOT WATER: 2 INCHES, ROUND.
c. PROPANE GAS: 2 INCHES, ROUND.
2. VALVE-TAG COLOR:
a. DOMESTIC COLD WATER: NATURAL.
b. DOMESTIC HOT WATER: NATURAL.
c. PROPANE GAS: NATURAL.
3. LETTER COLOR:
a. DOMESTIC COLD WATER: BLACK.
b. DOMESTIC HOT WATER: BLACK.
c. PROPANE GAS: BLACK.

3.4 VALVE-SCHEDULE INSTALLATION
A. MOUNT VALVE SCHEDULE ON WALL IN ACCESSIBLE LOCATION IN WATER SERVICE ROOM.

3.5 ADJUSTING
A. RELOCATE PLUMBING IDENTIFICATION MATERIALS AND DEVICES THAT HAVE BECOME VISUALLY BLOCKED BY OTHER WORK.

SECTION 220700 - PLUMBING INSULATION (SEE SCHEDULE FOR COORDINATION WITH THIS PROJECT)
PART 1 - GENERAL

1.1 SUMMARY
A. SECTION INCLUDES:
1. INSULATION MATERIALS:
a. FLEXIBLE ELASTOMERIC.
b. MINERAL FIBER.
2. INSULATING CEMENTS.
3. ADHESIVES.
4. MASTICS.
5. SEALANTS.
6. FACTORY-APPLIED JACKETS.
7. FIELD-APPLIED JACKETS.
8. TAPES.
9. SECUREMENTS.

1.2 SUBMITTALS
A. PRODUCT DATA: FOR EACH TYPE OF PRODUCT INDICATED.
B. SHOP DRAWINGS:
1. DETAIL APPLICATION OF PROTECTIVE SHIELDS, SADDLES, AND INSERTS AT HANGERS FOR EACH TYPE OF INSULATION AND HANGER.
2. DETAIL ATTACHMENT AND COVERING OF HEAT TRACING INSIDE INSULATION.
3. DETAIL INSULATION APPLICATION AT PIPE EXPANSION JOINTS FOR EACH TYPE OF INSULATION.
4. DETAIL INSULATION APPLICATION AT ELBOWS, FITTINGS, FLANGES, VALVES, AND SPECIALTIES FOR EACH TYPE OF INSULATION.
5. DETAIL REMOVABLE INSULATION AT PIPING SPECIALTIES, EQUIPMENT CONNECTIONS, AND ACCESS PANELS.
6. DETAIL APPLICATION OF FIELD-APPLIED JACKETS.
7. DETAIL APPLICATION AT LINKAGES OF CONTROL DEVICES.
8. DETAIL FIELD APPLICATION FOR EACH EQUIPMENT TYPE.
C. FIELD QUALITY-CONTROL REPORTS.

1.3 QUALITY ASSURANCE
A. FIRE-TEST-RESPONSE CHARACTERISTICS: INSULATION AND RELATED MATERIALS SHALL HAVE FIRE-TEST-RESPONSE CHARACTERISTICS INDICATED, AS DETERMINED BY TESTING IDENTICAL PRODUCTS PER ASTM E 84, BY A TESTING AND INSPECTING AGENCY ACCEPTABLE TO AUTHORITIES HAVING JURISDICTION. FACTORY LABEL INSULATION AND JACKET MATERIALS AND ADHESIVE, MASTIC, TAPES, AND CEMENT MATERIAL CONTAINERS, WITH APPROPRIATE MARKINGS OF APPLICABLE TESTING AND INSPECTING AGENCY.
1. INSULATION INSTALLED INDOORS: FLAME-SPREAD INDEX OF 25 OR LESS, AND SMOKE-DEVELOPED INDEX OF 50 OR LESS.
2. INSULATION INSTALLED OUTDOORS: FLAME-SPREAD INDEX OF 75 OR LESS, AND SMOKE-DEVELOPED INDEX OF 150 OR LESS.

PART 2 - PRODUCTS
2.1 INSULATION MATERIALS
A. COMPLY WITH SCHEDULED REQUIREMENTS ILLUSTRATED ON THE DRAWINGS FOR WHERE INSULATING MATERIALS SHALL BE APPLIED.
B. PRODUCTS SHALL NOT CONTAIN ASBESTOS, LEAD, MERCURY, OR MERCURY COMPOUNDS.
C. PRODUCTS THAT COME IN CONTACT WITH STAINLESS STEEL SHALL HAVE A LEACHABLE CHLORIDE CONTENT OF LESS THAN 50 PPM WHEN TESTED ACCORDING TO ASTM C 871.
D. INSULATION MATERIALS FOR USE ON AUSTENITIC STAINLESS STEEL SHALL BE QUALIFIED AS ACCEPTABLE ACCORDING TO ASTM C 795.
E. FOAM INSULATION MATERIALS SHALL NOT USE CFC OR HCFC BLOWING AGENTS IN THE MANUFACTURING PROCESS.
F. FLEXIBLE ELASTOMERIC: CLOSED-CELL, SPONGE- OR EXPANDED-RUBBER MATERIALS. COMPLY WITH ASTM C 534, TYPE I FOR TUBULAR MATERIALS AND TYPE II FOR SHEET MATERIALS.
1. PRODUCTS: SUBJECT TO COMPLIANCE WITH REQUIREMENTS, PROVIDE ONE OF THE FOLLOWING:
a. AEROFLEX USA INC.; AEROCEL.
b. ARMACELL LLC; AP ARMAFLEX.
c. RBX CORPORATION; INSUL-SHEET 1800 AND INSUL-TUBE 180.
G. MINERAL-FIBER, PREFORMED PIPE INSULATION:
1. PRODUCTS: SUBJECT TO COMPLIANCE WITH REQUIREMENTS, PROVIDE ONE OF THE FOLLOWING:
a. JOHNS MANVILLE; MICRO-LOK.
b. KNAUF INSULATION; 1000 PIPE INSULATION.
c. OWENS CORNING; FIBERGLAS PIPE INSULATION.
2. TYPE I, 850 DEG F MATERIALS: MINERAL OR GLASS FIBERS BONDED WITH A THERMOSETTING RESIN. COMPLY WITH ASTM C 547.
3. TYPE I, GRADE A, WITH FACTORY-APPLIED ASJ-SSL. FACTORY-APPLIED JACKET REQUIREMENTS ARE SPECIFIED IN "FACTORY-APPLIED JACKETS" ARTICLE.
I. MINERAL-FIBER, PIPE AND TANK INSULATION: MINERAL OR GLASS FIBERS BONDED WITH A THERMOSETTING RESIN. SEMIRIGID BOARD MATERIAL WITH FACTORY-APPLIED ASJ COMPLYING WITH ASTM C 1393, TYPE II OR TYPE IIIA CATEGORY 2, OR WITH PROPERTIES SIMILAR TO ASTM C 612, TYPE IB. NOMINAL DENSITY IS 2.5 LB/CU. FT. OR MORE. THERMAL CONDUCTIVITY (K-VALUE) AT 100 DEG F IS 0.29 BTU X IN./H X SQ. FT. X DEG F OR LESS. FACTORY-APPLIED JACKET REQUIREMENTS ARE SPECIFIED IN "FACTORY-APPLIED JACKETS" ARTICLE.
1. PRODUCTS: SUBJECT TO COMPLIANCE WITH REQUIREMENTS, PROVIDE ONE OF THE FOLLOWING:
a. CERTAINTEED CORP.; CRIMPWRAP.
b. JOHNS MANVILLE; MICROFLEX.
c. KNAUF INSULATION; PIPE AND TANK INSULATION.
d. OWENS CORNING; FIBERGLAS PIPE AND TANK INSULATION.

2.2 INSULATING CEMENTS
A. MINERAL-FIBER, HYDRAULIC-SETTING INSULATING AND FINISHING CEMENT: COMPLY WITH ASTM C 449/C 449M.
1. PRODUCTS: SUBJECT TO COMPLIANCE WITH REQUIREMENTS, PROVIDE ONE OF THE FOLLOWING:
a. INSULCO, DIVISION OF MFS, INC.; SMOOTHKOTE.
b. INSULATION MFG. CO., INC.; PIK NO. 127, AND QUIK-COTE.
c. ROCK WOOL MANUFACTURING COMPANY; DELTA ONE SHOT.

2.3 ADHESIVES
A. MATERIALS SHALL BE COMPATIBLE WITH INSULATION MATERIALS, JACKETS, AND SUBSTRATES AND FOR BONDING INSULATION TO ITSELF AND TO SURFACES TO BE INSULATED, UNLESS OTHERWISE INDICATED.
1. PRODUCTS: SUBJECT TO COMPLIANCE WITH REQUIREMENTS, PROVIDE ONE OF THE FOLLOWING:
a. CHILDERS PRODUCTS, DIVISION OF ITW; CP-96.
b. FOSTER PRODUCTS CORPORATION, H. B. FULLER COMPANY; 81-33.
B. FLEXIBLE ELASTOMERIC AND POLYOLEFIN ADHESIVE: COMPLY WITH MIL-A-24179A, TYPE II, CLASS I.
1. PRODUCTS: SUBJECT TO COMPLIANCE WITH REQUIREMENTS, PROVIDE ONE OF THE FOLLOWING:
a. AEROFLEX USA INC.; AEROSEAL.
b. ARMACELL LLC; 520 ADHESIVE.
c. FOSTER PRODUCTS CORPORATION, H. B. FULLER COMPANY.
d. RBX CORPORATION; RUBATEX CONTACT ADHESIVE.
C. MINERAL-FIBER ADHESIVE: COMPLY WITH MIL-A-3316C, CLASS 2, GRADE A.
1. PRODUCTS: SUBJECT TO COMPLIANCE WITH REQUIREMENTS, PROVIDE ONE OF THE FOLLOWING:
a. CHILDERS PRODUCTS, DIVISION OF ITW; CP-82.
b. FOSTER PRODUCTS CORPORATION, H. B. FULLER COMPANY; 85-20.
c. ITW TACC, DIVISION OF ILLINOIS TOOL WORKS; S-90/80.
D. ASJ ADHESIVE, AND FSK AND PVDC JACKET ADHESIVE: COMPLY WITH MIL-A-3316C, CLASS 2, GRADE A FOR BONDING INSULATION JACKET LAP SEAMS AND JOINTS.
1. PRODUCTS: SUBJECT TO COMPLIANCE WITH REQUIREMENTS, PROVIDE ONE OF THE FOLLOWING:
a. CHILDERS PRODUCTS, DIVISION OF ITW; CP-82.
b. FOSTER PRODUCTS CORPORATION, H. B. FULLER COMPANY; 85-20.
E. PVC JACKET ADHESIVE: COMPATIBLE WITH PVC JACKET.
1. PRODUCTS: SUBJECT TO COMPLIANCE WITH REQUIREMENTS, PROVIDE ONE OF THE FOLLOWING:
a. DOW CHEMICAL COMPANY (THE); 739, DOW SILICONE.
b. JOHNS-MANVILLE; ZESTON PERMA-WELD, CEEL-TITE SOLVENT WELDING ADHESIVE.
c. SPEEDLINE CORPORATION; SPEEDLINE VINYL ADHESIVE.

2.4 MASTICS
A. MATERIALS SHALL BE COMPATIBLE WITH INSULATION MATERIALS, JACKETS, AND SUBSTRATES; COMPLY WITH MIL-C-19565C, TYPE II.
B. VAPOR-BARRIER MASTIC: WATER BASED; SUITABLE FOR INDOOR AND OUTDOOR USE ON BELOW AMBIENT SERVICES.
1. PRODUCTS: SUBJECT TO COMPLIANCE WITH REQUIREMENTS, PROVIDE ONE OF THE FOLLOWING:
a. CHILDERS PRODUCTS, DIVISION OF ITW; CP-35.
b. FOSTER PRODUCTS CORPORATION, H. B. FULLER COMPANY; 30-90.
c. MARATHON INDUSTRIES, INC.; 590.
2. WATER-VAPOR PERMEANCE: ASTM E 96, PROCEDURE B, 0.013 PERM AT 43-MIL DRY FILM THICKNESS.
3. SERVICE TEMPERATURE RANGE: MINUS 20 TO PLUS 180 DEG F.
4. SOLIDS CONTENT: ASTM D 1644, 59 PERCENT BY VOLUME AND 71 PERCENT BY WEIGHT.
5. COLOR: WHITE.

2.5 SEALANTS
A. JOINT SEALANTS:
1. JOINT SEALANTS FOR POLYSTYRENE PRODUCTS: SUBJECT TO COMPLIANCE WITH REQUIREMENTS, PROVIDE ONE OF THE FOLLOWING:
a. CHILDERS PRODUCTS, DIVISION OF ITW; CP-70.
b. FOSTER PRODUCTS CORPORATION, H. B. FULLER COMPANY; 30-45/30-46.
c. MARATHON INDUSTRIES, INC.; 405.
2. MATERIALS SHALL BE COMPATIBLE WITH INSULATION MATERIALS, JACKETS, AND SUBSTRATES.
3. PERMANENTLY FLEXIBLE, ELASTOMERIC SEALANT.
4. SERVICE TEMPERATURE RANGE: MINUS 100 TO PLUS 300 DEG F.
5. COLOR: WHITE OR GRAY.
B. FSK AND METAL JACKET FLASHING SEALANTS:
1. PRODUCTS: SUBJECT TO COMPLIANCE WITH REQUIREMENTS, PROVIDE ONE OF THE FOLLOWING:
a. CHILDERS PRODUCTS, DIVISION OF ITW; CP-76-8.
b. FOSTER PRODUCTS CORPORATION, H. B. FULLER COMPANY; 95-44.
c. MARATHON INDUSTRIES, INC.; 405.
2. MATERIALS SHALL BE COMPATIBLE WITH INSULATION MATERIALS, JACKETS, AND SUBSTRATES.
3. FIRE- AND WATER-RESISTANT, FLEXIBLE, ELASTOMERIC SEALANT.
4. SERVICE TEMPERATURE RANGE: MINUS 40 TO PLUS 250 DEG F.
5. COLOR: ALUMINUM.
C. ASJ FLASHING SEALANTS, AND VINYL, PVDC, AND PVC JACKET FLASHING SEALANTS:
1. PRODUCTS: SUBJECT TO COMPLIANCE WITH REQUIREMENTS, PROVIDE ONE OF THE FOLLOWING:
a. CHILDERS PRODUCTS, DIVISION OF ITW; CP-76.
2. MATERIALS SHALL BE COMPATIBLE WITH INSULATION MATERIALS, JACKETS, AND SUBSTRATES.
3. FIRE- AND WATER-RESISTANT, FLEXIBLE, ELASTOMERIC SEALANT.
4. SERVICE TEMPERATURE RANGE: MINUS 40 TO PLUS 250 DEG F.
5. COLOR: WHITE.

2.6 FACTORY-APPLIED JACKETS
A. INSULATION SYSTEM SCHEDULES INDICATE FACTORY-APPLIED JACKETS ON VARIOUS APPLICATIONS. WHEN FACTORY-APPLIED JACKETS ARE INDICATED, COMPLY WITH THE FOLLOWING:
1. ASJ: WHITE, KRAFT-PAPER, FIBERGLASS-REINFORCED SCRIM WITH ALUMINUM-FOIL BACKING; COMPLYING WITH ASTM C 1136, TYPE I.
2. ASJ-SSL: ASJ WITH SELF-SEALING, PRESSURE-SENSITIVE, ACRYLIC-BASED ADHESIVE COVERED BY A REMOVABLE PROTECTIVE STRIP; COMPLYING WITH ASTM C 1136, TYPE I.
3. FSK JACKET: ALUMINUM-FOIL, FIBERGLASS-REINFORCED SCRIM WITH KRAFT-PAPER BACKING; COMPLYING WITH ASTM C 1136, TYPE II.

2.8 FIELD-APPLIED JACKETS
A. FIELD-APPLIED JACKETS SHALL COMPLY WITH ASTM C 921, TYPE I, UNLESS OTHERWISE INDICATED.
B. PVC JACKET: HIGH-IMPACT-RESISTANT, UV-RESISTANT PVC COMPLYING WITH ASTM D 1784, CLASS 16354-C; THICKNESS AS SCHEDULED; ROLL STOCK READY FOR SHOP OR FIELD CUTTING AND FORMING. THICKNESS IS INDICATED IN FIELD-APPLIED JACKET SCHEDULES.
1. PRODUCTS: SUBJECT TO COMPLIANCE WITH REQUIREMENTS, PROVIDE ONE OF THE FOLLOWING:
a. JOHNS MANVILLE; ZESTON.
b. PLASTICS, INC.; FG SERIES.
c. PROTO PVC CORPORATION; LOSMOKE.
d. SPEEDLINE CORPORATION; SMOKESAFE.
2. ADHESIVE: AS RECOMMENDED BY JACKET MATERIAL MANUFACTURER.
3. COLOR: WHITE.
4. FACTORY-FABRICATED FITTING COVERS TO MATCH JACKET IF AVAILABLE; OTHERWISE, FIELD FABRICATE.
a. 45- AND 90-DEGREE, SHORT- AND LONG-RADIUS ELBOWS, TEES, VALVES, FLANGES, UNIONS, REDUCERS, END CAPS, SOIL-PIPE HUBS, TRAPS, MECHANICAL JOINTS, AND P-TRAP AND SUPPLY COVERS FOR LAVATORIES.
5. FACTORY-FABRICATED TANK HEADS AND TANK SIDE PANELS.
C. ALUMINUM JACKET: COMPLY WITH ASTM B 209, ALLOY 3003, 3005, 3105 OR 5005, TEMPER H-14.
1. PRODUCTS: SUBJECT TO COMPLIANCE WITH REQUIREMENTS, PROVIDE ONE OF THE FOLLOWING:
a. CHILDERS PRODUCTS, DIVISION OF ITW; METAL JACKETING SYSTEMS.
b. PABCO METALS CORPORATION; SUREFIT.
c. RPR PRODUCTS, INC.; INSUL-MATE.
2. SHEET AND ROLL STOCK READY FOR SHOP OR FIELD SIZING OR FACTORY CUT AND ROLLED TO SIZE.
3. FINISH AND THICKNESS ARE INDICATED IN FIELD-APPLIED JACKET SCHEDULES.
4. MOISTURE BARRIER FOR INDOOR APPLICATIONS: 1-MIL- THICK, HEAT-BONDED POLYETHYLENE AND KRAFT PAPER.
5. MOISTURE BARRIER FOR OUTDOOR APPLICATIONS: 2.5-MIL- THICK POLYSURLYN.
6. FACTORY-FABRICATED FITTING COVERS:
a. SAME MATERIAL, FINISH, AND THICKNESS AS JACKET.
b. PREFORMED 2-PIECE OR GORE, 45- AND 90-DEGREE, SHORT- AND LONG-RADIUS ELBOWS.
c. TEE COVERS.
d. FLANGE AND UNION COVERS.
e. END CAPS.
f. BEVELED COLLARS.
g. VALVE COVERS.
h. FIELD FABRICATE FITTING COVERS ONLY IF FACTORY-FABRICATED FITTING COVERS ARE NOT AVAILABLE.

COMMONWEALTH OF VIRGINIA
PHILIP L. GENTRY
Lic. No. 025757
01/03/2024
PROFESSIONAL ENGINEER

COPYRIGHT AND DESIGN © 2023 NORMAN SMITH ARCHITECTURE
DRAWINGS AND SPECIFICATIONS AND THE IDEAS, DESIGNS AND ARRANGEMENTS REPRESENTED THEREIN ARE THE EXCLUSIVE PROPERTY OF THE ARCHITECT AND PROFESSIONAL ENGINEER AND ARE TO BE RETURNED UPON REQUEST. THEY ARE NOT TO BE DISCLOSED OR REPRODUCED IN ANY FORM EXCEPT AS AGREED IN WRITING BY THE ARCHITECT AND PROFESSIONAL ENGINEER. THEY ARE NOT TO BE USED FOR ANY PURPOSE NOT CONTEMPLATED BY THE CONT

2.9 TAPES
A. ASJ TAPE: WHITE VAPOR-RETARDER TAPE MATCHING FACTORY-APPLIED JACKET WITH ACRYLIC ADHESIVE, COMPLYING WITH ASTM C 1136.
1. PRODUCTS: SUBJECT TO COMPLIANCE WITH REQUIREMENTS, PROVIDE ONE OF THE FOLLOWING:
a. AVERY DENNISON CORPORATION, SPECIALTY TAPES DIVISION; FASSON 0835.
b. COMPAC CORP.; 104 AND 105.
c. IDEAL TAPE CO., INC., AN AMERICAN BILTRITE COMPANY; 428 AWF ASJ.
d. VENTURE TAPE; 1540 CW PLUS, 1542 CW PLUS, AND 1542 CW PLUS/SQ.
2. WIDTH: 3 INCHES.
3. THICKNESS: 11.5 MILS.
4. ADHESION: 90 OUNCES FORCE/INCH IN WIDTH.
5. ELONGATION: 2 PERCENT.
6. TENSILE STRENGTH: 40 LBF/INCH IN WIDTH.
7. ASJ TAPE DISKS AND SQUARES: PRECUT DISKS OR SQUARES OF ASJ TAPE.
B. FSK TAPE: FOIL-FACE, VAPOR-RETARDER TAPE MATCHING FACTORY-APPLIED JACKET WITH ACRYLIC ADHESIVE; COMPLYING WITH ASTM C1136.
1. PRODUCTS: SUBJECT TO COMPLIANCE WITH REQUIREMENTS, PROVIDE ONE OF THE FOLLOWING:
a. AVERY DENNISON CORPORATION, SPECIALTY TAPES DIVISION; FASSON 0827.
b. COMPAC CORP.; 110 AND 111.
c. IDEAL TAPE CO., INC., AN AMERICAN BILTRITE COMPANY; 491 AWF FSK.
d. VENTURE TAPE; 1525 CW, 1528 CW, AND 1528 CW/SQ.
2. WIDTH: 3 INCHES.
3. THICKNESS: 6.5 MILS.
4. ADHESION: 90 OUNCES FORCE/INCH IN WIDTH.
5. ELONGATION: 2 PERCENT.
6. TENSILE STRENGTH: 40 LBF/INCH IN WIDTH.
7. FSK TAPE DISKS AND SQUARES: PRECUT DISKS OR SQUARES OF FSK TAPE.
C. PVC TAPE: WHITE VAPOR-RETARDER TAPE MATCHING FIELD-APPLIED PVC JACKET WITH ACRYLIC ADHESIVE. SUITABLE FOR INDOOR AND OUTDOOR APPLICATIONS.
1. PRODUCTS: SUBJECT TO COMPLIANCE WITH REQUIREMENTS, PROVIDE ONE OF THE FOLLOWING:
a. AVERY DENNISON CORPORATION, SPECIALTY TAPES DIVISION; FASSON 0555.
b. COMPAC CORP.; 130.
c. IDEAL TAPE CO., INC., AN AMERICAN BILTRITE COMPANY; 370 WHITE PVC TAPE.
d. VENTURE TAPE; 1506 CW NS.
2. WIDTH: 2 INCHES.
3. THICKNESS: 6 MILS.
4. ADHESION: 64 OUNCES FORCE/INCH IN WIDTH.
5. ELONGATION: 500 PERCENT.
6. TENSILE STRENGTH: 18 LBF/INCH IN WIDTH.
D. ALUMINUM-FOIL TAPE: VAPOR-RETARDER TAPE WITH ACRYLIC ADHESIVE.
1. PRODUCTS: SUBJECT TO COMPLIANCE WITH REQUIREMENTS, PROVIDE ONE OF THE FOLLOWING:
a. AVERY DENNISON CORPORATION, SPECIALTY TAPES DIVISION; FASSON 0800.
b. COMPAC CORP.; 120.
c. IDEAL TAPE CO., INC., AN AMERICAN BILTRITE COMPANY; 488 AWF.
d. VENTURE TAPE; 3520 CW.
2. WIDTH: 2 INCHES.
3. THICKNESS: 3.7 MILS.
4. ADHESION: 100 OUNCES FORCE/INCH IN WIDTH.
5. ELONGATION: 5 PERCENT.
6. TENSILE STRENGTH: 34 LBF/INCH IN WIDTH.

2.10 SECUREMENTS
A. ALUMINUM BANDS: ASTM B 209, ALLOY 3003, 3005, 3105, OR 5005; TEMPER H-14, 0.020 INCH THICK, 3/4 INCH WIDE WITH WING OR CLOSED SEAL.
1. PRODUCTS: SUBJECT TO COMPLIANCE WITH REQUIREMENTS, PROVIDE ONE OF THE FOLLOWING:
a. CHILDERS PRODUCTS; BANDS.
b. PABCO METALS CORPORATION; BANDS.
c. RPR PRODUCTS, INC.; BANDS.
B. INSULATION PINS AND HANGERS:
1. METAL, ADHESIVELY ATTACHED, PERFORATED-BASE INSULATION HANGERS: BASEPLATE WELDED TO PROJECTING SPINDLE THAT IS CAPABLE OF HOLDING INSULATION, OF THICKNESS INDICATED, SECURELY IN POSITION INDICATED WHEN SELF-LOCKING WASHER IS IN COMPLY WITH THE FOLLOWING REQUIREMENTS:
a. PRODUCTS: SUBJECT TO COMPLIANCE WITH REQUIREMENTS, PROVIDE ONE OF THE FOLLOWING:
• AGM INDUSTRIES, INC.; TACTOO INSUL-HANGERS, SERIES T.
• GEMCO; PERFORATED BASE.
• MIDWEST FASTENERS, INC.; SPINDLE.
b. BASEPLATE: PERFORATED, GALVANIZED CARBON-STEEL SHEET, 0.030 INCH THICK BY 2 INCHES SQUARE.
c. SPINDLE: STAINLESS STEEL, FULLY ANNEALED, 0.106-INCH- DIAMETER SHANK, LENGTH TO SUIT DEPTH OF INSULATION INDICATED.
d. ADHESIVE: RECOMMENDED BY HANGER MANUFACTURER. PRODUCT WITH DEMONSTRATED CAPABILITY TO BOND INSULATION HANGER SECURELY TO SUBSTRATES INDICATED WITHOUT DAMAGING INSULATION, HANGERS, AND SUBSTRATES.
2. NONMETAL, ADHESIVELY ATTACHED, PERFORATED-BASE INSULATION HANGERS: BASEPLATE FASTENED TO PROJECTING SPINDLE THAT IS CAPABLE OF HOLDING INSULATION, OF THICKNESS INDICATED, SECURELY IN POSITION INDICATED WHEN SELF-LOCKING WASHER IS IN COMPLY WITH THE FOLLOWING REQUIREMENTS:
a. PRODUCTS: SUBJECT TO COMPLIANCE WITH REQUIREMENTS, PROVIDE ONE OF THE FOLLOWING:
• GEMCO; NYLON HANGERS.
• MIDWEST FASTENERS, INC.; NYLON INSULATION HANGERS.
b. BASEPLATE: PERFORATED, NYLON SHEET, 0.030 INCH THICK BY 1-1/2 INCHES IN DIAMETER.
c. SPINDLE: NYLON, 0.106-INCH- DIAMETER SHANK, LENGTH TO SUIT DEPTH OF INSULATION INDICATED, UP TO 2-1/2 INCHES.
d. ADHESIVE: RECOMMENDED BY HANGER MANUFACTURER. PRODUCT WITH DEMONSTRATED CAPABILITY TO BOND INSULATION HANGER SECURELY TO SUBSTRATES INDICATED WITHOUT DAMAGING INSULATION, HANGERS, AND SUBSTRATES.
3. INSULATION-RETAINING WASHERS: SELF-LOCKING WASHERS FORMED FROM 0.016-INCH- THICK, STAINLESS-STEEL SHEET, WITH BEVELED EDGE SIZED AS REQUIRED TO HOLD INSULATION SECURELY IN PLACE BUT NOT LESS THAN 1-1/2 INCHES IN DIAMETER.
a. PRODUCTS: SUBJECT TO COMPLIANCE WITH REQUIREMENTS, PROVIDE ONE OF THE FOLLOWING:
• AGM INDUSTRIES, INC.; RC-150.
• GEMCO; R-150.
• MIDWEST FASTENERS, INC.; WA-150.
• NELSON STUD WELDING; SPEED CLIPS.
b. PROTECT ENDS WITH CAPPED SELF-LOCKING WASHERS INCORPORATING A SPRING STEEL INSERT TO ENSURE PERMANENT RETENTION OF CAP IN EXPOSED LOCATIONS.
C. STAPLES: OUTWARD-CLINCHING INSULATION STAPLES, NOMINAL 3/4-INCH- WIDE, STAINLESS STEEL OR MONEL.
D. WIRE: 0.062-INCH SOFT-ANNEALED, STAINLESS STEEL.
1. MANUFACTURERS: SUBJECT TO COMPLIANCE WITH REQUIREMENTS, PROVIDE PRODUCTS BY ONE OF THE FOLLOWING:
a. C & F WIRE.
b. CHILDERS PRODUCTS.
c. RPR PRODUCTS, INC.

PART 3 - EXECUTION
3.1 PREPARATION
A. SURFACE PREPARATION: CLEAN AND DRY SURFACES TO RECEIVE INSULATION. REMOVE MATERIALS THAT WILL ADVERSELY AFFECT INSULATION APPLICATION.
B. COORDINATE INSULATION INSTALLATION WITH THE TRADE INSTALLING HEAT TRACING. COMPLY WITH REQUIREMENTS FOR HEAT TRACING THAT APPLY TO INSULATION.
C. MIX INSULATING CEMENTS WITH CLEAN POTABLE WATER; IF INSULATING CEMENTS ARE TO BE IN CONTACT WITH STAINLESS-STEEL SURFACES, USE DEMINERALIZED WATER.

3.2 GENERAL INSTALLATION REQUIREMENTS
A. INSTALL INSULATION MATERIALS, ACCESSORIES, AND FINISHES WITH SMOOTH, STRAIGHT, AND EVEN SURFACES; FREE OF VOIDS THROUGHOUT THE LENGTH OF EQUIPMENT AND PIPING INCLUDING FITTINGS, VALVES, AND SPECIALTIES.
B. INSTALL INSULATION MATERIALS, FORMS, VAPOR BARRIERS OR RETARDERS, JACKETS, AND THICKNESSES REQUIRED FOR EACH ITEM OF EQUIPMENT AND PIPE SYSTEM AS SPECIFIED IN INSULATION SYSTEM SCHEDULES.
C. INSTALL ACCESSORIES COMPATIBLE WITH INSULATION MATERIALS AND SUITABLE FOR THE SERVICE. INSTALL ACCESSORIES THAT DO NOT CORRODE, SOFTEN, OR OTHERWISE ATTACK INSULATION OR JACKET IN EITHER WET OR DRY STATE.
D. INSTALL INSULATION WITH LONGITUDINAL SEAMS AT TOP AND BOTTOM OF HORIZONTAL RUNS.
E. INSTALL MULTIPLE LAYERS OF INSULATION WITH LONGITUDINAL AND END SEAMS STAGGERED.
F. DO NOT WELD BRACKETS, CLIPS, OR OTHER ATTACHMENT DEVICES TO PIPING, FITTINGS, AND SPECIALTIES.
G. KEEP INSULATION MATERIALS DRY DURING APPLICATION AND FINISHING.
H. INSTALL INSULATION WITH TIGHT LONGITUDINAL SEAMS AND END JOINTS. BOND SEAMS AND JOINTS WITH ADHESIVE RECOMMENDED BY INSULATION MATERIAL MANUFACTURER.
I. INSTALL INSULATION WITH LEAST NUMBER OF JOINTS PRACTICAL.
J. WHERE VAPOR BARRIER IS INDICATED, SEAL JOINTS, SEAMS, AND PENETRATIONS IN INSULATION AT HANGERS, SUPPORTS, ANCHORS, AND OTHER PROJECTIONS WITH VAPOR-BARRIER MASTIC.
1. INSTALL INSULATION CONTINUOUSLY THROUGH HANGERS AND AROUND ANCHOR ATTACHMENTS.
2. FOR INSULATION APPLICATION WHERE VAPOR BARRIERS ARE INDICATED, EXTEND INSULATION ON ANCHOR LEGS FROM POINT OF ATTACHMENT TO SUPPORTED ITEM TO POINT OF ATTACHMENT TO STRUCTURE. TAPER AND SEAL ENDS AT ATTACHMENT TO STRUCTURE WITH VAPOR-BARRIER MASTIC. INSTALL INSERT MATERIALS AND INSTALL INSULATION TO TIGHTLY JOIN THE INSERT. SEAL INSULATION TO INSULATION INSERTS WITH ADHESIVE OR SEALING COMPOUND RECOMMENDED BY INSULATION MATERIAL MANUFACTURER.
3. COVER INSERTS WITH JACKET MATERIAL MATCHING ADJACENT PIPE INSULATION. INSTALL SHIELDS OVER JACKET, ARRANGED TO PROTECT JACKET FROM TEAR OR PUNCTURE BY HANGER, SUPPORT, AND SHIELD.
K. APPLY ADHESIVES, MASTICS, AND SEALANTS AT MANUFACTURER'S RECOMMENDED COVERAGE RATE AND WET AND DRY FILM THICKNESSES.
L. INSTALL INSULATION WITH FACTORY-APPLIED JACKETS AS FOLLOWS:
1. DRAW JACKET TIGHT AND SMOOTH.
2. COVER CIRCUMFERENTIAL JOINTS WITH 3-INCH- WIDE STRIPS, OF SAME MATERIAL AS INSULATION JACKET. SECURE STRIPS WITH ADHESIVE AND OUTWARD CLINCHING STAPLES ALONG BOTH EDGES OF STRIP, SPACED 4 INCHES O.C.
3. OVERLAP JACKET LONGITUDINAL SEAMS AT LEAST 1-1/2 INCHES. INSTALL INSULATION WITH LONGITUDINAL SEAMS AT BOTTOM OF PIPE. CLEAN AND DRY SURFACE TO RECEIVE SELF-SEALING LAP. STAPLE LAPS WITH OUTWARD CLINCHING STAPLES ALONG EDGE AT 4 INCHES O.C. (WHERE STAPLES ARE USED.)
4. FOR BELOW AMBIENT SERVICES, APPLY VAPOR-BARRIER MASTIC OVER STAPLES.
5. COVER JOINTS AND SEAMS WITH TAPE AS RECOMMENDED BY INSULATION MATERIAL MANUFACTURER TO MAINTAIN VAPOR SEAL.
6. WHERE VAPOR BARRIERS ARE INDICATED, APPLY VAPOR-BARRIER MASTIC ON SEAMS AND JOINTS AND AT ENDS ADJACENT TO PIPE FLANGES AND FITTINGS.
M. CUT INSULATION IN A MANNER TO AVOID COMPRESSING INSULATION MORE THAN 75 PERCENT OF ITS NOMINAL THICKNESS.
N. FINISH INSTALLATION WITH SYSTEMS AT OPERATING CONDITIONS. REPAIR JOINT SEPARATIONS AND CRACKING DUE TO THERMAL MOVEMENT.
O. REPAIR DAMAGED INSULATION FACINGS BY APPLYING SAME FACING MATERIAL OVER DAMAGED AREAS. EXTEND PATCHES AT LEAST 4 INCHES BEYOND DAMAGED AREAS. ADHERE, STAPLE, AND SEAL PATCHES SIMILAR TO BUTT JOINTS.
P. FOR ABOVE AMBIENT SERVICES, DO NOT INSTALL INSULATION TO THE FOLLOWING:
1. VIBRATION-CONTROL DEVICES.
2. TESTING AGENCY LABELS AND STAMPS.
3. NAMEPLATES AND DATA PLATES.
4. MANHOLES.
5. HANDHOLES.
6. CLEANOUTS.

3.3 PENETRATIONS
A. INSULATION INSTALLATION AT ROOF PENETRATIONS: INSTALL INSULATION CONTINUOUSLY THROUGH ROOF PENETRATIONS.
1. SEAL PENETRATIONS WITH FLASHING SEALANT.
2. FOR APPLICATIONS REQUIRING ONLY INDOOR INSULATION, TERMINATE INSULATION ABOVE ROOF SURFACE AND SEAL WITH JOINT SEALANT. FOR APPLICATIONS REQUIRING INDOOR AND OUTDOOR INSULATION, INSTALL INSULATION FOR OUTDOOR APPLICATIONS TIGHTLY JOINED TO INDOOR INSULATION ENDS. SEAL JOINT WITH JOINT SEALANT.
3. EXTEND JACKET OF OUTDOOR INSULATION OUTSIDE ROOF FLASHING AT LEAST 2 INCHES BELOW TOP OF ROOF FLASHING.
4. SEAL JACKET TO ROOF FLASHING WITH FLASHING SEALANT.
B. INSULATION INSTALLATION AT ABOVEGROUND EXTERIOR WALL PENETRATIONS: INSTALL INSULATION CONTINUOUSLY THROUGH WALL PENETRATIONS.
1. SEAL PENETRATIONS WITH FLASHING SEALANT.
2. FOR APPLICATIONS REQUIRING ONLY INDOOR INSULATION, TERMINATE INSULATION INSIDE WALL SURFACE AND SEAL WITH JOINT SEALANT. FOR APPLICATIONS REQUIRING INDOOR AND OUTDOOR INSULATION, INSTALL INSULATION FOR OUTDOOR APPLICATIONS TIGHTLY JOINED TO INDOOR INSULATION ENDS. SEAL JOINT WITH JOINT SEALANT.
3. EXTEND JACKET OF OUTDOOR INSULATION OUTSIDE WALL FLASHING AND OVERLAP WALL FLASHING AT LEAST 2 INCHES.
4. SEAL JACKET TO WALL FLASHING WITH FLASHING SEALANT.
C. INSULATION INSTALLATION AT INTERIOR WALL AND PARTITION PENETRATIONS (THAT ARE NOT FIRE RATED): INSTALL INSULATION CONTINUOUSLY THROUGH WALLS AND PARTITIONS.
D. INSULATION INSTALLATION AT FIRE-RATED WALL AND PARTITION PENETRATIONS: INSTALL INSULATION CONTINUOUSLY THROUGH PENETRATIONS OF FIRE-RATED WALLS AND PARTITIONS.
E. INSULATION INSTALLATION AT FLOOR PENETRATIONS:
1. PIPE: INSTALL INSULATION CONTINUOUSLY THROUGH FLOOR PENETRATIONS.
2. SEAL PENETRATIONS THROUGH FIRE-RATED ASSEMBLIES.

3.4 EQUIPMENT, TANK, AND VESSEL INSULATION INSTALLATION
A. MINERAL FIBER, PIPE AND TANK INSULATION INSTALLATION FOR TANKS AND VESSELS: SECURE INSULATION WITH ADHESIVE AND ANCHOR PINS AND SPEED WASHERS.
1. APPLY ADHESIVES ACCORDING TO MANUFACTURER'S RECOMMENDED COVERAGE RATES PER UNIT AREA, FOR 100 PERCENT COVERAGE OF TANK AND VESSEL SURFACES.
2. GROOVE AND SCORE INSULATION MATERIALS TO FIT AS CLOSELY AS POSSIBLE TO EQUIPMENT, INCLUDING CONTOURS. BEVEL INSULATION EDGES FOR CYLINDRICAL SURFACES FOR TIGHT JOINTS. STAGGER END JOINTS.
3. PROTECT EXPOSED CORNERS WITH SECURED CORNER ANGLES.
4. INSTALL ADHESIVELY ATTACHED OR SELF-STICKING INSULATION HANGERS AND SPEED WASHERS ON SIDES OF TANKS AND VESSELS AS FOLLOWS:
a. DO NOT WELD ANCHOR PINS TO ASME-LABELED PRESSURE VESSELS.
b. SELECT INSULATION HANGERS AND ADHESIVE THAT ARE COMPATIBLE WITH SERVICE TEMPERATURE AND WITH SUBSTRATE.
c. ON TANKS AND VESSELS, MAXIMUM ANCHOR-PIN SPACING IS 3 INCHES FROM INSULATION END JOINTS, AND 16 INCHES O.C. IN BOTH DIRECTIONS.
d. DO NOT OVERCOMPRESS INSULATION DURING INSTALLATION.
e. CUT AND MITER INSULATION SEGMENTS TO FIT CURVED SIDES AND DOMED HEADS OF TANKS AND VESSELS.
f. IMPALE INSULATION OVER ANCHOR PINS AND ATTACH SPEED WASHERS.
g. CUT EXCESS PORTION OF PINS EXTENDING BEYOND SPEED WASHERS OR BEND PARALLEL WITH INSULATION SURFACE. COVER EXPOSED PINS AND WASHERS WITH TAPE MATCHING INSULATION FACING.
5. SECURE EACH LAYER OF INSULATION WITH STAINLESS-STEEL OR ALUMINUM BANDS. SELECT BAND MATERIAL COMPATIBLE WITH INSULATION MATERIALS.
6. WHERE INSULATION HANGERS ON EQUIPMENT AND VESSELS ARE NOT PERMITTED OR PRACTICAL AND WHERE INSULATION SUPPORT RINGS ARE NOT PROVIDED, INSTALL A GIRDLE NETWORK FOR SECURING INSULATION. STRETCH PRESTRESSED AIRCRAFT CABLE AROUND THE DIAMETER OF VESSEL AND MAKE TAUT WITH CLAMPS, TURNBUCKLES, OR BREATHER SPRINGS. PLACE ONE CIRCUMFERENTIAL GIRDLE AROUND EQUIPMENT APPROXIMATELY 6 INCHES FROM EACH END. INSTALL WIRE OR CABLE BETWEEN TWO CIRCUMFERENTIAL GIRDLES 12 INCHES O.C. INSTALL A WIRE RING AROUND EACH END AND AROUND OUTER PERIPHERY OF CENTER OPENINGS, AND STRETCH PRESTRESSED AIRCRAFT CABLE RADIALLY FROM THE WIRE RING TO NEAREST CIRCUMFERENTIAL GIRDLE. INSTALL ADDITIONAL CIRCUMFERENTIAL GIRDLES ALONG THE BODY OF EQUIPMENT OR TANK AT A MINIMUM SPACING OF 48 INCHES O.C. USE THIS NETWORK FOR SECURING INSULATION WITH TIE WIRE OR BANDS.
7. STAGGER JOINTS BETWEEN INSULATION LAYERS AT LEAST 3 INCHES.
8. INSTALL INSULATION IN REMOVABLE SEGMENTS ON EQUIPMENT ACCESS DOORS, MANHOLES, HANDHOLES, AND OTHER ELEMENTS THAT REQUIRE FREQUENT REMOVAL FOR SERVICE AND INSPECTION.
9. BEVEL AND SEAL INSULATION ENDS AROUND MANHOLES, HANDHOLES, ASME STAMPS, AND NAMEPLATES.
10. FOR EQUIPMENT WITH SURFACE TEMPERATURES BELOW AMBIENT, APPLY MASTIC TO OPEN ENDS, JOINTS, SEAMS, BREAKS, AND PUNCTURES IN INSULATION.
B. FLEXIBLE ELASTOMERIC THERMAL INSULATION INSTALLATION FOR TANKS AND VESSELS: INSTALL INSULATION OVER ENTIRE SURFACE OF TANKS AND VESSELS.
1. APPLY 100 PERCENT COVERAGE OF ADHESIVE TO SURFACE WITH MANUFACTURER'S RECOMMENDED ADHESIVE.
2. SEAL LONGITUDINAL SEAMS AND END JOINTS.

3.5 GENERAL PIPE INSULATION INSTALLATION
A. REQUIREMENTS IN THIS ARTICLE GENERALLY APPLY TO ALL INSULATION MATERIALS EXCEPT WHERE MORE SPECIFIC REQUIREMENTS ARE SPECIFIED IN VARIOUS PIPE INSULATION MATERIAL INSTALLATION ARTICLES.
B. INSULATION INSTALLATION ON FITTINGS, VALVES, STRAINERS, FLANGES, AND UNIONS:
1. INSTALL INSULATION OVER FITTINGS, VALVES, STRAINERS, FLANGES, UNIONS, AND OTHER SPECIALTIES WITH CONTINUOUS THERMAL AND VAPOR-RETARDER INTEGRITY, UNLESS OTHERWISE INDICATED.
2. INSULATE PIPE ELBOWS USING PREFORMED FITTING INSULATION OR MITERED FITTINGS MADE FROM SAME MATERIAL AND DENSITY AS ADJACENT PIPE INSULATION. EACH PIECE SHALL BE BUTTED TIGHTLY AGAINST ADJOINING PIECE AND BONDED WITH ADHESIVE. FILL JOINTS, SEAMS, VOIDS, AND IRREGULAR SURFACES WITH INSULATING CEMENT FINISHED TO A SMOOTH, HARD, AND UNIFORM CONTOUR THAT IS UNIFORM WITH ADJOINING PIPE INSULATION.
3. INSULATE TEE FITTINGS WITH PREFORMED FITTING INSULATION OR SECTIONAL PIPE INSULATION OF SAME MATERIAL AND THICKNESS AS USED FOR ADJACENT PIPE. CUT SECTIONAL PIPE INSULATION TO FIT. BUTT EACH SECTION CLOSELY TO THE NEXT AND HOLD IN PLACE WITH TIE WIRE. BOND PIECES WITH ADHESIVE.
4. INSULATE VALVES USING PREFORMED FITTING INSULATION OR SECTIONAL PIPE INSULATION OF SAME MATERIAL, DENSITY, AND THICKNESS AS USED FOR ADJACENT PIPE. OVERLAP ADJOINING PIPE INSULATION BY NOT LESS THAN TWO TIMES THE THICKNESS OF PIPE INSULATION, OR ONE PIPE DIAMETER, WHICHEVER IS THICKER. FOR VALVES, INSULATE UP TO AND INCLUDING THE BONNETS, VALVE STUFFING-BOX STUDS, BOLTS, AND NUTS. FILL JOINTS, SEAMS, AND IRREGULAR SURFACES WITH INSULATING CEMENT.
5. INSULATE STRAINERS USING PREFORMED FITTING INSULATION OR SECTIONAL PIPE INSULATION OF SAME MATERIAL, DENSITY, AND THICKNESS AS USED FOR ADJACENT PIPE. OVERLAP ADJOINING PIPE INSULATION BY NOT LESS THAN TWO TIMES THE THICKNESS OF PIPE INSULATION, OR ONE PIPE DIAMETER, WHICHEVER IS THICKER. FILL JOINTS, SEAMS, AND IRREGULAR SURFACES WITH INSULATING CEMENT. INSULATE STRAINERS SO STRAINER BASKET FLANGE OR PLUG CAN BE EASILY REMOVED AND REPLACED WITHOUT DAMAGING THE INSULATION AND JACKET. PROVIDE A REMOVABLE REUSABLE INSULATION COVER. FOR BELOW AMBIENT SERVICES, PROVIDE A DESIGN THAT MAINTAINS VAPOR BARRIER.
6. INSULATE FLANGES AND UNIONS USING A SECTION OF OVERSIZED PREFORMED PIPE INSULATION. OVERLAP ADJOINING PIPE INSULATION BY NOT LESS THAN TWO TIMES THE THICKNESS OF PIPE INSULATION, OR ONE PIPE DIAMETER, WHICHEVER IS THICKER.
7. COVER SEGMENTED INSULATED SURFACES WITH A LAYER OF FINISHING CEMENT AND COAT WITH A MASTIC. INSTALL VAPOR BARRIER MASTIC FOR BELOW AMBIENT SERVICES AND A BREATHER MASTIC FOR ABOVE AMBIENT SERVICES. REINFORCE THE MASTIC WITH FABRIC-REINFORCING MESH. TROWEL THE MASTIC TO A SMOOTH AND WELL-SHAPED CONTOUR.

3.6 FLEXIBLE ELASTOMERIC INSULATION INSTALLATION
A. SEAL LONGITUDINAL SEAMS AND END JOINTS WITH MANUFACTURER'S RECOMMENDED ADHESIVE TO ELIMINATE OPENINGS IN INSULATION THAT ALLOW PASSAGE OF AIR TO SURFACE BEING INSULATED.
B. INSULATION INSTALLATION ON PIPE FLANGES:
1. INSTALL PIPE INSULATION TO OUTER DIAMETER OF PIPE FLANGE.
2. MAKE WIDTH OF INSULATION SECTION SAME AS OVERALL WIDTH OF FLANGE AND BOLTS, PLUS TWICE THE THICKNESS OF PIPE INSULATION.
3. FILL VOIDS BETWEEN INNER CIRCUMFERENCE OF FLANGE INSULATION AND OUTER CIRCUMFERENCE OF ADJACENT STRAIGHT PIPE SEGMENTS WITH CUT SECTIONS OF SHEET INSULATION OF SAME THICKNESS AS PIPE INSULATION.
4. SECURE INSULATION TO FLANGES AND SEAL SEAMS WITH MANUFACTURER'S RECOMMENDED ADHESIVE TO ELIMINATE OPENINGS IN INSULATION THAT ALLOW PASSAGE OF AIR TO SURFACE BEING INSULATED.
C. INSULATION INSTALLATION ON PIPE FITTINGS AND ELBOWS:
1. INSTALL MITERED SECTIONS OF PIPE INSULATION.
D. SECURE INSULATION MATERIALS AND SEAL SEAMS WITH MANUFACTURER'S RECOMMENDED ADHESIVE TO ELIMINATE OPENINGS IN INSULATION THAT ALLOW PASSAGE OF AIR TO SURFACE BEING INSULATED.INSULATION INSTALLATION ON VALVES AND PIPE SPECIALTIES:
1. INSTALL PREFORMED VALVE COVERS MANUFACTURED OF SAME MATERIAL AS PIPE INSULATION WHEN AVAILABLE.
2. WHEN PREFORMED VALVE COVERS ARE NOT AVAILABLE, INSTALL CUT SECTIONS OF PIPE AND SHEET INSULATION TO VALVE BODY. ARRANGE INSULATION TO PERMIT ACCESS TO PACKING AND TO ALLOW VALVE OPERATION WITHOUT DISTURBING INSULATION.
3. INSTALL INSULATION TO FLANGES AS SPECIFIED FOR FLANGE INSULATION APPLICATION.
4. SECURE INSULATION TO VALVES AND SPECIALTIES AND SEAL SEAMS WITH MANUFACTURER'S RECOMMENDED ADHESIVE TO ELIMINATE OPENINGS IN INSULATION THAT ALLOW PASSAGE OF AIR TO SURFACE BEING INSULATED.
E. INSULATION INSTALLATION ON PIPE FITTINGS AND ELBOWS:
1. INSTALL MITERED SECTIONS OF PIPE INSULATION.
F. SECURE INSULATION MATERIALS AND SEAL SEAMS WITH MANUFACTURER'S RECOMMENDED ADHESIVE TO ELIMINATE OPENINGS IN INSULATION THAT ALLOW PASSAGE OF AIR TO SURFACE BEING INSULATED.INSULATION INSTALLATION ON VALVES AND PIPE SPECIALTIES:
1. INSTALL PREFORMED VALVE COVERS MANUFACTURED OF SAME MATERIAL AS PIPE INSULATION WHEN AVAILABLE.
2. WHEN PREFORMED VALVE COVERS ARE NOT AVAILABLE, INSTALL CUT SECTIONS OF PIPE AND SHEET INSULATION TO VALVE BODY. ARRANGE INSULATION TO PERMIT ACCESS TO PACKING AND TO ALLOW VALVE OPERATION WITHOUT DISTURBING INSULATION.
3. INSTALL INSULATION TO FLANGES AS SPECIFIED FOR FLANGE INSULATION APPLICATION.
4. SECURE INSULATION TO VALVES AND SPECIALTIES AND SEAL SEAMS WITH MANUFACTURER'S RECOMMENDED ADHESIVE TO ELIMINATE OPENINGS IN INSULATION THAT ALLOW PASSAGE OF AIR TO SURFACE BEING INSULATED.

3.7 MINERAL-FIBER INSULATION INSTALLATION
A. INSULATION INSTALLATION ON STRAIGHT PIPES AND TUBES:
1. SECURE EACH LAYER OF PREFORMED PIPE INSULATION TO PIPE WITH WIRE OR BANDS AND TIGHTEN BANDS WITHOUT DEFORMING INSULATION MATERIALS.
2. WHERE VAPOR BARRIERS ARE INDICATED, SEAL LONGITUDINAL SEAMS, END JOINTS, AND PROTRUSIONS WITH VAPOR-BARRIER MASTIC AND JOINT SEALANT.
3. FOR INSULATION WITH FACTORY-APPLIED JACKETS ON ABOVE AMBIENT SURFACES, SECURE LAPS WITH OUTWARD CLINCHED STAPLES AT 6 INCHES O.C.
4. FOR INSULATION WITH FACTORY-APPLIED JACKETS ON BELOW AMBIENT SURFACES, DO NOT STAPLE LONGITUDINAL TABS BUT SECURE TABS WITH ADDITIONAL ADHESIVE AS RECOMMENDED BY INSULATION MATERIAL MANUFACTURER AND SEAL WITH VAPOR BARRIER MASTIC AND FLASHING SEALANT.
B. INSULATION INSTALLATION ON PIPE FLANGES:
1. INSTALL PREFORMED PIPE INSULATION TO OUTER DIAMETER OF PIPE FLANGE.
2. MAKE WIDTH OF INSULATION SECTION SAME AS OVERALL WIDTH OF FLANGE AND BOLTS, PLUS TWICE THE THICKNESS OF PIPE INSULATION.
3. FILL VOIDS BETWEEN INNER CIRCUMFERENCE OF FLANGE INSULATION AND OUTER CIRCUMFERENCE OF ADJACENT STRAIGHT PIPE SEGMENTS WITH MINERAL-FIBER BLANKET INSULATION.
4. INSTALL JACKET MATERIAL WITH MANUFACTURER'S RECOMMENDED ADHESIVE, OVERLAP SEAMS AT LEAST 1 INCH, AND SEAL JOINTS WITH FLASHING SEALANT.
C. INSULATION INSTALLATION ON PIPE FITTINGS AND ELBOWS:
1. INSTALL PREFORMED SECTIONS OF SAME MATERIAL AS STRAIGHT SEGMENTS OF PIPE INSULATION WHEN AVAILABLE.
2. WHEN PREFORMED INSULATION ELBOWS AND FITTINGS ARE NOT AVAILABLE, INSTALL MITERED SECTIONS OF PIPE INSULATION, TO A THICKNESS EQUAL TO ADJOINING PIPE INSULATION. SECURE INSULATION MATERIALS WITH WIRE OR BANDS.
D. INSULATION INSTALLATION ON VALVES AND PIPE SPECIALTIES:
1. INSTALL PREFORMED SECTIONS OF SAME MATERIAL AS STRAIGHT SEGMENTS OF PIPE INSULATION WHEN AVAILABLE.
2. WHEN PREFORMED SECTIONS ARE NOT AVAILABLE, INSTALL MITERED SECTIONS OF PIPE INSULATION TO VALVE BODY.
3. ARRANGE INSULATION TO PERMIT ACCESS TO PACKING AND TO ALLOW VALVE OPERATION WITHOUT DISTURBING INSULATION.
4. INSTALL INSULATION TO FLANGES AS SPECIFIED FOR FLANGE INSULATION APPLICATION.

3.9 FIELD-APPLIED JACKET INSTALLATION
A. WHERE PVC JACKETS ARE INDICATED, INSTALL WITH 1-INCH OVERLAP AT LONGITUDINAL SEAMS AND END JOINTS; FOR HORIZONTAL APPLICATIONS, INSTALL WITH LONGITUDINAL SEAMS ALONG TOP AND BOTTOM OF TANKS AND VESSELS. SEAL WITH MANUFACTURER'S RECOMMENDED ADHESIVE.
1. APPLY TWO CONTINUOUS BEADS OF ADHESIVE TO SEAMS AND JOINTS, ONE BEAD UNDER LAP AND THE FINISH BEAD ALONG SEAM AND JOINT EDGE.
B. WHERE METAL JACKETS ARE INDICATED, INSTALL WITH 2-INCH OVERLAP AT LONGITUDINAL SEAMS AND END JOINTS. OVERLAP LONGITUDINAL SEAMS ARRANGED TO SHED WATER. SEAL END JOINTS WITH WEATHERPROOF SEALANT RECOMMENDED BY INSULATION MANUFACTURER. SECURE JACKET WITH STAINLESS-STEEL BANDS 12 INCHES O.C. AND AT END JOINTS.

3.10 PIPING INSULATION SCHEDULE, GENERAL
A. FOLLOW SCHEDULES ILLUSTRATED ON THE DRAWINGS FOR THICKNESS, MATERIAL AND FINISH NEEDS.
B. ITEMS NOT INSULATED: UNLESS OTHERWISE INDICATED, DO NOT INSTALL INSULATION ON THE FOLLOWING:
1. DRAINAGE PIPING LOCATED IN CRAWL SPACES.
2. UNDERGROUND PIPING.
3. CHROME-PLATED PIPES AND FITTINGS UNLESS THERE IS A POTENTIAL FOR PERSONNEL INJURY.

SECTION 221116 - DOMESTIC WATER PIPING
PART 1 - GENERAL

1.1 SUMMARY
A. SECTION INCLUDES:
1. UNDER-BUILDING SLAB AND ABOVEGROUND DOMESTIC WATER PIPES, TUBES, FITTINGS, AND SPECIALTIES INSIDE THE BUILDING.
2. TRANSITION FITTINGS.
3. FLEXIBLE CONNECTORS.

1.2 SUBMITTALS
A. PRODUCT DATA: FOR THE FOLLOWING:
1. PIPIE, FITTING, AND COUPLINGS.
2. SPECIALTY VALVES
B. WATER SAMPLES: SPECIFIED IN "CLEANING" ARTICLE.
C. FIELD QUALITY-CONTROL REPORTS.

1.3 QUALITY ASSURANCE
A. PIPING MATERIALS SHALL BEAR LABEL, STAMP, OR OTHER MARKINGS OF SPECIFIED TESTING AGENCY.
B. COMPLY WITH NSF 61 FOR POTABLE DOMESTIC WATER PIPING AND COMPONENTS.

PART 2 - PRODUCTS

2.1 PIPING MATERIALS
A. COMPLY WITH REQUIREMENTS IN "PIPING SCHEDULE" ARTICLE FOR APPLICATIONS OF PIPE, TUBE, FITTING MATERIALS, AND JOINING METHODS FOR SPECIFIC SERVICES, SERVICE LOCATIONS, AND PIPE SIZES.

2.2 COPPER TUBE AND FITTINGS
A. HARD COPPER TUB

3.3 FLEXIBLE CONNECTOR INSTALLATION
A. INSTALL FLEXIBLE CONNECTORS IN SUCTION AND DISCHARGE PIPING CONNECTIONS TO EACH DOMESTIC WATER PUMP.
B. INSTALL STAINLESS-STEEL-HOSE FLEXIBLE CONNECTORS IN STEEL DOMESTIC WATER PIPING.

3.4 CONNECTIONS
A. DRAWINGS INDICATE GENERAL ARRANGEMENT OF PIPING, FITTINGS, AND SPECIALTIES.
B. INSTALL PIPING ADJACENT TO EQUIPMENT AND MACHINES TO ALLOW SERVICE AND MAINTENANCE.
C. CONNECT DOMESTIC WATER PIPING TO EXTERIOR WATER-SERVICE PIPING. USE TRANSITION FITTING TO JOIN DISSIMILAR PIPING MATERIALS.
D. CONNECT DOMESTIC WATER PIPING TO WATER-SERVICE PIPING WITH SHUTOFF VALVE; EXTEND AND CONNECT TO THE FOLLOWING:
1. DOMESTIC WATER BOOSTER PUMPS: COLD-WATER SUCTION AND DISCHARGE PIPING.
2. WATER HEATERS: COLD-WATER INLET AND HOT-WATER OUTLET PIPING IN SIZES INDICATED, BUT NOT SMALLER THAN SIZES OF WATER HEATER CONNECTIONS.
3. PLUMBING FIXTURES: COLD- AND HOT-WATER SUPPLY PIPING IN SIZES INDICATED, BUT NOT SMALLER THAN REQUIRED BY PLUMBING CODE. COMPLY WITH REQUIREMENTS IN DIVISION 22 PLUMBING FIXTURE SECTIONS FOR CONNECTION SIZES.
4. EQUIPMENT: COLD- AND HOT-WATER SUPPLY PIPING AS INDICATED, BUT NOT SMALLER THAN EQUIPMENT CONNECTIONS. PROVIDE SHUTOFF VALVE AND UNION FOR EACH CONNECTION. USE FLANGES INSTEAD OF UNIONS FOR NPS 2-1/2 AND LARGER.

3.5 FIELD QUALITY CONTROL
A. PERFORM TESTS AND INSPECTIONS.
B. PIPING INSPECTIONS:
1. DO NOT ENCLOSE, COVER, OR PUT PIPING INTO OPERATION UNTIL IT HAS BEEN INSPECTED AND APPROVED BY AUTHORITIES HAVING JURISDICTION.
2. DURING INSTALLATION, NOTIFY AUTHORITIES HAVING JURISDICTION AT LEAST ONE DAY BEFORE INSPECTION MUST BE MADE. PERFORM TESTS SPECIFIED BELOW IN PRESENCE OF AUTHORITIES HAVING JURISDICTION:
a. ROUGHING-IN INSPECTION: ARRANGE FOR INSPECTION OF PIPING BEFORE CONCEALING OR CLOSING-IN AFTER ROUGHING-IN AND BEFORE SETTING FIXTURES.
b. FINAL INSPECTION: ARRANGE FINAL INSPECTION FOR AUTHORITIES HAVING JURISDICTION TO OBSERVE TESTS SPECIFIED BELOW AND TO ENSURE COMPLIANCE WITH REQUIREMENTS.
3. REINSPECTION: IF AUTHORITIES HAVING JURISDICTION FIND THAT PIPING WILL NOT PASS TESTS OR INSPECTIONS, MAKE REQUIRED CORRECTIONS AND ARRANGE FOR REINSPECTION.
4. REPORTS: PREPARE INSPECTION REPORTS AND HAVE THEM SIGNED BY AUTHORITIES HAVING JURISDICTION.
C. PIPING TESTS:
1. FILL DOMESTIC WATER PIPING. CHECK COMPONENTS TO DETERMINE THAT THEY ARE NOT AIR BOUND AND THAT PIPING IS FULL OF WATER.
2. TEST FOR LEAKS AND DEFECTS IN NEW PIPING AND PARTS OF EXISTING PIPING THAT HAVE BEEN ALTERED, EXTENDED, OR REPAIRED. IF TESTING IS PERFORMED IN SEGMENTS, SUBMIT A SEPARATE REPORT FOR EACH TEST, COMPLETE WITH DIAGRAM OF PORTION OF PIPING TESTED.
3. LEAVE NEW, ALTERED, EXTENDED, OR REPLACED DOMESTIC WATER PIPING UNCOVERED AND UNCONCEALED UNTIL IT HAS BEEN TESTED AND APPROVED. EXPOSE WORK THAT WAS COVERED OR CONCEALED BEFORE IT WAS TESTED.
4. CAP AND SUBJECT PIPING TO STATIC WATER PRESSURE OF 50 PSIG ABOVE OPERATING PRESSURE, WITHOUT EXCEEDING PRESSURE RATING OF PIPING SYSTEM MATERIALS. ISOLATE TEST SOURCE AND ALLOW TO STAND FOR FOUR HOURS. LEAKS AND LOSS IN TEST PRESSURE CONSTITUTE DEFECTS THAT MUST BE REPAIRED.
5. REPAIR LEAKS AND DEFECTS WITH NEW MATERIALS AND RETEST PIPING OR PORTION THEREOF UNTIL SATISFACTORY RESULTS ARE OBTAINED.
6. PREPARE REPORTS FOR TESTS AND FOR CORRECTIVE ACTION REQUIRED.
D. DOMESTIC WATER PIPING WILL BE CONSIDERED DEFECTIVE IF IT DOES NOT PASS TESTS AND INSPECTIONS.
E. PREPARE TEST AND INSPECTION REPORTS.

3.6 ADJUSTING
A. PERFORM THE FOLLOWING ADJUSTMENTS BEFORE OPERATION:
1. CLOSE DRAIN VALVES, HYDRANTS, AND HOSE BIBBS.
2. OPEN SHUTOFF VALVES TO FULLY OPEN POSITION.
3. OPEN THROTTLING VALVES TO PROPER SETTING.
4. ADJUST BALANCING VALVES IN HOT-WATER-CIRCULATION RETURN PIPING TO PROVIDE ADEQUATE FLOW.
a. MANUALLY ADJUST BALL-TYPE BALANCING VALVES IN HOT-WATER-CIRCULATION RETURN PIPING TO PROVIDE FLOW OF HOT WATER IN EACH BRANCH.
b. ADJUST CALIBRATED BALANCING VALVES TO FLOWS INDICATED.
5. REMOVE PLUGS USED DURING TESTING OF PIPING AND FOR TEMPORARY SEALING OF PIPING DURING INSTALLATION.
6. REMOVE AND CLEAN STRAINER SCREENS. CLOSE DRAIN VALVES AND REPLACE DRAIN PLUGS.
7. REMOVE FILTER CARTRIDGES FROM HOUSINGS AND VERIFY THAT CARTRIDGES ARE AS SPECIFIED FOR APPLICATION WHERE USED AND ARE CLEAN AND READY FOR USE.
8. CHECK PLUMBING SPECIALTIES AND VERIFY PROPER SETTINGS, ADJUSTMENTS, AND OPERATION.

3.7 CLEANING
A. PURGE NEW PIPING AND PARTS OF EXISTING PIPING THAT HAVE BEEN ALTERED, EXTENDED, OR REPAIRED BEFORE USING.
B. USE PURGING AND DISINFECTING PROCEDURES PRESCRIBED BY AUTHORITIES HAVING JURISDICTION; IF METHODS ARE NOT PRESCRIBED, USE PROCEDURES DESCRIBED IN EITHER AWWA C651 OR AWWA C652 OR FOLLOW PROCEDURES DESCRIBED BELOW:
1. FLUSH PIPING SYSTEM WITH CLEAN, POTABLE WATER UNTIL DIRTY WATER DOES NOT APPEAR AT OUTLETS.
2. FILL AND ISOLATE SYSTEM ACCORDING TO EITHER OF THE FOLLOWING:
a. FILL SYSTEM OR PART THEREOF WITH WATER/CHLORINE SOLUTION WITH AT LEAST 50 PPM OF CHLORINE. ISOLATE WITH VALVES AND ALLOW TO STAND FOR 24 HOURS.
b. FILL SYSTEM OR PART THEREOF WITH WATER/CHLORINE SOLUTION WITH AT LEAST 200 PPM OF CHLORINE. ISOLATE AND ALLOW TO STAND FOR THREE HOURS.
3. FLUSH SYSTEM WITH CLEAN, POTABLE WATER UNTIL NO CHLORINE IS IN WATER COMING FROM SYSTEM AFTER THE STANDING TIME.
a. SUBMIT WATER SAMPLES IN STERILE BOTTLES TO AUTHORITIES HAVING JURISDICTION. REPEAT PROCEDURES IF BIOLOGICAL EXAMINATION SHOWS CONTAMINATION.

SECTION 221316 - SANITARY WASTE AND VENT PIPING

PART 1 - GENERAL

1.1 SUMMARY
A. THIS SECTION INCLUDES THE FOLLOWING FOR SOIL, WASTE, AND VENT PIPING INSIDE THE BUILDING:
1. PIPE, TUBE, AND FITTINGS.
2. SPECIAL PIPE FITTINGS.

1.2 PERFORMANCE REQUIREMENTS
A. COMPONENTS AND INSTALLATION SHALL BE CAPABLE OF WITHSTANDING THE FOLLOWING MINIMUM WORKING PRESSURE, UNLESS OTHERWISE INDICATED:
1. SOIL, WASTE, AND VENT PIPING: 10-FOOT HEAD OF WATER.

1.3 SUBMITTALS
A. PRODUCT DATA: FOR PIPE, TUBE, FITTINGS, AND COUPLINGS.
B. FIELD QUALITY-CONTROL INSPECTION AND TEST REPORTS.

1.4 QUALITY ASSURANCE
A. PIPING MATERIALS SHALL BEAR LABEL, STAMP, OR OTHER MARKINGS OF SPECIFIED TESTING AGENCY.
B. COMPLY WITH NSF 14, "PLASTICS PIPING SYSTEMS COMPONENTS AND RELATED MATERIALS." FOR PLASTIC PIPING COMPONENTS. INCLUDE MARKING WITH "NSF-DWV" FOR PLASTIC DRAIN, WASTE, AND VENT PIPING; "NSF-DRAIN" FOR PLASTIC DRAIN PIPING; "NSF-TUBULAR" FOR PLASTIC CONTINUOUS WASTE PIPING; AND "NSF-SEWER" FOR PLASTIC SEWER PIPING.
C. VOC CONTENT: ADHESIVES AND PRIMERS SHALL MEET THE APPLICABLE CHEMICAL CONTENT REQUIREMENTS OF SCAQMD RULE 1168
1. GREENGAURD GOLD CERTIFIED PRODUCTS ARE ACCEPTABLE.

PART 2 - PRODUCTS

2.1 PIPING MATERIALS
A. REFER TO PIPING APPLICATION CHART FOR APPLICATIONS OF PIPE, TUBE, FITTING, AND JOINING MATERIALS.

2.2 HUBLESS CAST-IRON SOIL PIPE AND FITTINGS
A. PIPE AND FITTINGS: ASTM A 888 OR CISPI 301.
B. SOVENT STACK FITTINGS: ASME B16.45 OR ASSE 1043, HUBLESS, CAST-IRON AERATOR AND DEAERATOR DRAINAGE FITTINGS.
C. SHIELDED COUPLINGS: ASTM C 1277 ASSEMBLY OF METAL SHIELD OR HOUSING, CORROSION-RESISTANT FASTENERS, AND RUBBER SLEEVE WITH INTEGRAL, CENTER PIPE STOP.
1. STANDARD, SHIELDED, STAINLESS-STEEL COUPLINGS: CISPI 310, WITH STAINLESS-STEEL CORRUGATED SHIELD; STAINLESS-STEEL BANDS AND TIGHTENING DEVICES; AND ASTM C 564, RUBBER SLEEVE.
2. HEAVY-DUTY, SHIELDED, STAINLESS-STEEL COUPLINGS: WITH STAINLESS-STEEL SHIELD, STAINLESS-STEEL BANDS AND TIGHTENING DEVICES, AND ASTM C 564, RUBBER SLEEVE.
3. HEAVY-DUTY, SHIELDED, CAST-IRON COUPLINGS: ASTM A 48/A 48M, TWO-PIECE, CAST-IRON HOUSING; STAINLESS-STEEL BOLTS AND NUTS; AND ASTM C 564, RUBBER SLEEVE.

2.3 PVC PIPE AND FITTINGS
A. SOLID-WALL PVC PIPE: ASTM D 2665, DRAIN, WASTE, AND VENT.
1. PVC SOCKET FITTINGS: ASTM D 2665, SOCKET TYPE, MADE TO ASTM D 3311, DRAIN, WASTE, AND VENT PATTERNS.
B. SOLVENT CEMENT AND ADHESIVE PRIMER:
1. USE PVC SOLVENT CEMENT THAT HAS A VOC CONTENT OF 510 G/L OR LESS WHEN CALCULATED ACCORDING TO 40 CFR 59, SUBPART D (EPA METHOD 24).
2. USE ADHESIVE PRIMER THAT HAS A VOC CONTENT OF 550 G/L OR LESS WHEN CALCULATED ACCORDING TO 40 CFR 59, SUBPART D (EPA METHOD 24).

2.4 SPECIAL PIPE FITTINGS
A. FLEXIBLE, NONPRESSURE PIPE COUPLINGS: COMPLY WITH ASTM C 1173, ELASTOMERIC, SLEEVE-TYPE, REDUCING OR TRANSITION PATTERN. INCLUDE SHEAR RING, ENDS OF SAME SIZES AS PIPING TO BE JOINED, AND CORROSION-RESISTANT-METAL TENSION BAND AND TIGHTENING MECHANISM ON EACH END.
1. SLEEVE MATERIALS:
a. FOR CAST-IRON SOIL PIPES: ASTM C 564, RUBBER.
b. FOR PLASTIC PIPES: ASTM F 477, ELASTOMERIC SEAL OR ASTM D 5926, PVC.
c. FOR DISSIMILAR PIPES: ASTM D 5926, PVC OR OTHER MATERIAL COMPATIBLE WITH PIPE MATERIALS BEING JOINED.
B. SHIELDED NONPRESSURE PIPE COUPLINGS: ASTM C 1460, ELASTOMERIC OR RUBBER SLEEVE WITH FULL-LENGTH, CORROSION-RESISTANT OUTER SHIELD AND CORROSION-RESISTANT-METAL TENSION BAND AND TIGHTENING MECHANISM ON EACH END.
C. PRESSURE PIPE COUPLINGS: AWWA C219 METAL, SLEEVE-TYPE SAME SIZE AS, WITH PRESSURE RATING AT LEAST EQUAL TO, AND ENDS COMPATIBLE WITH, PIPES TO BE JOINED.
1. CENTER-SLEEVE MATERIAL: MANUFACTURER'S STANDARD.
2. GASKET MATERIAL: NATURAL OR SYNTHETIC RUBBER.
3. METAL COMPONENT FINISH: CORROSION-RESISTANT COATING OR MATERIAL.

PART 3 - EXECUTION

3.1 PIPING INSTALLATION
A. BASIC PIPING INSTALLATION REQUIREMENTS ARE SPECIFIED IN DIVISION 22 SECTION "COMMON WORK RESULTS FOR PLUMBING."
B. INSTALL CLEANOUTS AT GRADE AND EXTEND TO WHERE BUILDING SANITARY DRAINS CONNECT TO BUILDING SANITARY SEWERS.
C. INSTALL CLEANOUT FITTING WITH CLOSURE PLUG INSIDE THE BUILDING IN SANITARY FORCE-MAIN PIPING.
D. INSTALL CAST-IRON SLEEVE WITH WATER STOP AND MECHANICAL SLEEVE SEAL AT EACH SERVICE PIPE PENETRATION THROUGH FOUNDATION WALL. SELECT NUMBER OF INTERLOCKING RUBBER LINKS REQUIRED TO MAKE INSTALLATION WATERTIGHT.
E. INSTALL WALL-PENETRATION FITTING AT EACH SERVICE PIPE PENETRATION THROUGH FOUNDATION WALL. MAKE INSTALLATION WATERTIGHT.
F. INSTALL CAST-IRON SOIL PIPING ACCORDING TO CISPI'S "CAST IRON SOIL PIPE AND FITTINGS HANDBOOK," CHAPTER IV, "INSTALLATION OF CAST IRON SOIL PIPE AND FITTINGS."
1. INSTALL ENCASEMENT ON UNDERGROUND PIPING ACCORDING TO ASTM A 674 OR AWWA C105.
G. MAKE CHANGES IN DIRECTION FOR SOIL AND WASTE DRAINAGE AND VENT PIPING USING APPROPRIATE BRANCHES, BENDS, AND LONG-SWEEP BENDS. SANITARY TEES AND SHORT-SWEEP 1/4 BENDS MAY BE USED ON VERTICAL STACKS IF CHANGE IN DIRECTION OF FLOW IS FROM HORIZONTAL TO VERTICAL. USE LONG-TURN, DOUBLE Y-BRANCH AND 1/8-BEND FITTINGS IF 2 FIXTURES ARE INSTALLED BACK TO BACK OR SIDE BY SIDE WITH COMMON DRAIN PIPE. STRAIGHT TEES, ELBOWS, AND CROSSES MAY BE USED ON VENT LINES. DO NOT CHANGE DIRECTION OF FLOW MORE THAN 90 DEGREES. USE PROPER SIZE OF STANDARD INCREASERS AND REDUCERS IF PIPES OF DIFFERENT SIZES ARE CONNECTED. REDUCING SIZE OF DRAINAGE PIPING IN DIRECTION OF FLOW IS PROHIBITED.
H. LAY BURIED BUILDING DRAINAGE PIPING BEGINNING AT LOW POINT OF EACH SYSTEM. INSTALL TRUE TO GRADES AND ALIGNMENT INDICATED, WITH UNBROKEN CONTINUITY OF INVERT. PLACE HUB ENDS OF PIPING UPSTREAM. INSTALL REQUIRED GASKETS ACCORDING TO MANUFACTURER'S WRITTEN INSTRUCTIONS FOR USE OF LUBRICANTS, CEMENTS, AND OTHER INSTALLATION REQUIREMENTS. MAINTAIN SWAB IN PIPING AND PULL PAST EACH JOINT AS COMPLETED.
I. INSTALL SOIL AND WASTE DRAINAGE AND VENT PIPING AT THE FOLLOWING MINIMUM SLOPES, UNLESS OTHERWISE INDICATED:
1. HORIZONTAL SANITARY DRAINAGE PIPING: 2 PERCENT DOWNWARD IN DIRECTION OF FLOW FOR PIPING NPS 3 AND SMALLER; 1 PERCENT DOWNWARD IN DIRECTION OF FLOW FOR PIPING NPS 4 AND LARGER.
2. VENT PIPING: 1 PERCENT DOWN TOWARD VERTICAL FIXTURE VENT OR TOWARD VENT STACK.
J. SLEEVES ARE NOT REQUIRED FOR CAST-IRON SOIL PIPING PASSING THROUGH CONCRETE SLABS-ON-GRADE IF SLAB IS WITHOUT MEMBRANE WATERPROOFING.
K. INSTALL PVC SOIL AND WASTE DRAINAGE AND VENT PIPING ACCORDING TO ASTM D 2665.
L. INSTALL UNDERGROUND PVC SOIL AND WASTE DRAINAGE PIPING ACCORDING TO ASTM D 2321.
M. DO NOT ENCLOSE, COVER, OR PUT PIPING INTO OPERATION UNTIL IT IS INSPECTED AND APPROVED BY AUTHORITIES HAVING JURISDICTION.

3.2 JOINT CONSTRUCTION
A. BASIC PIPING JOINT CONSTRUCTION REQUIREMENTS ARE SPECIFIED IN DIVISION 22 SECTION "COMMON WORK RESULTS FOR PLUMBING."
B. JOIN HUBLESS CAST-IRON SOIL PIPING ACCORDING TO CISPI 310 AND CISPI'S "CAST IRON SOIL PIPE AND FITTINGS HANDBOOK" FOR HUBLESS-COUPLING JOINTS.
C. PVC NONPRESSURE PIPING JOINTS: JOIN PIPING ACCORDING TO ASTM D 2665.

3.3 CONNECTIONS
A. DRAWINGS INDICATE GENERAL ARRANGEMENT OF PIPING, FITTINGS, AND SPECIALTIES.
B. CONNECT SOIL AND WASTE PIPING TO EXTERIOR SANITARY SEWERAGE PIPING. USE TRANSITION FITTING TO JOIN DISSIMILAR PIPING MATERIALS.
C. CONNECT DRAINAGE AND VENT PIPING TO THE FOLLOWING:
1. PLUMBING FIXTURES: CONNECT DRAINAGE PIPING IN SIZES INDICATED, BUT NOT SMALLER THAN REQUIRED BY PLUMBING CODE.
2. PLUMBING FIXTURES AND EQUIPMENT: CONNECT ATMOSPHERIC VENT PIPING IN SIZES INDICATED, BUT NOT SMALLER THAN REQUIRED BY AUTHORITIES HAVING JURISDICTION.
3. PLUMBING SPECIALTIES: CONNECT DRAINAGE AND VENT PIPING IN SIZES INDICATED, BUT NOT SMALLER THAN REQUIRED BY PLUMBING CODE.
4. EQUIPMENT: CONNECT DRAINAGE PIPING AS INDICATED. PROVIDE SHUTOFF VALVE, IF INDICATED, AND UNION FOR EACH CONNECTION. USE FLANGES INSTEAD OF UNIONS FOR CONNECTIONS NPS 2-1/2 AND LARGER.

3.4 FIELD QUALITY CONTROL
A. DURING INSTALLATION, NOTIFY AUTHORITIES HAVING JURISDICTION AT LEAST 24 HOURS BEFORE INSPECTION MUST BE MADE. PERFORM TESTS SPECIFIED BELOW IN PRESENCE OF AUTHORITIES HAVING JURISDICTION.
1. ROUGHING-IN INSPECTION: ARRANGE FOR INSPECTION OF PIPING BEFORE CONCEALING OR CLOSING-IN AFTER ROUGHING-IN AND BEFORE SETTING FIXTURES.
2. FINAL INSPECTION: ARRANGE FOR FINAL INSPECTION BY AUTHORITIES HAVING JURISDICTION TO OBSERVE TESTS SPECIFIED BELOW AND TO ENSURE COMPLIANCE WITH REQUIREMENTS.
B. REINSPECTION: IF AUTHORITIES HAVING JURISDICTION FIND THAT PIPING WILL NOT PASS TEST OR INSPECTION, MAKE REQUIRED CORRECTIONS AND ARRANGE FOR REINSPECTION.
C. REPORTS: PREPARE INSPECTION REPORTS AND HAVE THEM SIGNED BY AUTHORITIES HAVING JURISDICTION.
D. TEST SANITARY DRAINAGE AND VENT PIPING ACCORDING TO PROCEDURES OF AUTHORITIES HAVING JURISDICTION OR, IN ABSENCE OF PUBLISHED PROCEDURES, AS FOLLOWS:
1. TEST FOR LEAKS AND DEFECTS IN NEW PIPING AND PARTS OF EXISTING PIPING THAT HAVE BEEN ALTERED, EXTENDED, OR REPAIRED. IF TESTING IS PERFORMED IN SEGMENTS, SUBMIT SEPARATE REPORT FOR EACH TEST, COMPLETE WITH DIAGRAM OF PORTION OF PIPING TESTED.
2. LEAVE UNCOVERED AND UNCONCEALED NEW, ALTERED, EXTENDED, OR REPLACED DRAINAGE AND VENT PIPING UNTIL IT HAS BEEN TESTED AND APPROVED. EXPOSE WORK THAT WAS COVERED OR CONCEALED BEFORE IT WAS TESTED.
3. ROUGHING-IN PLUMBING TEST PROCEDURE: TEST DRAINAGE AND VENT PIPING, EXCEPT OUTSIDE LEADERS, ON COMPLETION OF ROUGHING-IN. CLOSE OPENINGS IN PIPING SYSTEM AND FILL WITH WATER TO POINT OF OVERFLOW, BUT NOT LESS THAN 10-FOOT HEAD OF WATER. FROM 15 MINUTES BEFORE INSPECTION STARTS TO COMPLETION OF INSPECTION, WATER LEVEL MUST NOT DROP. INSPECT JOINTS FOR LEAKS.
4. FINISHED PLUMBING TEST PROCEDURE: AFTER PLUMBING FIXTURES HAVE BEEN SET AND TRAPS FILLED WITH WATER, TEST CONNECTIONS AND PROVE THEY ARE GASTIGHT AND WATERTIGHT. PLUG VENT-STACK OPENINGS ON ROOF AND BUILDING DRAINS WHERE THEY LEAVE BUILDING. INTRODUCE AIR INTO PIPING SYSTEM EQUAL TO PRESSURE OF 1-INCH WG. USE U-TUBE OR MANOMETER INSERTED IN TRAP OF WATER CLOSET TO MEASURE THIS PRESSURE. AIR PRESSURE MUST REMAIN CONSTANT WITHOUT INTRODUCING ADDITIONAL AIR THROUGHOUT PERIOD OF INSPECTION. INSPECT PLUMBING FIXTURE CONNECTIONS FOR GAS AND WATER LEAKS.
5. REPAIR LEAKS AND DEFECTS WITH NEW MATERIALS AND RETEST PIPING, OR PORTION THEREOF, UNTIL SATISFACTORY RESULTS ARE OBTAINED.
6. PREPARE REPORTS FOR TESTS AND REQUIRED CORRECTIVE ACTION.

3.5 CLEANING
A. CLEAN INTERIOR OF PIPING. REMOVE DIRT AND DEBRIS AS WORK PROGRESSES.
B. PROTECT DRAINS DURING REMAINDER OF CONSTRUCTION PERIOD TO AVOID CLOGGING WITH DIRT AND DEBRIS AND TO PREVENT DAMAGE FROM TRAFFIC AND CONSTRUCTION WORK.
C. PLACE PLUGS IN ENDS OF UNCOMPLETED PIPING AT END OF DAY AND WHEN WORK STOPS.

3.6 PROTECTION
A. EXPOSED ABS AND PVC PIPING: PROTECT PLUMBING VENTS EXPOSED TO SUNLIGHT WITH TWO COATS OF WATER-BASED LATEX PAINT.

SECTION 221626 - FACILITY LIQUEFIED-PETROLEUM GAS PIPING - ADD ALTERNATE
PART 1 -GENERAL

1.1 SUMMARY
A. THIS SECTION INCLUDES LIQUEFIED-PETROLEUM (LP) GAS PIPING FROM THE METER TO TERMINAL UNITS WITHIN THE BUILDING. PRODUCTS INCLUDE PIPE, FITTINGS, AND JOINING MATERIALS; SPECIALTY VALVES; AND PRESSURE REGULATORS.
B. OPERATION AND MAINTENANCE DATA: FOR LP GAS SPECIALTIES AND ACCESSORIES TO INCLUDE IN EMERGENCY, OPERATION, AND MAINTENANCE MANUALS.

1.2 PROJECT CONDITIONS
A. GAS SYSTEM PRESSURE: ONE PRESSURE RANGE. MORE THAN 2.0 PSIG BUT NOT MORE THAN 5.0 PSIG.
B. DESIGN VALUES OF LP GAS SUPPLIED FOR THESE SYSTEMS ARE AS FOLLOWS:
1. LP GAS.
2. NOMINAL HEATING VALUE: 2500 BTU/CU. FT.
3. LP GAS NOMINAL SPECIFIC GRAVITY: 1.59.

1.3 SUBMITTALS
A. PRODUCT DATA: FOR THE FOLLOWING:
1. PIPE, FITTINGS AND COUPLINGS.
2. SPECIALTY VALVES. INCLUDE PRESSURE RATING, CAPACITY, SETTINGS, AND ELECTRICAL CONNECTION DATA OF SELECTED MODELS.
3. PRESSURE REGULATORS. INCLUDE PRESSURE RATING, CAPACITY, AND SETTINGS OF SELECTED MODELS.

1.4 QUALITY ASSURANCE
A. WELDING: QUALIFY PROCESSES AND OPERATORS ACCORDING TO ASME BOILER AND PRESSURE VESSEL CODE: SECTION IX.
B. ELECTRICAL COMPONENTS AND DEVICES: LISTED AND LABELED AS DEFINED IN NFPA 70, ARTICLE 100, BY A TESTING AGENCY ACCEPTABLE TO AUTHORITIES HAVING JURISDICTION, AND MARKED FOR INTENDED USE.
C. NFPA STANDARD: COMPLY WITH NFPA 54, "NATIONAL FUEL GAS CODE" AND NFPA 58, "LIQUEFIED PETROLEUM GAS CODE."

PART 2 - PRODUCTS

2.1 MANUFACTURERS
A. GAS VALVES
1. APOLLO.
2. LEGEND VALVE AND FITTING, INC.
3. NIBCO INC.
B. PLUG VALVES
1. OLSON TECHNOLOGIES, INC.; HOMESTEAD VALVE DIV.
2. ROCKWELL.
C. LINE PRESSURE REGULATORS
1. FISHER CONTROLS INTERNATIONAL, INC.; DIVISION OF EMERSON.
2. INVENSYS.
3. MAXITROL COMPANY.

2.2 PIPES, TUBES, FITTINGS, AND JOINING MATERIALS
A. STEEL PIPE: ASTM A 53/A 53M; TYPE E OR S; GRADE B; BLACK. WALL THICKNESS OF WROUGHT-STEEL PIPE SHALL COMPLY WITH ASME B36.10M.
1. MALLEABLE-IRON THREADED FITTINGS: ASME B16.3, CLASS 150, STANDARD PATTERN, WITH THREADED ENDS ACCORDING TO ASME B1.20.1.
2. STEEL WELDING FITTINGS: ASME B16.9, WROUGHT STEEL OR ASME B16.11, FORGED STEEL.
3. UNIONS: ASME B16.39, CLASS 150, MALLEABLE IRON WITH BRASS-TO-IRON SEAT, GROUND JOINT, AND THREADED ENDS ACCORDING TO ASME B1.20.1.
4. JOINT COMPOUND AND TAPE: SUITABLE FOR NATURAL GAS.
5. STEEL FLANGES AND FLANGED FITTINGS: ASME B16.5.
6. GASKET MATERIAL: THICKNESS, MATERIAL, AND TYPE SUITABLE FOR NATURAL GAS.

2.3 PROTECTIVE COATING
A. FURNISH PIPE AND FITTINGS WITH FACTORY-APPLIED, CORROSION-RESISTANT POLYETHYLENE COATING FOR USE IN CONTACT WITH MATERIALS THAT MAY CORRODE THE PIPE.

2.4 SPECIALTY VALVES
A. VALVES, NPS 2 AND SMALLER: THREADED ENDS ACCORDING TO ASME B1.20.1 FOR PIPE THREADS.
B. VALVES, NPS 2-1/2 AND LARGER: FLANGED ENDS ACCORDING TO ASME B16.5 FOR STEEL FLANGES AND ACCORDING TO ASME B16.24 FOR COPPER AND COPPER-ALLOY FLANGES.
C. GAS VALVES, NPS 2 AND SMALLER: ASME B16.33 BRONZE BODY AND 125-PSIG PRESSURE RATING. VALVE SHALL INCLUDE DESIGN FOR LOCKING (TAMPERPROOF FEATURE).
D. PLUG VALVES, NPS 2-1/2 AND LARGER: ASME B16.38 AND MSS SP-78 CAST-IRON, LUBRICATED PLUG VALVES, WITH 125-PSIG PRESSURE RATING. VALVE SHALL INCLUDE DESIGN FOR LOCKING (TAMPERPROOF FEATURE)

2.5 PRESSURE REGULATORS
A. DESCRIPTION: SINGLE STAGE AND SUITABLE FOR LP GAS SERVICE. INCLUDE STEEL JACKET AND CORROSION-RESISTANT COMPONENTS, ELEVATION COMPENSATOR, AND ATMOSPHERIC VENT.
1. NPS 2 AND SMALLER: THREADED ENDS ACCORDING TO ASME B1.20.1 FOR PIPE THREADS.
2. NPS 2-1/2 AND LARGER: FLANGED ENDS ACCORDING TO ASME B16.5 FOR STEEL FLANGES AND ACCORDING TO ASME B16.24 FOR COPPER AND COPPER-ALLOY FLANGES.
3. LINE PRESSURE REGULATORS: ANSI Z21.80 WITH 10-PSIG INLET PRESSURE RATING, UNLESS OTHERWISE INDICATED.
B. PRESSURE REGULATOR VENTS: FACTORY- OR FIELD-INSTALLED, CORROSION-RESISTANT SCREEN IN OPENING IF NOT CONNECTED TO VENT PIPING.

PART 3 - EXECUTION

3.1 EXAMINATION
A. EXAMINE ROUGHING-IN FOR LP GAS PIPING SYSTEM TO VERIFY ACTUAL LOCATIONS OF PIPING CONNECTIONS BEFORE EQUIPMENT INSTALLATION. PROCEED WITH INSTALLATION ONLY AFTER UNSATISFACTORY CONDITIONS HAVE BEEN CORRECTED.

3.2 PREPARATION
A. CLOSE EQUIPMENT SHUTOFF VALVES BEFORE TURNING OFF LP GAS TO PREMISES OR SECTION OF PIPING. PERFORM LEAKAGE TEST AS SPECIFIED IN "FIELD QUALITY CONTROL" ARTICLE TO DETERMINE THAT ALL EQUIPMENT IS TURNED OFF IN AFFECTED PIPING SECTION.

3.3 PIPING APPLICATIONS
A. FLANGES, UNIONS, TRANSITION, AND SPECIAL FITTINGS WITH PRESSURE RATINGS SAME AS OR HIGHER THAN SYSTEM PRESSURE RATING MAY BE USED IN APPLICATIONS BELOW, UNLESS OTHERWISE INDICATED.
B. LP GAS PIPING 2 TO 5 PSIG:
1. NPS 2 AND SMALLER: STEEL PIPE, MALLEABLE-IRON THREADED FITTINGS, AND THREADED JOINTS; OR STEEL WELDING FITTINGS, AND WELDED JOINTS.
2. LARGER THAN NPS 2: STEEL PIPE, STEEL WELDING FITTINGS, AND WELDED JOINTS.

3.4 VALVE APPLICATIONS
A. PIPING LINE VALVES, NPS 2 AND SMALLER: GAS VALVE.
B. PIPING LINE VALVES, NPS 2-1/2 AND LARGER: PLUG VALVE.

3.5 PIPING INSTALLATION
A. CONCEALED LOCATIONS: PROHIBITED LOCATIONS: DO NOT INSTALL GAS PIPING IN OR THROUGH CIRCULATING AIR DUCTS, CLOTHES OR TRASH CHUTES, CHIMNEYS OR GAS VENTS (FLUES), VENTILATING DUCTS, OR DUMBWAITER OR ELEVATOR SHAFTS.
B. DRIPS AND SEDIMENT TRAPS: INSTALL DRIPS AT POINTS WHERE CONDENSATE MAY COLLECT. LOCATE WHERE READILY ACCESSIBLE FOR CLEANING AND EMPTYING. DO NOT INSTALL WHERE CONDENSATE WOULD BE SUBJECT TO FREEZING. CONSTRUCT DRIPS AND SEDIMENT TRAPS USING TEE FITTING WITH BOTTOM OUTLET PLUGGED OR CAPPED. USE MINIMUM-LENGTH NIPPLE OF 3 PIPE DIAMETERS, BUT NOT LESS THAN 3 INCHES LONG, AND SAME SIZE AS CONNECTED PIPE. INSTALL WITH SPACE BETWEEN BOTTOM OF DRIP AND FLOOR FOR REMOVAL OF PLUG OR CAP.
C. INSTALL LP GAS PIPING AT UNIFORM GRADE OF 0.1 PERCENT SLOPE UPWARD TOWARD RISERS. USE ECCENTRIC REDUCER FITTINGS TO MAKE REDUCTIONS IN PIPE SIZES. INSTALL FITTINGS WITH LEVEL SIDE DOWN. CONNECT BRANCH PIPING FROM TOP OR SIDE OF HORIZONTAL PIPING.
D. INSTALL UNIONS IN PIPES NPS 2 AND SMALLER, ADJACENT TO EACH VALVE, AT FINAL CONNECTION TO EACH PIECE OF EQUIPMENT, AND ELSEWHERE AS INDICATED. INSTALL FLANGES ON VALVES, SPECIALTIES, AND EQUIPMENT HAVING NPS 2-1/2 AND LARGER CONNECTIONS. UNIONS ARE NOT REQUIRED ON FLANGED DEVICES.
E. INSTALL STRAINER ON INLET OF EACH LINE PRESSURE REGULATOR AND AUTOMATIC AND ELECTRICALLY OPERATED VALVE.
F. INSTALL PRESSURE GAGE UPSTREAM AND DOWNSTREAM FROM EACH LINE PRESSURE REGULATOR.
G. INSTALL VENT PIPING FOR GAS PRESSURE REGULATORS AND GAS TRAINS, EXTEND OUTSIDE BUILDING, AND VENT TO ATMOSPHERE. TERMINATE VENTS WITH TURNED-DOWN, REDUCING-ELBOW FITTINGS WITH CORROSION-RESISTANT INSECT SCREENS IN LARGE END UNLESS OTHERWISE INDICATED.

3.6 HANGER AND SUPPORT INSTALLATION
A. INSTALL HANGERS FOR HORIZONTAL STEEL PIPING WITH THE MAXIMUM SPACING AND MINIMUM ROD SIZES AS INDICATED ON THE DRAWINGS.

3.7 CONNECTIONS
A. DRAWINGS INDICATE GENERAL ARRANGEMENT OF LP GAS PIPING, FITTINGS, AND SPECIALTIES. INSTALL PIPING ADJACENT TO EQUIPMENT TO ALLOW SERVICE AND MAINTENANCE. CONNECT PIPING TO EQUIPMENT USING GAS WITH SHUTOFF VALVES AND UNIONS. INSTALL VALVE UPSTREAM FROM AND WITHIN 72 INCHES OF EACH PIECE OF EQUIPMENT. INSTALL UNION DOWNSTREAM FROM VALVE.
B. SEDIMENT TRAPS: INSTALL TEE FITTING WITH CAPPED NIPPLE IN BOTTOM TO FORM DRIP, AS CLOSE AS PRACTICAL TO INLET OF EACH PIECE OF EQUIPMENT USING GAS.
C. GROUND EQUIPMENT ACCORDING NATIONAL ELECTRIC CODE. DO NOT USE GAS PIPE AS GROUNDING ELECTRODE.

3.8 LABELING AND IDENTIFYING
A

PLUMBING EQUIPMENT SCHEDULE

MARK	FIXTURES				TRIM			ACCESSORIES							SUPPLY SIZE		WASTE SIZE	NOTES	RIM HEIGHT	FLUSH VALVE HEIGHT	BUBBLER HEIGHT	
	DESCRIPTION	ADA	MANUF.	FIXTURE MODEL NO.	FLUSH VALVE MODEL NUMBER	MANUF.	TRIM MODEL NO.	SEATS	SUPPLIES	STRAINER	TRAP	CONTINUOUS WASTE	INSULATION KIT	MANUF.	CW	HW						
P-1	WATER CLOSET	ADA	AM. STANDARD	3043.001	G2 111 HW-1.6-LT	SLOAN	-	9400CT	-	-	-	-	-	CHURCH	1-1/4"	-	3"	1, 3	16-1/2"	28"	-	
P-2	URINAL	ADA	AM. STANDARD	6590.001	ECOS 186 HW-0.125-LT	SLOAN	-	-	-	-	-	-	-	-	1"	-	2"	3, 4	4 15-1/4"	26-3/4"	-	
P-3	LAVATORY	ADA	AM. STANDARD	9024.004EC	4 -	DELTA	22C141	4 -	2165LK	155WC	4 8902C	-	PW2000WC	McGUIRE	1/2"	1/2"	2"	2, 3, 11, 13	34"	-	-	
P-4	LAVATORY	ADA	AM. STANDARD	9024.011EC	-	AM. STANDARD	605B.105	-	2165LK	155WC	8902C	-	-	McGUIRE	1/2"	1/2"	2"	2, 3, 4, 18, 19		-	-	
P-5	KITCHEN SINK	ADA	REGENCY	600HS17SPDST	-	-	NOTE 15	-	2165LK	-	8902C	-	PW2000WC	McGUIRE	1/2"	1/2"	2"	2, 3, 4, 17		-	-	
P-6	SHOWER	ADA	BEST BATH	LSS6333A75B	-	POWERS	E420-S22M22YW	-	-	-	-	-	-	-	1/2"	1/2"	2"	3, 7, 8		-	-	
P-7	OUTDOOR SHOWER	-	-	-	-	SYMMONS	SHOWEROFF 3-325	-	-	-	-	-	-	-	1/2"	1/2"	2"	8, 16		-	-	
P-8	WALL MOUNT EYEWASH	-	BRADLEY	S1944011BBC	-	-	-	-	-	-	-	-	-	-	1/2"	1/2"	-	12	-	-	-	
P-9	WATER FOUNTAIN	ADA	ELKAY	EDFPBVM117FPK	-	-	-	-	-	-	8912C	-	-	-	1/2"	-	2"	10		-	32-7/8"	38-3/8"
P-10	MOP SINK	-	STERN WILLIAMS	SB-902	-	T&S BRASS	B-0657	-	-	-	-	-	-	-	3/4"	3/4"	3"	3, 5, 6	12"	-	-	
P-11	MOP SINK	-	REGENCY	600SM16206	-	T&S BRASS	B-0657	-	-	-	-	-	-	-	3/4"	3/4"	3"	3, 5, 6	10"	-	-	
P-12	TRIPLE BOWL SINK	-	STEELTON	522CS31014LK	-	T&S BRASS	B-0133-ADF12-B	-	-	-	-	-	-	-	3/4"	3/4"	1 1/2"	9		-	-	
P-13	ICE MACHINE CONNECTION	-	GUY GRAY	BIM 875AB	-	-	-	-	-	-	-	-	-	-	1/2"	-	-	14	-	-	-	
P-14	WASHER CONNECTION BOX	-	GUY GRAY	B200X	-	-	-	-	-	-	-	-	-	-	1/2"	1/2"	2"	-	-	-	-	

NOTES:

1. HANDICAPPED, FLOOR MOUNTED TOILET.
2. ALL SUPPLIES AND WASTE ASSEMBLIES SHALL BE CHROME PLATED.
3. USE WHITE SILICONE CAULK TO SEAL AROUND THE PERIMETER OF ALL PLUMBING FIXTURES WHERE THE FIXTURE MAKES CONTACT WITH THE BUILDING STRUCTURE.
4. PROVIDE JAY R. SMITH FIXTURE SUPPORT AS REQUIRED TO MATCH FIXTURE.
5. PROVIDE WITH STAINLESS STEEL WALL GUARD, HOSE AND BRACKET, AND 3 POSITION MOP HANGER. SEE DETAIL FOR CLARIFICATION.
6. WHEN FAUCETS BY ALTERNATE MANUFACTURERS ARE PROVIDED, CERAMIC CHECK VALVES MUST BE PROVIDED TO PREVENT DCW/DHW CROSSOVER.
7. PROVIDE WITH FOLD-UP BENCH, HOSE AND WAND, GRAB BAR, SOAP DISH, AND COLLAPSIBLE WATER STOP. PROVIDE WITH CURTAIN, ROD, AND RINGS PER THE ARCHITECTURAL PLANS AND SPECIFICATIONS.
8. PROVIDE ASSE 1016 RATED SHOWER VALVE PER BASIS OF DESIGN.
9. WASTE PIPING IS BELOW SINK WITH INDIRECT CONNECTION TO FLOOR DRAIN BELOW.
10. PROVIDE WOOD BLOCKING PER MANUFACTURERS RECOMMENDATIONS.
11. PROVIDE WITH MV-2A.
12. PROVIDE WITH MV-4. 4
13. PROVIDE WOOD BLOCKING PER MANUFACTURERS RECOMMENDATIONS.
14. PROVIDE AND INSTALL OCEANLOCH FILTER ASSEMBLY PER ICE MACHINE MANUFACTURER'S REQUIREMENTS.
15. FAUCET INCLUDED WITH SINK PACKAGE.
16. PROVIDE WITH MV-2A POINT OF USE MIXING VALVE SET TO 95°F OUTPUT TEMPERATURE.
17. PROVIDE WITH TP-3 TRAP PRIMER ADAPTER AND ROUTE TRAP PRIMER PIPING TO ADJACENT FLOOR DRAIN.
18. PROVIDE IPC CORP. 82202 LAVATORY SHIELD, OR SIMILAR.
19. PROVIDE WITH AMERICAN STANDARD 777B10 SENSOR OPERATED SOAP DISPENSER WITH PK00.PAC PLUG-IN PACK. SINGLE PLUG-IN PACK SHALL SERVE BOTH FAUCET AND SOAP DISPENSER. 4

MIXING VALVE SCHEDULE

MARK	MANUFACTURER	MODEL NUMBER	RATING	FLOW (GPM)	CONNECTION SIZE INLET / OUTLET	PRESSURE LOSS AT RATED FLOW	NOTES
MV-1A	WATTS	LFMM431HL	ASSE 1017	0.5-10	3/4" / 3/4"	< 5 PSIG	1, 2
MV-1B	WATTS	LFMM432HL	ASSE 1017	0.5-23	3/4" / 1"	< 5 PSIG	1, 2
MV-1C	WATTS	LFLM490	ASSE 1017	1.5-13	3/4" / 3/4"	< 5 PSIG	1, 2
MV-2A	WATTS	LFMMVM1-US	ASSE 1070	0.5-2.5 GPM	3/8" / 3/8"	< 8 PSIG	3, 8
MV-4	BRADLEY	S19-2000-EFX-8	ASSE 1071	1.5-3 GPM	1/2" / 1/2"	5 PSIG	4, 5, 6, 7

NOTES:

1. PROVIDE WITH "RF" ROUGH BRONZE FINISH, "DT" COLOR CODED DIAL THERMOMETER (0-140F) AND "TC" TEST CONNECTION OPTIONS.
2. THE DESIGN INTENT FOR MV-1 IS TO PROVIDE 120F DHW, UTILIZING HOT WATER FROM DOMESTIC HOT WATER SOURCE.
3. THE DESIGN INTENT FOR MV-2A IS TO PROVIDE TEMPERED WATER (109F MAX) AT EACH FIXTURE, USING THE DHW SUPPLY LOOP.
4. THE DESIGN INTENT FOR MV-4 IS TO TEMPER WATER TO EYEWASH FIXTURES.
5. PROVIDE WITH INTEGRAL CHECKSTOPS.
6. OUTLET PIPING WITH BALL VALVE AND DIAL THERMOMETER.
7. SEE DETAILS FOR CONNECTION ARRANGEMENT.
8. THE LISTED VALVE IS TRIPLE LISTED FOR ASSE 1017 (MASTER MIXER), ASSE 1069 (GANGED SHOWERS AND TUBS) AND ASSE 1070 (POINT OF USE) STANDARDS, WHEN A SEPARATE VALVE IS SUPPLIED FOR EACH RATING. FOR SINGLE FIXTURE INSTALLATIONS, INSTALL 2 VALVES IN SERIES TO COMPLY WITH ASSE 1017 AND ASSE 1070. SEE DETAILS FOR CLARIFICATION.

PLUMBING PIPING APPLICATION CHART / FITTING APPLICATION

LINE	SYSTEM	PIPE SIZE	PRESSURE RANGE	MATERIAL	ASTM STANDARD	MANUF. PROCESS	WEIGHT	JOINT	PRESSURE RATING (PSIG)	MATERIAL	CLASS	JOINT
1	DOMESTIC HOT AND COLD WATER PIPING	NPS 4" AND SMALLER	-	WROUGHT COPPER	B 88	HARD DRAWN	TYPE L	95-5 SOLDER	350	WROUGHT COPPER	-	95-5 SOLDER
2	DOMESTIC COLD WATER PIPING (UNDERGROUND)	NPS 2" AND SMALLER	-	WROUGHT COPPER	B 88	HARD DRAWN	TYPE K	BRAZED	350	WROUGHT COPPER	-	BRAZED
3	SANITARY PIPING	ALL SIZES BELOW GROUND	-	PVC DWV	D 2665	EXTRUDED	SCHEDULE 40	SOLVENT CEMENT	-	PVC DWV	-	SOLVENT CEMENT
4	SANITARY AND VENT PIPING	ALL SIZES ABOVE GROUND	-	NO HUB CAST IRON	A 74 CISPI 301	CAST	SERVICE WEIGHT	COMPRESSION COUPLINGS	-	NO HUB CAST IRON	-	COMPRESSION COUPLINGS
5	STORM PIPING	ALL SIZES BELOW GROUND	-	PVC DWV	D 2665	EXTRUDED	SCHEDULE 40	SOLVENT CEMENT	-	PVC DWV	-	SOLVENT CEMENT
6	GREASE WASTE PIPING	ALL SIZES PRIOR TO ENTERING GREASE TRAP	-	NO HUB CAST IRON	A 74 CISPI 301	CAST	SERVICE WEIGHT	COMPRESSION COUPLINGS	-	NO HUB CAST IRON	-	COMPRESSION COUPLINGS
7	NATURAL GAS/ LIQUID PROPANE	NPS 2" AND SMALLER	UP TO 5 PSIG	STEEL	A 53 B	CBW	SCHEDULE 40	THREAD	510	MALLEABLE IRON	150	THREAD
8	NATURAL GAS/ LIQUID PROPANE	ALL SIZES BELOW GROUND	UP TO 5 PSIG	POLYETHYLENE	D 2513	EXTRUDED	MEDUIM DENSITY	FUSED	-	HIGH DENSITY RESIN	-	FUSED

NOTES:

1. REFER TO SPECIFICATIONS FOR MARKING REQUIREMENTS. ADHESIVE LABELS ARE NOT ACCEPTABLE, EXCEPT AS REQUIRED FOR NFPA 99 COMPLIANCE.
2. CEILINGS ARE PLENUM RATED IN VARIOUS AREAS.
3. PROVIDE HIGH PERFORMANCE COATED CAST IRON MEETING EN 877 PERFORMACE SPECIFICATIONS FOR GREASE WASTE PIPING.

PIPE INSULATION SCHEDULE

SERVICE	INSULATION TYPE	FINISH / JACKET		MAINS					RUNOUTS
		INDOOR	OUTDOOR	1-1/4" AND LESS	1-1/2" TO 2"	2-1/2" TO 4"	5" TO 6"	8"	UP TO 1"
DOMESTIC COLD WATER	FIBERGLASS	ASJ-SSL	ASJ-SSL & AJ	0.5"	0.5"	0.5"	-	-	0.5"
DOMESTIC HOT WATER	FIBERGLASS	ASJ-SSL	ASJ-SSL & AJ	1"	1.5"	1.5"	1.5"	-	1"

NOTES:

1. ALL PIPING SYSTEMS 2-1/2" AND ABOVE SHALL HAVE CALCIUM SILICATE INSERTS AT HANGERS.
2. PROTECT INDIRECT HUNG PIPING WITH GALVANIZED INSULATION PROTECTION SHIELDS.
3 ALL PIPING SHALL HAVE INSULATION CONTINUOUS THROUGH HANGERS.
4. PROVIDE CONTINUOUS VAPOR BARRIER ON ALL PIPING.
5. TIGHTEN ALL HANGER NUTS AFTER INSTALLATION OF INSULATION THROUGH HANGERS.
6. RUNOUTS INDICATE PIPING TO INDIVIDUAL UNITS, NOT EXCEEDING 12 FEET IN LENGTH.
7. FINISH/JACKET LEGEND: ALL SERVICE JACKET WITH SELF SEALING LAP (ASJ-SSL), ALUMINUM JACKET (AJ).
8. THE FIRST 8 FEET OF DOMESTIC COLD WATER PIPING ON WATER HEATER INLETS SHALL HAVE 1" INSULATION.
9. DOMESTIC COLD WATER BELOW GRADE SHALL BE FLEXIBLE ELASTOMERIC.

COMMONWEALTH OF VIRGINIA
PHILLIP L. GENTRY
Lic. No. 025757
03/29/2024
PROFESSIONAL ENGINEER

PLEASE READ BEFORE OPENING ELECTRONIC FILES: NORMAN SMITH ARCHITECTURE

DRAWINGS AND DESIGN © 2020 NORMAN SMITH ARCHITECTURE.
DRAWINGS AND SPECIFICATIONS AND THE IDEAS, DESIGNS AND ARRANGEMENTS REPRESENTED THEREIN ARE THE PROPERTY OF THE ARCHITECT AND PERMANENT EXCEPTION, THE PROPERTY OF THE ARCHITECT AND SHALL NOT BE DISCLOSED TO OTHERS, EXCEPT TO PROJECT CONTRACTORS WHEN NECESSARY TO CARRY OUT THE PROJECT, NOR SHALL THEY BE REPRODUCED OR USED FOR OTHER PROJECTS EXCEPT BY AGREEMENT WITH THE ARCHITECT. THE ARCHITECT RETAINS THE COPYRIGHT.

DRAWINGS AND SPECIFICATIONS ARE INSTRUMENTS OF SERVICE THROUGH WHICH THE ARCHITECT DISCLOSES HIS OPINION OF THE PROJECT REQUIREMENTS. THE PLANS SHALL BE OFFICIAL AND GOVERNING AS THE ARCHITECT HAS EXERCISED HIS PROFESSIONAL JUDGMENT IN PREPARING THEM. THE ARCHITECT ASSUMES NO RESPONSIBILITY FOR THE ACCURACY OF ELECTRONIC FILES AS THEY MAY BE MODIFIED WITHOUT THE ARCHITECT'S KNOWLEDGE.

IF THERE EXISTS AN ISSUE OR DISPUTE WITH THE DRAWINGS, THE PLANS SHALL BE OFFICIAL AND GOVERNING AS THE ARCHITECT HAS EXERCISED HIS PROFESSIONAL JUDGMENT IN PREPARING THEM. IF THERE EXISTS AN ISSUE OR DISPUTE WITH THE SPECIFICATIONS, THE ARCHITECT'S INTERPRETATION SHALL BE FINAL. THE ARCHITECT ASSUMES NO RESPONSIBILITY FOR CONFLICTS, OMISSIONS, OR DISCREPANCIES IN THE SPECIFICATIONS OR DRAWINGS UNTIL THE ARCHITECT HAS BEEN NOTIFIED OF THE PROBLEM AND HAS ISSUED A WRITTEN INTERPRETATION OR CLARIFICATION.

VERIFY ALL BUILDING AND FIELD CONDITIONS PRIOR TO COMMENCING WITH WORK. REPORT ANY ERRORS, OMISSIONS, OR CONFLICTS IN THE CONTRACT DOCUMENTS TO OWNER'S PROJECT MANAGER OR ARCHITECT. ANY VARIANCE BETWEEN FACTUAL AND DRAWINGS.

No.	Date	Revision Notes	Zone	Appr
4	3/29/24	rebid revisions		

No.	Date	Issue Notes
2	01/3/2024	release for bid
1	12/7/2023	permit subm

Designed By
Drawn By
Checked By
Reviewed By
Technical By
Project Manager
Date
Revision
Project 23703.culpeper
Drawing Code
CAD File Name
Plot Date

Design Firm
NORMAN SMITH ARCHITECTURE
1341 H Street, Washington, DC 20002-4906
3637 State Mills Road, Sperryville, VA 22740
T 202.462.5888 www.normansmitharchitecture.com

Consultant
VALLEY ENGINEERING
4901 Crowe Drive, Mount Crawford, VA 22841
T 540.434.5365 www.valleyesp.com

Project Title
Culpeper County
Community Pool Project
16388 Competition Drive
Culpeper, VA

Sheet Title
PLUMBING SCHEDULES

Scale
NTS

Sheet No.
P000.7
of

WATER HEATER SCHEDULE

MARK	MANUFACTURER	MODEL NUMBER	CAPACITY (GALLONS)	GPH RECOVERY 100°F RISE	INPUT (KW)	WEIGHT (LBS)	VOLT/PH/HZ	NOTES
DWH-1	BRADFORD WHITE	VR-150-(90)	150	369	90	2000	208/3/60	1, 2, 3, 5
DWH-2	BRADFORD WHITE	CEHD80(A)(18)3*CF	80	75	18	1050	208/3/61	1, 2, 3, 5
DWH-3	BRADFORD WHITE	LE230LN3-3	28	25	6	350	208/3/62	2, 3, 4, 5

NOTES:
1. PROVIDE WITH WATER HEATER PLATFORM RATED FOR WEIGHT OF FILLED WATER HEATER TO ELEVATE ABOVE FLOOR.
2. UNIT SHALL BE RATED FOR 150 PSI AND TESTED AT 300 PSI.
3. PROVIDE WITH T&P RELIEF VALVE AND EXPANSION TANK (SEE SCHEDULE).
4. PROVIDE WITH WALL MOUNTED WATER HEATER SUPPORT WITH INTEGRAL DRAIN CONNECTION RATED FOR WEIGHT OF FILLED WATER HEATER.
5. SET POINT SHALL BE 140°F.

FLOOR DRAIN SCHEDULE

MARK	MANUFACTURER	MODEL NUMBER	SIZE	NOTES
FD-1	JAY R. SMITH	2005LXH-A05NB-P050	NOTE 3	1, 2, 4
FD-2	JAY R. SMITH	3421Y-12	NOTE 3	2, 5, 6
FD-3	JAY R. SMITH	3200Y-12	NOTE 3	2, 5, 6
FD-4	JAY R. SMITH	3020Y	NOTE 3	2, 6

NOTES:
1. SPEEDI-SET CONNECTION, TOILETS, SMALL MECHANICAL ROOMS.
2. USE DEEP SEAL TRAPS ON ALL FLOOR DRAINS.
3. MATCH PIPE SIZE SHOWN ON PLANS.
4. PROVIDE TRAP PRIMERS FOR ALL FLOOR DRAINS UNLESS SPECIFICALLY NOTED OTHERWISE.
5. PROVIDE WITH REMOVABLE, HALF-GRATE TOP.
6. PROVIDE WITH MECHANICAL TRAP SEALS, JAY R SMITH QUAD-CLOSE OR SIMILAR.

TRAP PRIMER SCHEDULE

MARK	MANUFACTURER	MODEL NUMBER	SIZE	NOTES
TP-1	PRECISION PLUMBING PRODUCTS	PX-500	1/2" NPT	1, 2, 3
TP-2	JAY R SMITH	2698-ADA	1/2" NPT	-

NOTES:
1. INSTALL TP-1'S WHEREVER TRAP PRIMERS ARE NOTED, UNLESS ANOTHER TRAP PRIMER IS SPECIFICALLY NOTED. INSTALL DU-U ADAPTERS WHERE REQUIRED TO CONNECT ADDITIONAL LINES.
2. CONNECT OFF TOP OF SUPPLY PIPING TO PREVENT DEBRIS BUILD UP, AS SHOWN ON DETAILS.
3. COORDINATE EXACT MODEL NUMBER WITH NUMBER OF CONNECTIONS.

GREASE INTERCEPTOR SCHEDULE

MARK	MANUFACTURER	MODEL NUMBER	FLOW (GPM)	NOTES
GI-1	ZURN	Z1170-E	50	1, 2

NOTES:
1. PROVIDE WITH FLOW CONTROL AND SOLIDS INTERCEPTOR.
2. COORDINATE EXTENSION DEPTH WITH MANUFACTURER AND REQUIRED GREASE INTERCEPTOR INVERT.

HYDRANT SCHEDULE

MARK	MANUFACTURER	MODEL NUMBER	SIZE	NOTES
WH-1	JAY R. SMITH	5609QT	3/4"	1

NOTES:
1. PROVIDE WITH HOSE VACUUM BREAKER.

CLEANOUT SCHEDULE

MARK	MANUFACTURER	MODEL NUMBER	SIZE	NOTES
CO-1	JAY R. SMITH	4031LXH-NB	NOTE 3	1
CO-2	JAY R. SMITH	4261LXH	NOTE 3	2

NOTES:
1. FINISHED AREAS, SPEEDI-SET, SEE DRAWINGS FOR SIZE.
2. WITH 16 X 16 X 8 CONCRETE PAD PLACED AROUND CLEANOUT (OUTSIDE ONLY).
3. MATCH PIPE SIZE SHOWN ON PLANS.

PIPE HANGER SCHEDULE

	PIPE SIZE	UP TO 3/4"	1" TO 1-1/4"	1-1/2" TO 2"	2-1/2" TO 3"	4"	5" TO 6"	8"	10"	12"	14"
COPPER PIPE	HANGER SPACING	5'-0"	6'-0"	8'-0"	9'-0"	11'-0"	13'-0"	16'-0"	18'-0"	19'-0"	-
	HANGER ROD DIAMETER	3/8"	3/8"	3/8"	1/2"	1/2"	5" = 1/2" 6" = 5/8"	3/4"	3/4"	3/4"	-
CAST IRON PIPE	HANGER ROD DIAMETER	-	-	3/8"	1/2"	5/8"	5" = 5/8" 6" = 3/4"	7/8"	7/8"	7/8"	-
STEEL PIPE (SCHEDULE 40)	HANGER SPACING	7'-0"	7'-0"	9'-0"	11'-0"	13'-0"	16'-0"	19'-0"	22'-0"	23'-0"	25'-0"
	HANGER ROD DIAMETER	3/8" - 16	3/8" - 16	3/8" - 16	1/2" - 13	5/8" - 11	3/4" - 10	3/4" - 10	7/8" - 9	7/8" - 9	1" - 8

NOTES:
1. PIPE HANGERS FOR SUSPENDED PIPING SHALL BE ADJUSTABLE CLEVIS TYPE.
2. INSTALL HANGERS WITHIN 12" OF PIPING CHANGE IN DIRECTION AND AT VALVES, STRAINERS, TRAPS, AND IN LINE EQUIPMENT.
3. HANG PIPING FROM STEEL STRUCTURE.
4. HANGER SPACING FOR CAST IRON PIPE SHALL BE MAXIMUM 10 FEET AND MINIMUM OF ONE (1) HANGER PER SECTION OF PIPE. LOCATE HANGER CLOSE TO JOINT. PROVIDE ADDITIONAL HANGERS AT CHANGES OF DIRECTION AND BRANCH CONNECTIONS.
5. HANGER SPACING FOR PVC PIPING SHALL BE 4 FEET OR MANUFACTURER'S RECOMMENDATION, WHICHEVER IS LESS.
6. HANGER ROD DIAMETER FOR PVC PIPE SHALL BE AS LISTED FOR COPPER PIPE.

EXPANSION TANK SCHEDULE

MARK	MANUFACTURER	MODEL NUMBER	CAPACITY (GALLONS)	PRV SETTING (PSI)	CONNECTION SIZE	NOTES
ET-1	AMTROL	ST-25V	10.3	125	3/4" NPT	-
ET-2	AMTROL	ST-12	3.2	125	1" NPT	-

NOTES:
1. NOT USED.

PLUMBING VALVE APPLICATION CHART

LINE	SYSTEM	PIPE SIZE	TYPE	MODEL	MANUF.
1	DOMESTIC HOT AND COLD WATER PIPING	1/2" TO 2"	FULL PORT, BALL VALVE	S-585-66-LF	NIBCO
2	MAIN SERVICE ENTRANCE	3" AND BELOW	GATE VALVE	F-619-RW	NIBCO
3	DOMESTIC HOT AND COLD WATER PIPING	1/2" TO 2"	CHECK VALVES (VERTICAL)	S-480-Y-LF	NIBCO
4	DOMESTIC HOT AND COLD WATER PIPING	1/2" TO 2"	CHECK VALVES (HORIZONTAL)	S-413-Y-LF	NIBCO
5	NATURAL GAS/ LIQUID PROPANE	1/2" TO 2"	BALL VALVE, ASME B16.33	T-1001	LEGEND

NOTES:
1. CONTRACTOR SHALL PROVIDE ALL ISOLATION VALVES TO ACHIEVE THE DESIGN INTENT.
2. PROVIDE STAINLESS STEEL BALL AND STEAM, PER NOTED OPTIONS ABOVE.
3. PROVIDE EXTENDED VALVE HANDLES FOR ALL INSULATED PIPING SYSTEMS TO ACCOMMODATE VALVE OPERATION WITHOUT DAMAGING INSULATION. SEE INSULATION SCHEDULE FOR COORDINATION OF HANDLE LENGTH.
4. VALVES WHICH ARE NOT LEAD FREE CERTIFIED MAY ONLY BE USED FOR INDIVIDUAL NON-CONSUMPTION EQUIPMENT CONNECTIONS WITH APPROVAL IN ADVANCE FROM THE AHJ.

BACKFLOW PREVENTER SCHEDULE

MARK	USE	MANUFACTURER / MODEL NUMBER	ASSE RATING	SIZE	NOTES
BFP-1	MAIN WATER ENTRANCE	WATTS / LF909	1013	NOTE 1	1, 2, 5
BFP-2	BEVERAGE EQUIPMENT	WATTS / LF7	1024	3/4"	1, 2, 3, 4, 5

NOTES:
1. MATCH PIPE SIZE SHOWN ON PLANS.
2. SEE MANUFACTURERS INSTALLATION INSTRUCTIONS FOR COORDINATION.
3. DO NOT INSTALL IN CONCEALED LOCATIONS SUCH AS WALLS. INSTALL IN ACCESSIBLE LOCATIONS (EX. BEHIND REMOVABLE CASEWORK PANELS, ETC.) PER OEM INSTALLATION INSTRUCTIONS.
4. BEVERAGE EQUIPMENT REFERS TO ANY NON-CARBONATED BEVERAGE EQUIPMENT, INCLUDING BUT NOT LIMITED TO: COFFEE MAKERS, ICE MACHINES, TEA BREWERS, NON-CARBONATED DRINK DISPENSERS, OR JUICE DISPENSERS.
5. ALL BACKFLOW PREVENTERS SERVING POTABLE WATER SYSTEMS SHALL MEET LEAD FREE REQUIREMENTS. COORDINATE EXCEPTIONS (EX. MECHANICAL EQUIPMENT MAKEUP) WITH AHJ PRIOR TO INSTALLATION.

COMMONWEALTH OF VIRGINIA
PHILLIP L. GENTRY
Lic. No. 025757
01/03/2024
PROFESSIONAL ENGINEER

PLANS PREPARED UNDER ELECTRONIC FILES WERE PROVIDED.

DRAWINGS AND DESIGN © 2023 NORMAN SMITH ARCHITECTURE.
DRAWINGS AND SPECIFICATIONS AND THE IDEAS, DESIGNS AND ARRANGEMENTS REPRESENTED THEREIN ARE THE PROPERTY OF THE ARCHITECT AND PERMANENT RIGHTS ARE RESERVED BY THE ARCHITECT. THEY ARE NOT TO BE USED BY ANY PERSON OR ENTITY FOR ANY PURPOSE OTHER THAN THE PROJECT FOR WHICH THEY WERE PREPARED AND DELIVERED TO THE OWNER PURSUANT TO THE CONTRACT BETWEEN THE OWNER AND THE ARCHITECT. THEY ARE NOT TO BE ORIGINALLY OR FUNDAMENTALLY MODIFIED BY THE OWNER OR ANYONE OTHER THAN THE ARCHITECT OR ANYONE ACTING UNDER THE ARCHITECT'S DIRECTION OR SUPERVISION. THEY ARE NOT TO BE REPRODUCED, CHANGED OR COPIED IN ANY FORM OR MANNER WHATSOEVER, NOR ARE THEY TO BE ASSIGNED TO ANY THIRD PARTY, WITHOUT FIRST OBTAINING THE WRITTEN PERMISSION AND CONSENT OF THE ARCHITECT. ANY LEGAL RIGHTS ARISING FROM THE ILLEGAL REPRODUCTION, CHANGING OR COPYING OF THE DRAWINGS AND SPECIFICATIONS WITHOUT THE WRITTEN CONSENT OF THE ARCHITECT SHALL BE THE RESPONSIBILITY OF THE PARTY MAKING THE ILLEGAL REPRODUCTION, CHANGING OR COPYING.

IF THIS FIGURE IS USED TO DESIGN A PORT OF THE PROJECT, THE ARCHITECT, THE ENGINEER AND THE CONSULTANTS ASSUME NO RESPONSIBILITY FOR THE ACCURACY OF THE DESIGN OF THE PORTION OF THE PROJECT DESIGNED BY OTHERS. THE ARCHITECT, THE ENGINEER AND THE CONSULTANTS ASSUME NO RESPONSIBILITY FOR THE ACCURACY OF THE DESIGN OF THE PORTION OF THE PROJECT DESIGNED BY THE ARCHITECT, THE ENGINEER AND THE CONSULTANTS IF THE DESIGN OF THE PORTION OF THE PROJECT DESIGNED BY OTHERS IS NOT ACCURATELY REPRESENTED ON THE DRAWINGS OR IF THE DESIGN OF THE PORTION OF THE PROJECT DESIGNED BY OTHERS IS CHANGED AFTER THE ARCHITECT, THE ENGINEER AND THE CONSULTANTS HAVE COMPLETED THEIR PORTION OF THE DESIGN.

VERIFY ALL ELEVATIONS AND DIMENSIONS PRIOR TO CONSTRUCTION. IN THE EVENT OF ANY DISCREPANCY, NOTIFY THE ARCHITECT IMMEDIATELY. DO NOT SCALE DRAWINGS. CONTRACTOR IS RESPONSIBLE FOR ALL DIMENSIONS AND CONDITIONS ON THE JOB AND OWNER'S PROJECT MANAGER OF ANY VARIANCE BETWEEN FACTS AND DRAWINGS.

No.	Date	Reason
2	01/3/2024	release for bid
1	12/7/2023	permit subm

Issue Notes

Designed By | Date
Drawn By | Reason
Checked By | Project 23/703:culpeper
Reviewed By | Drawing Code
Submitted By | CAD File Name
Project Manager | Plot Date

Design Firm
NORMAN SMITH ARCHITECTURE
1341 H Street, Washington, DC 20002-4906
3637 Slate Mills Road, Spenryville, VA 22740
T 202.462.5588 www.normansmitharchitecture.com

Consultant
VALLEY ENGINEERING
4901 Crowe Drive, Mount Crawford, VA 22841
T 540.434.6385 www.valleyesp.com

Project Title
Culpeper County
Community Pool Project
16388 Competition Drive
Culpeper, VA

Sheet Title
PLUMBING SCHEDULES

Scale
NTS

Sheet No.
P000.8
of

No.	Date	Revision Notes	Appr

Zone

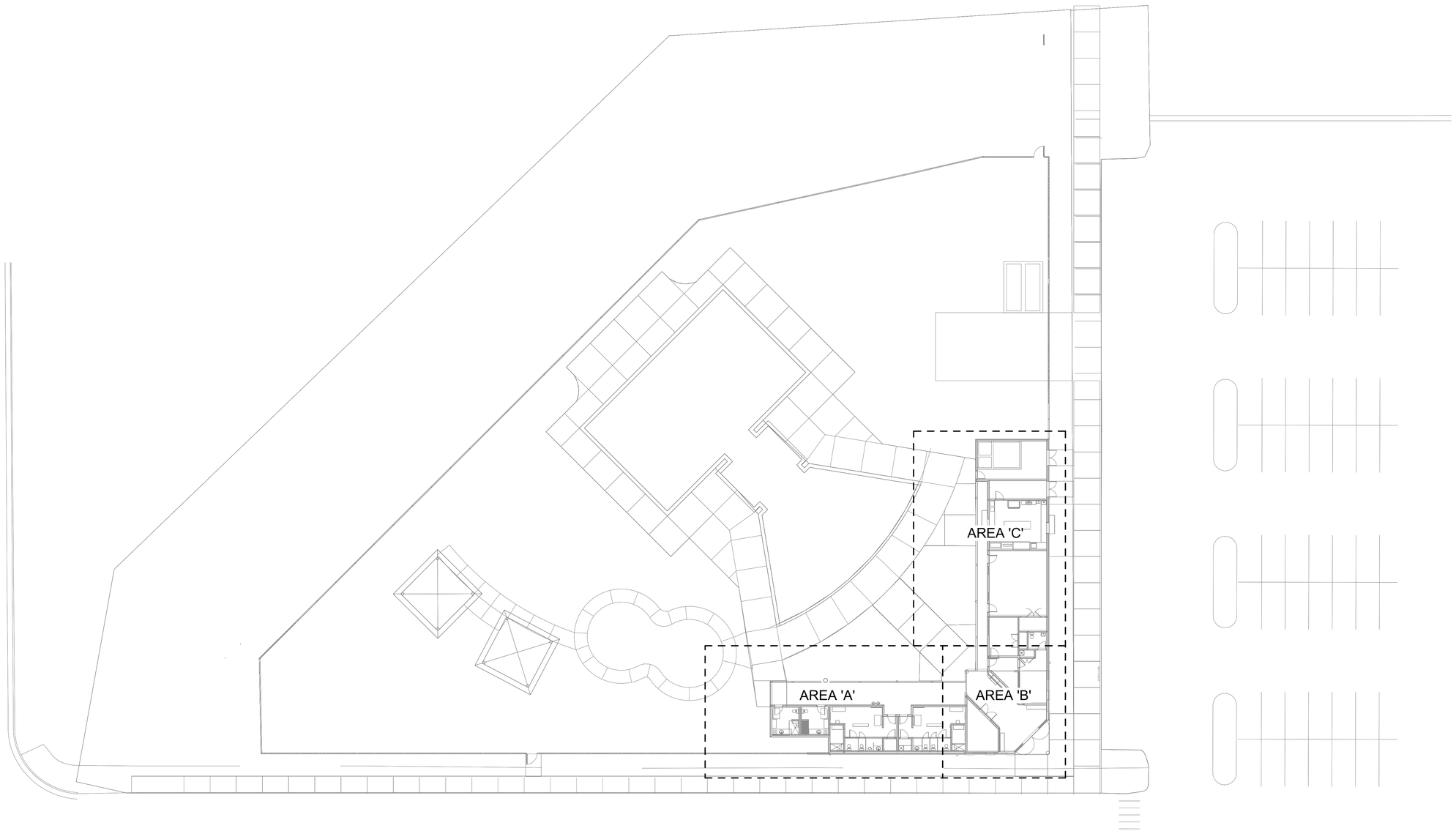

PLUMBING OVERALL PLAN

SCALE: 1" = 20'-0"

PLAN READ BEFORE DRAWING ELECTRONIC FILES WERE PROVIDED:

DRAWINGS AND DESIGN & SPEC NORMAN SMITH ARCHITECTURE. DRAWINGS AND SPECIFICATIONS AND THE IDEAS DESIGNS AND ARRANGEMENTS REPRESENTED THEREBY ARE THE PROPERTY OF THE ARCHITECT AND WERE PREPARED FOR USE ON THIS PROJECT ONLY AND SHALL NOT BE USED BY OTHERS EXCEPT BY AGREEMENT WITH THE ARCHITECT. THEY SHALL NOT BE USED ON OTHER PROJECTS OR EXTENSIONS TO THIS PROJECT EXCEPT BY AGREEMENT WITH THE ARCHITECT. THEY SHALL NOT BE CHANGED OR HAVE THEIRS REMOVED. THE ARCHITECT AND CONSULTANTS DO NOT REPRESENT THE DRAWINGS AND SPECIFICATIONS AS BEING A COMPLETE SET OF DOCUMENTS. THE DRAWINGS AND SPECIFICATIONS MAY BE INCOMPLETE AND MUST BE SUPPLEMENTED BY OTHER DRAWINGS AND SPECIFICATIONS. THE CONTRACTOR AND SUBCONTRACTORS ARE ADVISED THAT THE DRAWINGS AND SPECIFICATIONS MAY NOT INDICATE OR INCLUDE ALL OF THE CORRECT AND CURRENT REQUIREMENTS FOR CONSTRUCTION

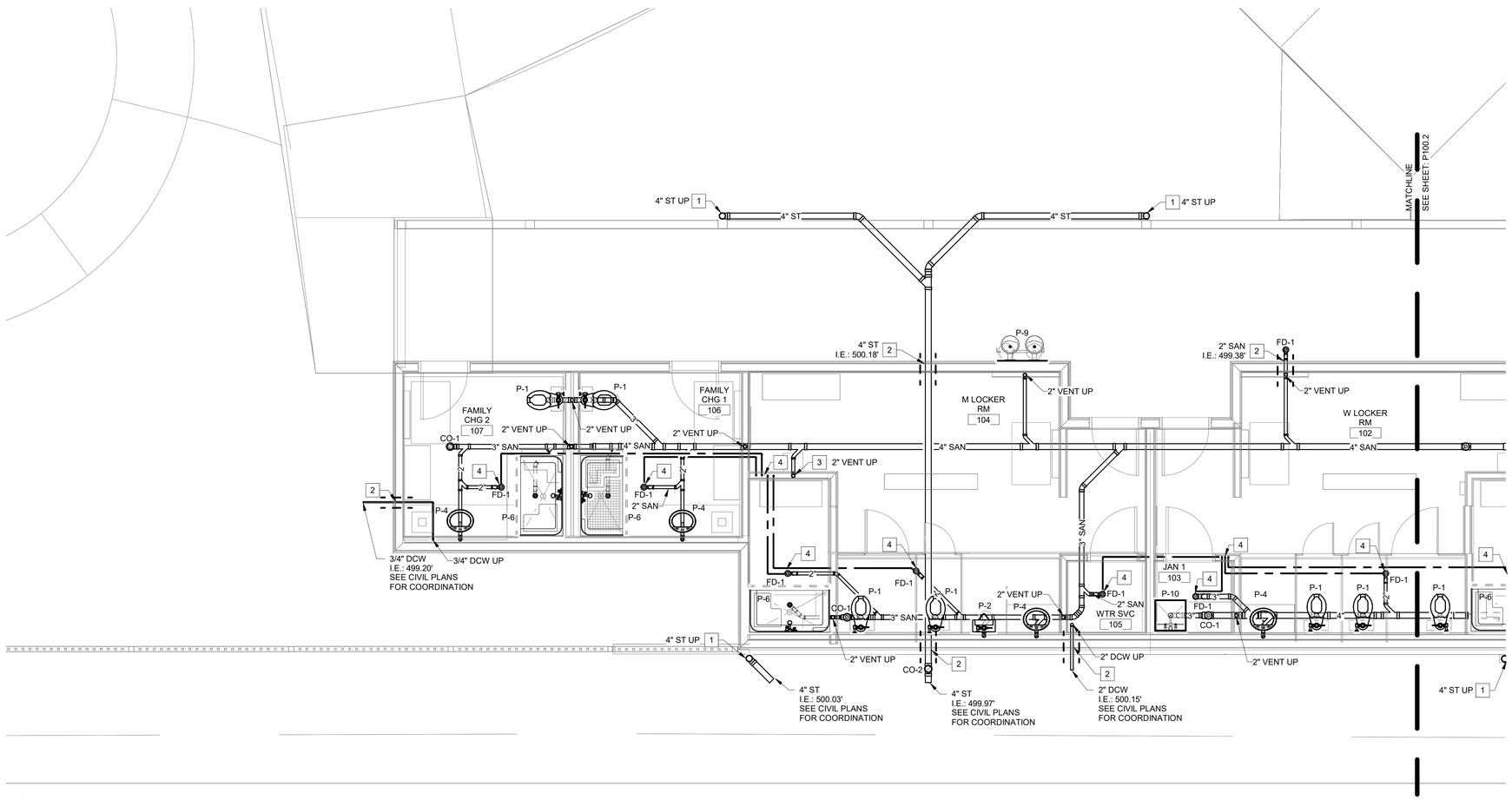

PLUMBING BELOW GRADE PLAN - AREA 'A'

SCALE: 1/4" = 1'-0"

GENERAL NOTES

1 CONTRACTOR IS RESPONSIBLE FOR PLANNING INSTALLATION OF PIPING AND ALL INDICATED DEVICES, COORDINATING AND PROVIDING OPENINGS, SLEEVES, WALL PENETRATIONS, AND EQUIPMENT LOCATIONS PER THEIR MEANS-AND-METHODS AS NECESSARY TO PROVIDE THE DESIGN INDICATED.

2 FOOTINGS AND COLUMN SUPPORTS ARE SHOWN FOR REFERENCE. SEE STRUCTURAL DRAWINGS FOR COORDINATION.

3 EXISTING BELOW GRADE SANITARY PIPING SHOWN IS BASED ON RECORD DRAWINGS. ROUTING MAY VARY FROM ACTUAL FIELD CONDITIONS. CONTRACTOR SHALL VERIFY ROUTING PER THEIR MEANS-AND-METHODS PRIOR TO ANY WORK.

☐ CONSTRUCTION NOTES

1 PROVIDE CAST IRON DOWNSPOUT BOOT WITH INTEGRAL CLEANOUT TO TRANSITION FROM DOWNSPOUT TO BELOW GRADE STORM PIPING. COORDINATE VERTICAL LEADER SIZE WITH ROOF PLAN AND BELOW GRADE PIPING.

2 PROVIDE PIPE SLEEVE AND WATERTIGHT MECHANICAL JOINT SEAL. EXTEND SLEEVE PAST THE FOUNDATION WALL FOOTING IN BOTH DIRECTIONS BEYOND TO THE ZONE OF COMPACTION. SEE DETAIL FOR COORDINATION.

3 2" SAN UP TO SWIMSUIT DRYER. PROVIDE P-TRAP AT CONNECTION TO SWIMSUIT DRYER.

4 INSTALL 2" SANITARY OR SIZE INDICATED AND 1/2" DCW PIPING FROM DRAIN TO TRAP PRIMER ABOVE. SEE DETAIL AND ABOVE GRADE PLANS FOR COORDINATION.

CONNECTION SIZES

MARK	DCW	DHW	SAN/VENT
P-1	1-1/4"	-	3"
P-2	1"	-	2"
P-3	1/2"	1/2"	2"
P-4	1/2"	1/2"	2"
P-5	1/2"	1/2"	2"
P-6	1/2"	1/2"	2"
P-8	1/2"	1/2"	-
P-9	1/2"	-	2"
P-10	3/4"	3/4"	3"
P-11	3/4"	3/4"	3"
P-12	3/4"	3/4"	1-1/2"
P-13	1/2"	-	-
P-14	1/2"	1/2"	2"

DRAWINGS AND DESIGN © 2023 NORMAN SMITH ARCHITECTURE.
DRAWINGS AND SPECIFICATIONS AND THE IDEAS DESIGNS AND ARRANGEMENTS REPRESENTED THEREIN ARE THE EXCLUSIVE PROPERTY OF THE ARCHITECT AND MEP/FP ENGINEER, WITHOUT EXCEPTION, THE PROPERTY OF THE ARCHITECT AND MEP/FP ENGINEER AND MAY NOT BE REPRODUCED, PUBLISHED OR USED IN ANY WAY FOR ANY PURPOSE WHATSOEVER WITHOUT THEIR WRITTEN CONSENT. DRAWINGS AND SPECIFICATIONS MODIFIED BY THE ARCHITECT AND MEP/FP ENGINEER PRIOR TO CONSTRUCTION MAY NOT BE USED FOR CONSTRUCTION PURPOSES UNLESS AUTHORIZED BY WRITTEN AGREEMENT BETWEEN PARTIES.

PLAN REVIEW BEFORE OPENING ELECTRONIC FILES: READ THIS NOTICE.
THE ATTACHED ELECTRONIC FILE IS PROVIDED TO YOU AS A CONVENIENCE. THIS DOCUMENT IS NOT THE OFFICIAL WORK OF THE ARCHITECT AND ENGINEER. THE ELECTRONIC DATA MAY BE SUBJECT TO UNINTENTIONAL ALTERATION. THE ARCHITECT AND ENGINEER ASSUME NO RESPONSIBILITY FOR ANY ALTERATIONS MADE TO THE ORIGINAL DOCUMENT. THE ARCHITECT AND ENGINEER ASSUME NO RESPONSIBILITY FOR DAMAGES, LOSSES, OR EXPENSES RESULTING FROM THE USE OF THE ATTACHED ELECTRONIC DATA. THE ARCHITECT AND ENGINEER MAKE NO REPRESENTATIONS AS TO THE COMPATIBILITY OF THE ATTACHED ELECTRONIC DATA WITH ANY HARDWARE OR SOFTWARE. THE PLAN REVIEW PROCESS IS THE GENERAL CONTRACTOR'S RESPONSIBILITY. THE ARCHITECT AND ENGINEER ASSUME NO RESPONSIBILITY FOR ANY ERRORS, OMISSIONS, OR DEFICIENCIES IN THE PLANS REVIEWED BY THE GENERAL CONTRACTOR, SUBCONTRACTORS, OR SUPPLIERS. THE PLAN REVIEW PROCESS IS INTENDED TO DETECT GENERAL CONFORMANCE WITH THE DESIGN CONCEPT. IT IS NOT INTENDED TO BE A COMPREHENSIVE PROCESS TO DETECT ALL ERRORS, OMISSIONS, OR DEFICIENCIES IN THE PLANS. THE GENERAL CONTRACTOR IS RESPONSIBLE FOR PERFORMING A COMPREHENSIVE PLAN REVIEW PRIOR TO ORDERING MATERIALS OR COMMENCING CONSTRUCTION. THE ARCHITECT AND ENGINEER ASSUME NO RESPONSIBILITY FOR ANY ERRORS, OMISSIONS, OR DEFICIENCIES IN THE PLANS THAT WERE NOT DETECTED DURING THE PLAN REVIEW PROCESS.

IF THESE FILES ARE USED TO VERIFY AS-BUILT CONDITIONS, THE FILES WILL BE OFFICIAL AND GUARANTEED ACCURATE ONLY IF THE ORIGINAL PLOT DATE, SIGNATURE, AND SEAL OF THE ARCHITECT AND ENGINEER ARE PRESENT. IF THE PLOT DATE, SIGNATURE, AND SEAL ARE NOT PRESENT, THE FILES ARE UNOFFICIAL WORK PRODUCT AND MAY CONTAIN ERRORS, OMISSIONS, OR OUTDATED INFORMATION. THE ARCHITECT AND ENGINEER ASSUME NO RESPONSIBILITY FOR DAMAGES, LOSSES, OR EXPENSES RESULTING FROM THE USE OF THESE FILES IN THEIR UNOFFICIAL FORM. THE ARCHITECT AND ENGINEER ASSUME NO RESPONSIBILITY FOR ANY ERRORS, OMISSIONS, OR DEFICIENCIES IN THE FILES THAT WERE NOT DETECTED DURING THE REVIEW PROCESS. THE ARCHITECT AND ENGINEER ASSUME NO RESPONSIBILITY FOR ANY CHANGES MADE TO THE FILES AFTER THEY LEAVE THEIR POSSESSION. THE ARCHITECT AND ENGINEER ASSUME NO RESPONSIBILITY FOR ANY ERRORS, OMISSIONS, OR DEFICIENCIES IN THE FILES THAT OCCUR DURING THE CONVERSION PROCESS TO AN ALTERNATE FORMAT. THE ARCHITECT AND ENGINEER ASSUME NO RESPONSIBILITY FOR ANY ERRORS, OMISSIONS, OR DEFICIENCIES IN THE FILES THAT ARE DISCOVERED AFTER THE FILES HAVE BEEN CONVERTED TO ANOTHER FORMAT.

VERIFY ALL ELECTRICAL AND MECHANICAL REQUIREMENTS WITH ARCHITECT AND ENGINEER. VERIFY ALL DIMENSIONS AND CONDITIONS PRIOR TO CONSTRUCTION. REPORT ANY ERRORS, OMISSIONS, OR CONFLICTS TO THE ARCHITECT AND OWNER'S PROJECT MANAGER. DO NOT SCALE DRAWINGS. ALL DIMENSIONS ARE TO FACE OF STUD UNLESS OTHERWISE INDICATED. ALL EQUIPMENT, FIXTURES, MATERIALS, OR FINISHES NOT SPECIFICALLY NOTED OR SHOWN ARE OUTSIDE THE SCOPE OF WORK. ALL EQUIPMENT, FIXTURES, MATERIALS, OR FINISHES NOT SPECIFICALLY NOTED OR SHOWN ARE TO BE PROVIDED BY OTHERS. ALL EQUIPMENT, FIXTURES, MATERIALS, OR FINISHES TO BE INSTALLED BY OWNER'S CONTRACTORS ARE TO BE COORDINATED WITH THE GENERAL CONTRACTOR. ALL EQUIPMENT, FIXTURES, MATERIALS, OR FINISHES TO BE INSTALLED BY OWNER'S CONTRACTORS ARE OUTSIDE THE SCOPE OF WORK. ALL EQUIPMENT, FIXTURES, MATERIALS, OR FINISHES TO BE INSTALLED BY OWNER'S CONTRACTORS ARE TO BE COORDINATED WITH THE GENERAL CONTRACTOR.

No.	Date	Issue Notes
2	01/3/2024	release for bid
1	12/7/2023	permit subm

Designed By
Drawn By
Checked By
Reviewed By
Submitted By
Project Manager
Date
Release
Plot 23/7/03:culpeper
Drawing Code
CAD File Name
Plot Date

Design Firm
NORMAN SMITH ARCHITECTURE
13411 H Street, Washington, DC 20002-4506
3637 Slate Mills Road, Spernyville, VA 22740
T 202.462.5886 www.normansmitharchitecture.com

Civil/MEP/FP
VALLEY ENGINEERING
4901 Crowe Drive, Mount Crawford, VA 22841
T 540.434.6365 www.valleyesp.com

Project Title
Culpeper County
Community Pool Project
163368 Competition Drive
Culpeper, VA

Sheet Title
PLUMBING BELOW
GRADE PLAN - AREA 'A'

Scale
1/4" = 1'-0"

Sheet No.
P100.1
of

COMMONWEALTH OF VIRGINIA
PHILLIP L. GENTRY
Lic. No. 025757
01/03/2024
PROFESSIONAL ENGINEER

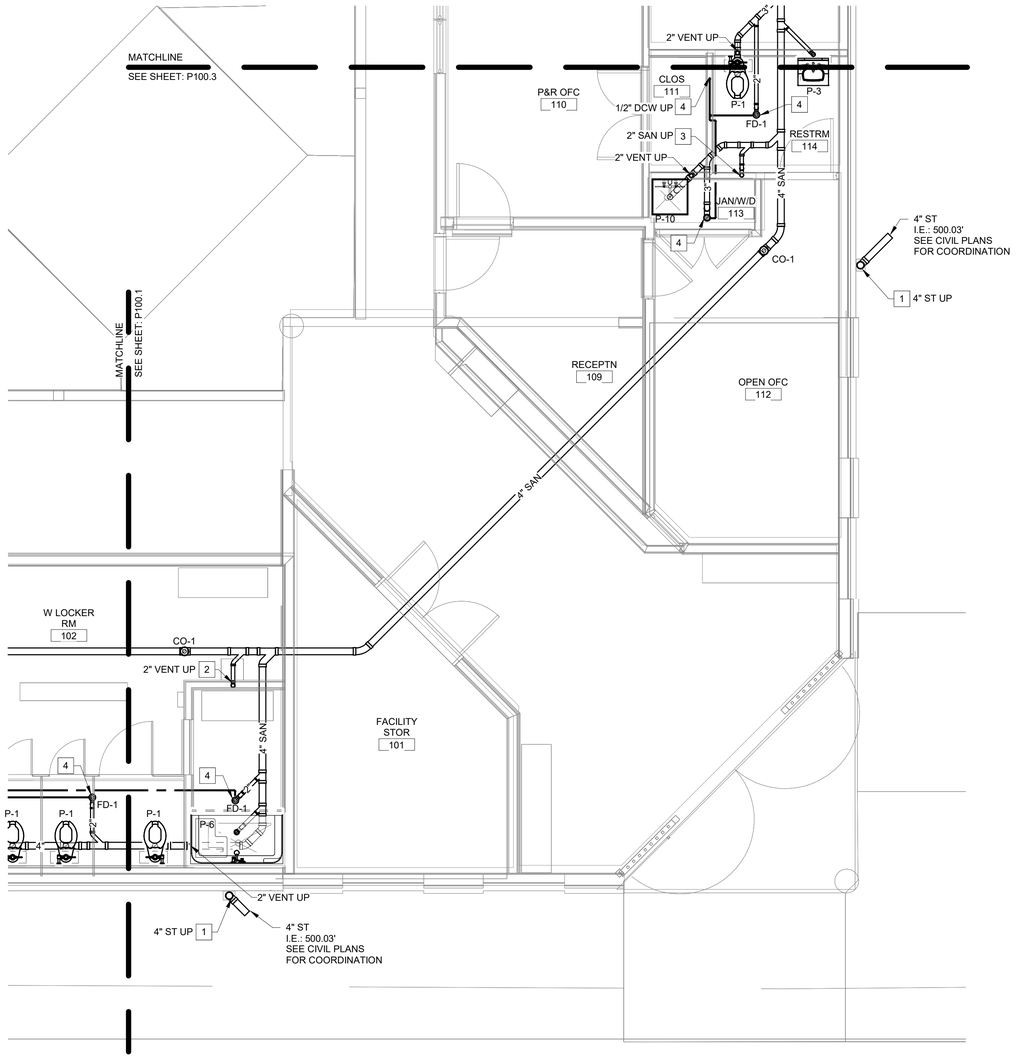

PLUMBING BELOW GRADE PLAN - AREA 'B'

SCALE: 1/4" = 1'-0"

GENERAL NOTES

1 CONTRACTOR IS RESPONSIBLE FOR PLANNING INSTALLATION OF PIPING AND ALL INDICATED DEVICES, COORDINATING AND PROVIDING OPENINGS, SLEEVES, WALL PENETRATIONS, AND EQUIPMENT LOCATIONS PER THEIR MEANS-AND-METHODS AS NECESSARY TO PROVIDE THE DESIGN INDICATED.

2 FOOTINGS AND COLUMN SUPPORTS ARE SHOWN FOR REFERENCE. SEE STRUCTURAL DRAWINGS FOR COORDINATION.

3 EXISTING BELOW GRADE SANITARY PIPING SHOWN IS BASED ON RECORD DRAWINGS. ROUTING MAY VARY FROM ACTUAL FIELD CONDITIONS. CONTRACTOR SHALL VERIFY ROUTING PER THEIR MEANS-AND-METHODS PRIOR TO ANY WORK.

☐ CONSTRUCTION NOTES

1 PROVIDE CAST IRON DOWNSPOUT BOOT WITH INTEGRAL CLEANOUT TO TRANSITION FROM DOWNSPOUT TO BELOW GRADE STORM PIPING. COORDINATE VERTICAL LEADER SIZE WITH ROOF PLAN AND BELOW GRADE PIPING.

2 2" SAN UP TO SWIMSUIT DRYER. PROVIDE P-TRAP AT CONNECTION TO SWIMSUIT DRYER.

3 INSTALL 2" SAN PIPING SERVING CONNECTION BOX ABOVE.

4 INSTALL 2" SANITARY OR SIZE INDICATED AND 1/2" DCW PIPING FROM DRAIN TO TRAP PRIMER ABOVE. SEE DETAIL AND ABOVE GRADE PLANS FOR COORDINATION.

CONNECTION SIZES

MARK	DCW	DHW	SAN/VENT
P-1	1-1/4"	-	3"
P-2	1"	-	2"
P-3	1/2"	1/2"	2"
P-4	1/2"	1/2"	2"
P-5	1/2"	1/2"	2"
P-6	1/2"	1/2"	2"
P-8	1/2"	1/2"	-
P-9	1/2"	-	2"
P-10	3/4"	3/4"	3"
P-11	3/4"	3/4"	3"
P-12	3/4"	3/4"	1-1/2"
P-13	1/2"	-	-
P-14	1/2"	1/2"	2"

PLANS READ BEFORE OPENING ELECTRONIC FILES: READ THIS NOTICE:
DRAWINGS AND DESIGN IS NORMAN SMITH ARCHITECTURE. DRAWINGS AND SPECIFICATIONS AND THE IDEAS DESIGNS AND ARRANGEMENTS REPRESENTED THEREIN ARE THE PROPERTY OF THE ARCHITECT AND PERSONAL WITHOUT EXCEPTION, THE PROPERTY OF THE ARCHITECT AND WERE PREPARED FOR USE ON THIS PROJECT ONLY AND NOT TO BE USED BY CONTRACTOR WHEN PLANNING TO BY ANY OWNER.
THE ARCHITECT HAS ATTEMPTED TO MAKE THE PLANS CONSISTENT WITH THE PROJECT AS THE PLANS WERE PREPARED. THE PLANS MAY NOT REFLECT THE GENERAL DEVIATIONS AND CHANGES MADE DURING CONSTRUCTION. THE ARCHITECT HAS NOT PERFORMED ANY INSPECTIONS TO DETERMINE THE ACCURACY OF THE PLANS AND ASSUMES NO RESPONSIBILITY FOR THE ACCURACY OF THE PLANS.
IF THESE PLANS ARE USED TO REPLACE OR REPAIR A PORTION OF THE PROJECT, THE PLANS MAY NOT REFLECT THE ORIGINAL DESIGN OF THE PROJECT. THE ARCHITECT HAS NOT PERFORMED ANY INSPECTIONS TO DETERMINE THE ACCURACY OF THE PLANS AND ASSUMES NO RESPONSIBILITY FOR THE ACCURACY OF THE PLANS.
IF THESE PLANS ARE USED TO REPLACE OR REPAIR A PORTION OF THE PROJECT, THE PLANS MAY NOT REFLECT THE ORIGINAL DESIGN OF THE PROJECT. THE ARCHITECT HAS NOT PERFORMED ANY INSPECTIONS TO DETERMINE THE ACCURACY OF THE PLANS AND ASSUMES NO RESPONSIBILITY FOR THE ACCURACY OF THE PLANS.

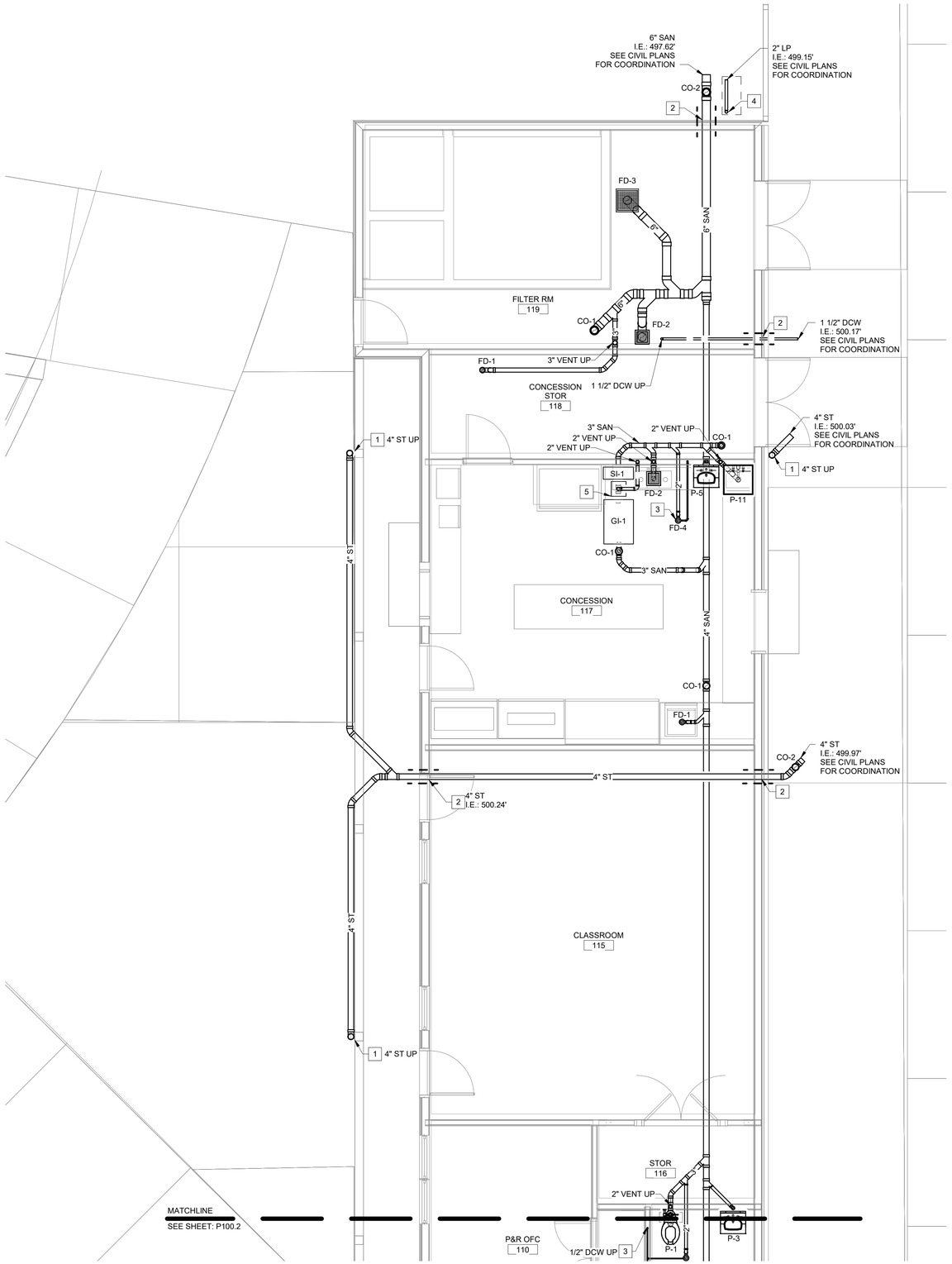

PLUMBING BELOW GRADE PLAN - AREA 'C'

SCALE: 1/4" = 1'-0"

GENERAL NOTES

1 CONTRACTOR IS RESPONSIBLE FOR PLANNING INSTALLATION OF PIPING AND ALL INDICATED DEVICES, COORDINATING AND PROVIDING OPENINGS, SLEEVES, WALL PENETRATIONS, AND EQUIPMENT LOCATIONS PER THEIR MEANS-AND-METHODS AS NECESSARY TO PROVIDE THE DESIGN INDICATED.

2 FOOTINGS AND COLUMN SUPPORTS ARE SHOWN FOR REFERENCE. SEE STRUCTURAL DRAWINGS FOR COORDINATION.

3 EXISTING BELOW GRADE SANITARY PIPING SHOWN IS BASED ON RECORD DRAWINGS. ROUTING MAY VARY FROM ACTUAL FIELD CONDITIONS. CONTRACTOR SHALL VERIFY ROUTING PER THEIR MEANS-AND-METHODS PRIOR TO ANY WORK.

☐ CONSTRUCTION NOTES

1 PROVIDE CAST IRON DOWNSPOUT BOOT WITH INTEGRAL CLEANOUT TO TRANSITION FROM DOWNSPOUT TO BELOW GRADE STORM PIPING. COORDINATE VERTICAL LEADER SIZE WITH ROOF PLAN AND BELOW GRADE PIPING.

2 PROVIDE PIPE SLEEVE AND WATERTIGHT MECHANICAL JOINT SEAL. EXTEND SLEEVE PAST THE FOUNDATION WALL FOOTING IN BOTH DIRECTIONS BEYOND TO THE ZONE OF COMPACTION. SEE DETAIL FOR COORDINATION.

3 INSTALL 2" SANITARY OR SIZE INDICATED AND 1/2" DCW PIPING FROM DRAIN TO TRAP PRIMER ABOVE. SEE DETAIL AND ABOVE GRADE PLANS FOR COORDINATION.

4 PROPANE SERVICE TO THE BUILDING FROM AN EXISTING TANK. PROVIDE GAS REGULATOR AND ASSOCIATED DEVICES PER TYPICAL GAS SERVICE DETAIL. WORK ASSOCIATED WITH THE POOL HEATER SHALL BE PRICED AS AN ADD ALTERNATE.

5 INSTALL FLOW CONTROL FITTING AND VENT PER MANUFACTURER'S INSTALLATION REQUIREMENTS. PROVIDE ACID RESISTANT, WATER TIGHT FLOOR BOX WITH SECURABLE LID TO PROVIDE ACCES TO FLOW CONTROL DEVICE.

CONNECTION SIZES

MARK	DCW	DHW	SAN/VENT
P-1	1-1/4"	-	3"
P-2	1"	-	2"
P-3	1/2"	1/2"	2"
P-4	1/2"	1/2"	2"
P-5	1/2"	1/2"	2"
P-6	1/2"	1/2"	2"
P-8	1/2"	1/2"	-
P-9	1/2"	-	2"
P-10	3/4"	3/4"	3"
P-11	3/4"	3/4"	3"
P-12	3/4"	3/4"	1-1/2"
P-13	1/2"	-	-
P-14	1/2"	1/2"	2"

COMMONWEALTH OF VIRGINIA
PHILLIP L. GENTRY
Lic. No. 025757
01/03/2024
PROFESSIONAL ENGINEER

PLEASE READ BEFORE OPENING ELECTRONIC FILES: WORD PROVIDED.
DRAWINGS AND DESIGN IS NORMAN SMITH ARCHITECTURE.
DRAWINGS AND SPECIFICATIONS AND THE IDEAS, DESIGNS AND ARRANGEMENTS REPRESENTED THEREIN ARE THE PROPERTY OF THE ARCHITECT AND AS AN INSTRUMENT OF PROFESSIONAL SERVICE, ARE TO BE RETURNED UPON REQUEST. THEY ARE NOT TO BE USED BY ANY PERSON FOR ANY PURPOSE OTHER THAN THE PROJECT FOR WHICH THEY WERE PREPARED, NOR ARE THEY TO BE DISCLOSED TO OTHERS WITHOUT THE WRITTEN CONSENT OF THE ARCHITECT. THE ARCHITECT WILL NOT BE RESPONSIBLE FOR ANY MODIFICATIONS MADE TO THE DRAWINGS AND SPECIFICATIONS WITHOUT THE WRITTEN CONSENT OF THE ARCHITECT.
CONTRACTOR SHALL REVIEW, CONFIRM AND ACCEPT IN WRITING THE ACCURACY OF ALL DRAWINGS, DIMENSIONS AND CONDITIONS PRIOR TO THE ISSUANCE OF ANY SUBCONTRACT OR PURCHASE ORDER. THE ARCHITECT IS NOT TO BE HELD RESPONSIBLE FOR ANY ERRORS, OMISSIONS OR DISCREPANCIES REGARDING THE DRAWINGS AND SPECIFICATIONS UNLESS THE ARCHITECT HAS BEEN NOTIFIED IN WRITING WITHIN TWO WEEKS OF THE RECEIPT OF THE DRAWINGS AND SPECIFICATIONS.
IF THERE EXISTS ANY ERROR OR VARIANCE FROM THE DRAWINGS, THE ARCHITECT IS TO BE NOTIFIED IMMEDIATELY. THE ARCHITECT WILL NOT BE RESPONSIBLE FOR ANY ERRORS OR VARIANCE WHICH MAY OCCUR IF THE DRAWINGS ARE NOT USED IN THE ORIGINAL FORMAT.
THE ARCHITECT WILL NOT BE RESPONSIBLE FOR ANY ERRORS OR VARIANCE WHICH MAY OCCUR IF THE DRAWINGS ARE MODIFIED BY OTHERS.
THE ARCHITECT WILL NOT BE RESPONSIBLE FOR ANY ERRORS OR VARIANCE WHICH MAY OCCUR IF THE DRAWINGS ARE USED FOR ANY OTHER PROJECT.
VERIFY ALL ELEVATIONS AND FIELD CONDITIONS PRIOR TO CONSTRUCTION. IN THE EVENT OF ANY DISCREPANCY, NOTIFY THE ARCHITECT IMMEDIATELY. ALL DIMENSIONS TO BE VERIFIED BY CONTRACTOR. ANY VARIANCE BETWEEN ACTUAL AND DRAWN DIMENSIONS.

No.	Date	Issue Notes
2	01/3/2024	release for bid
1	12/7/2023	permit subm

Designed By | Date
Drawn By | Revision
Checked By | Project 23703.culpeper
Reviewed By | Drawing Code
Submitted By | CAD File Name
Project Manager | PLC Date

Design Firm
NORMAN SMITH ARCHITECTURE
1341 H Street, Washington, DC 20002-4806
3637 Slate Mills Road, Spenryville, VA 22740
T 202.462.5886 www.normansmitharchitecture.com

Consultant
VALLEY ENGINEERING
4901 Crowe Drive, Mount Crawford, VA 22841
T 540.434.6365 www.valleyesp.com

Project Title
Culpeper County
Community Pool Project
16388 Competition Drive
Culpeper, VA

Sheet Title
PLUMBING BELOW
GRADE PLAN - AREA 'C'

Scale 1/4" = 1'-0"

Sheet No.
P100.3
of

GENERAL NOTES

1 CONTRACTOR IS RESPONSIBLE FOR PLANNING INSTALLATION OF PIPING AND ALL INDICATED DEVICES, COORDINATING AND PROVIDING OPENINGS, SLEEVES, WALL PENETRATIONS, AND EQUIPMENT LOCATIONS PER THEIR MEANS-AND-METHODS AS NECESSARY TO PROVIDE THE DESIGN INDICATED.

2 ALL VENT PIPING SHALL BE 2" UNLESS NOTED OTHERWISE.

☐ CONSTRUCTION NOTES

1 2" SAN TO SWIMSUIT DRYER. PROVIDE P-TRAP AT CONNECTION TO SWIMSUIT DRYER.

2 3/4" DCW DOWN TO BELOW GRADE TO SITE CONNECTION FOR YARD HYDRANT.

CONNECTION SIZES

MARK	DCW	DHW	SAN/VENT
P-1	1-1/4"	-	3"
P-2	1"	-	2"
P-3	1/2"	1/2"	2"
P-4	1/2"	1/2"	2"
P-5	1/2"	1/2"	2"
P-6	1/2"	1/2"	2"
P-8	1/2"	1/2"	-
P-9	1/2"	-	2"
P-10	3/4"	3/4"	3"
P-11	3/4"	3/4"	3"
P-12	3/4"	3/4"	1-1/2"
P-13	1/2"	-	-
P-14	1/2"	1/2"	2"

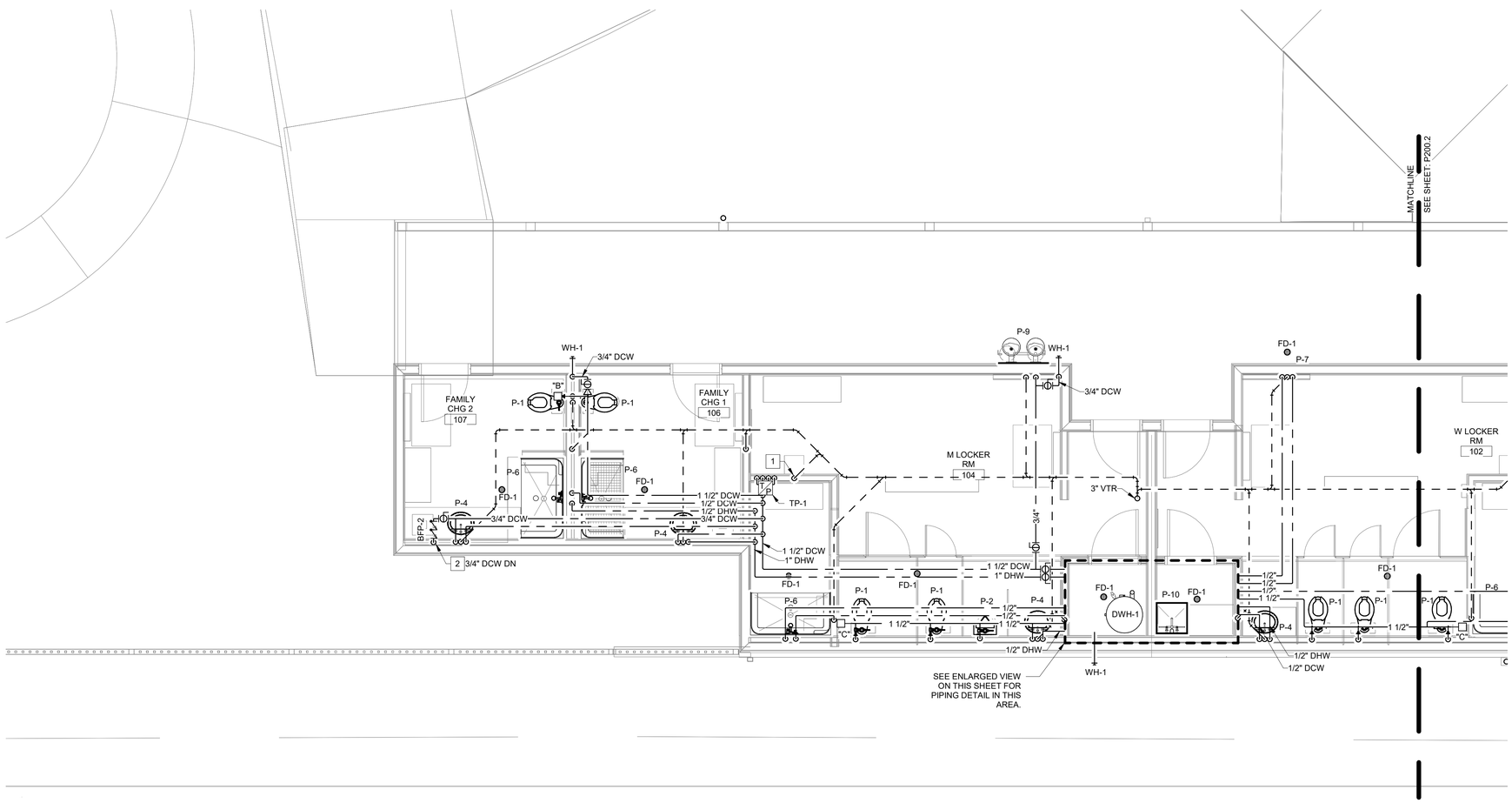

PLUMBING PLAN - AREA 'A'

SCALE: As indicated

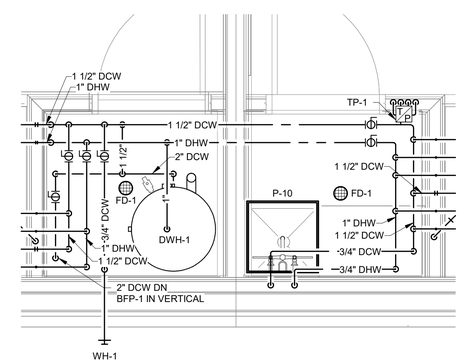

PLUMBING PLAN - ENLARGED VIEW

SCALE: 1/2" = 1'-0"

DRAWINGS AND DESIGN © 2023 NORMAN SMITH ARCHITECTURE.
DRAWINGS AND SPECIFICATIONS AND THE IDEAS DESIGNS AND ARRANGEMENTS REPRESENTED THEREIN ARE THE EXCLUSIVE PROPERTY OF THE ARCHITECT AND PROJECT OWNER, WITHOUT EXCEPTION, THE PROPERTY OF THE ARCHITECT AND MAY NOT BE USED FOR ANY PURPOSE NOT SPECIFICALLY AGREED TO IN CONTRACT BETWEEN PROJECT OWNER AND ARCHITECT.
DRAWINGS MAY NOT BE SCALED OR PHYSICALLY MODIFIED BY THE PROJECT OWNER OR ANY OTHER PARTY.
VERIFY THAT THE DRAWINGS AND SPECIFICATIONS ARE CONSISTENT WITH THE OWNER'S PROJECT REQUIREMENTS, AND THAT THEY ARE GENERALLY OF THE CORRECT AND CURRENT STANDARD OF QUALITY AND COMPLETENESS FOR THE PROJECT INTENDED.
SPECIFICATIONS, ADDENDA, RFIS, CHANGE ORDERS AND OTHER CONTRACT DOCUMENTS TAKE PRECEDENCE OVER DRAWINGS.
VERIFY ALL ELEVATIONS AND FIELD CONDITIONS PRIOR TO CONTINUING WITH WORK. REPORT ANY DISCREPANCIES OR ERRORS IMMEDIATELY TO THE OWNER'S PROJECT MANAGER OR ARCHITECT.
PLEASE READ BEFORE OPENING ELECTRONIC FILES: NORM SMITH ARCHITECTURE, INC. (NSA) HAS PROVIDED THESE DRAWINGS AND SPECIFICATIONS IN THE ELECTRONIC FORMAT REQUESTED BY THE OWNER AND ARCHITECT OF RECORD FOR THE PROJECT. THE OWNER AND ARCHITECT OF RECORD ACKNOWLEDGE THAT THE DRAWINGS AND SPECIFICATIONS PROVIDED ARE THE PROPERTY OF NSA. THE OWNER AND ARCHITECT OF RECORD ACKNOWLEDGE THAT THE DRAWINGS AND SPECIFICATIONS ARE INSTRUMENTS OF SERVICE THROUGH WHICH THE WORK TO BE PERFORMED UNDER THE CONTRACT FOR THE PROJECT IS DESCRIBED. THE PARTIES AGREE TO THE GENERAL DISTRIBUTION AND USE OF THE DRAWINGS AND SPECIFICATIONS IN CONNECTION WITH THE PROJECT, SUBJECT TO THE FOLLOWING LIMITATIONS:
THE DRAWINGS AND SPECIFICATIONS ARE PROVIDED AS AN INSTRUMENT OF SERVICE FOR THE PROJECT AND MAY BE USED FOR INFORMATION, VIEWING, CONSTRUCTION, MAINTENANCE, AND REPAIR OF THE PROJECT. THE PARTIES AGREE THAT THE DRAWINGS AND SPECIFICATIONS WILL NOT BE USED BY THE OWNER OR OTHERS FOR ANY OTHER PROJECT, FOR ADDITIONS TO THE PROJECT, OR FOR COMPLETION OF THE PROJECT BY OTHERS, EXCEPT FOR THE EXISTENCE OF A LICENSE AGREEMENT BETWEEN THE OWNER AND ARCHITECT OF RECORD. THE OWNER AND ARCHITECT OF RECORD ACKNOWLEDGE THAT THE DRAWINGS AND SPECIFICATIONS ARE INTENDED FOR USE ONLY WITH THE PROJECT AND THAT THEY MAY NOT BE SUFFICIENT FOR USE ON OTHER PROJECTS. THE OWNER AND ARCHITECT OF RECORD AGREE TO REMOVE OR DESTROY ALL ELECTRONIC FILES, OR OTHERWISE MAKE THEM UNUSABLE, IF THE PARTIES DETERMINE THAT THE PROJECT WILL NOT BE COMPLETED. THE PARTIES AGREE TO REMOVE OR DESTROY ALL ELECTRONIC FILES, OR OTHERWISE MAKE THEM UNUSABLE, IF THE PROJECT IS COMPLETED, AND THE OWNER AND ARCHITECT OF RECORD AGREE TO EQUIPMENT INSTALLED IN ACCORDANCE WITH THE PROJECT DOCUMENTS. THE PARTIES AGREE TO REMOVE OR DESTROY ALL ELECTRONIC FILES, OR OTHERWISE MAKE THEM UNUSABLE, IF THE PROJECT IS NOT COMPLETED WITHIN 60 DAYS OF THE DATE OF THE ARCHITECT OF RECORD'S LAST SUBMITTAL OF THE FILES TO THE OWNER.

No.	Date	Revision Notes	Zone	Appr

No.	Date	Issue Notes
2	01/3/2024	release for bid
1	12/7/2023	permit subm

Date
Revision
Plot 23/7/3:culpeper
Drawing Code
CAD File Name
Plot Date

Designed By
Drawn By
Checked By
Reviewed By
Submitted By
Project Manager

Design Firm
NORMAN SMITH ARCHITECTURE
1341 H Street, Washington, DC 20002-4506
3637 Slate Mills Road, Spernyville, VA 22740
T 202.462.5886 www.normansmitharchitecture.com

Consultant
VALLEY ENGINEERING
4901 Crove Drive, Mount Crawford, VA 22841
T 540.434.6365 www.valleyesp.com

Project Title
Culpeper County
Community Pool Project
163368 Competition Drive
Culpeper, VA

Sheet Title
PLUMBING PLAN - AREA 'A'

Scale
As indicated

Sheet No.
P200.1
of

COMMONWEALTH OF VIRGINIA
PHILLIP L. GENTRY
Lic. No. 025757
01/03/2024
PROFESSIONAL ENGINEER

GENERAL NOTES

1 CONTRACTOR IS RESPONSIBLE FOR PLANNING INSTALLATION OF PIPING AND ALL INDICATED DEVICES, COORDINATING AND PROVIDING OPENINGS, SLEEVES, WALL PENETRATIONS, AND EQUIPMENT LOCATIONS PER THEIR MEANS-AND-METHODS AS NECESSARY TO PROVIDE THE DESIGN INDICATED.

2 ALL VENT PIPING SHALL BE 2" UNLESS NOTED OTHERWISE.

☐ CONSTRUCTION NOTES

1 2" SAN TO SWIMSUIT DRYER. PROVIDE P-TRAP AT CONNECTION TO SWIMSUIT DRYER.

CONNECTION SIZES

MARK	DCW	DHW	SAN/VENT
P-1	1-1/4"	-	3"
P-2	1"	-	2"
P-3	1/2"	1/2"	2"
P-4	1/2"	1/2"	2"
P-5	1/2"	1/2"	2"
P-6	1/2"	1/2"	2"
P-8	1/2"	1/2"	-
P-9	1/2"	-	2"
P-10	3/4"	3/4"	3"
P-11	3/4"	3/4"	3"
P-12	3/4"	3/4"	1-1/2"
P-13	1/2"	-	-
P-14	1/2"	1/2"	2"

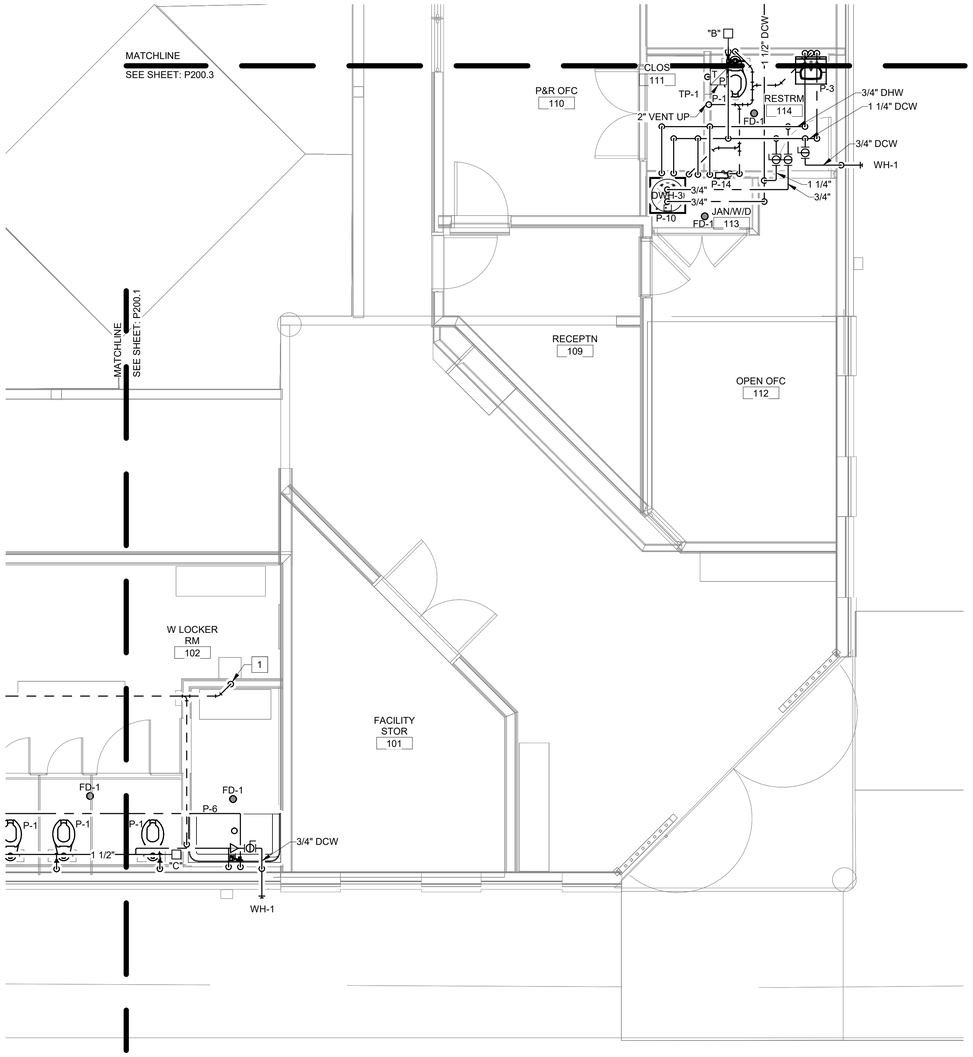

PLUMBING PLAN - AREA 'B'

SCALE: 1/4" = 1'-0"

PLANS READ BEFORE DRAWING ELECTRONICAL FILES WERE PROVIDED.

DRAWINGS AND DESIGN © 2023 NORMAN SMITH ARCHITECTURE.
DRAWINGS AND SPECIFICATIONS AND THE IDEAS DESIGNS AND ARRANGEMENTS REPRESENTED THEREIN ARE THE EXCLUSIVE PROPERTY OF THE ARCHITECT AND PROFESSIONAL ENGINEERS, WITHOUT EXCEPTION, THE PROPERTY OF THE ARCHITECT AND PROFESSIONAL ENGINEERS. THEY ARE TO BE RETURNED UPON REQUEST. THEY ARE NOT TO BE REPRODUCED, CHANGED OR COPIED IN ANY FORM OR MANNER WHATSOEVER, NOR ARE THEY TO BE ASSIGNED TO ANY THIRD PARTY, WITHOUT FIRST OBTAINING THE WRITTEN PERMISSION OF THE ARCHITECT AND PROFESSIONAL ENGINEERS. THEY ARE TO BE USED FOR THE PROJECT AND SITE NAMED PROPOSED, AND NOT TO BE USED FOR ANY OTHER PROJECT OR ON ANY OTHER SITE UNLESS EXPRESSLY AGREED TO IN WRITING BY THE ARCHITECT AND PROFESSIONAL ENGINEERS. ALL PERSONS AGREE TO GUARD AND HOLD THE ARCHITECT AND PROFESSIONAL ENGINEERS HARMLESS FROM ANY AND ALL EXPENSES AND LOSSES ARISING FROM ANY VIOLATION OF THE FOREGOING RESTRICTIONS.

CONTRACTOR TO VERIFY ALL DIMENSIONS, QUANTITIES AND CONDITIONS OF THE WORK AND THE SUITABILITY OF THE GROUNDS AND BUILDINGS FOR THE INTENDED USE BEFORE PROCEEDING WITH THE WORK. ANY ERRORS, OMISSIONS, OR DISCREPANCIES IN THE DRAWINGS OR SPECIFICATIONS SHALL BE REPORTED TO THE ARCHITECT AND PROFESSIONAL ENGINEERS PRIOR TO THE COMMENCEMENT OF WORK. THE ARCHITECT AND PROFESSIONAL ENGINEERS ARE NOT RESPONSIBLE FOR ANY ERRORS, OMISSIONS, OR DISCREPANCIES CONTAINED IN THE DRAWINGS OR SPECIFICATIONS WHICH HAVE BEEN ALTERED OR REPRODUCED IN ANY FORM OR MANNER WHATSOEVER OR ANY ERRORS, OMISSIONS, OR DISCREPANCIES WHICH ARE NOT REPORTED TO THE ARCHITECT AND PROFESSIONAL ENGINEERS PRIOR TO COMMENCEMENT OF WORK.

IF WRITTEN DIMENSIONS ARE NOT SHOWN ON THE DRAWINGS, THE ARCHITECT AND PROFESSIONAL ENGINEERS WILL PROVIDE DIMENSIONS ON REQUEST. DRAWINGS MAY BE SCALED FOR PERMIT, ESTIMATING, AND INFORMATION PURPOSES. DIMENSIONS MUST BE VERIFIED AND AGREED UPON BY CONTRACTOR BEFORE FABRICATION OF ANY ITEM. ANY ITEM FABRICATED BY THE CONTRACTOR OR SUBCONTRACTOR PRIOR TO ARCHITECT AND PROFESSIONAL ENGINEERS REVIEW AND APPROVAL IS AT THE CONTRACTOR'S OR SUBCONTRACTOR'S RISK AND MAY BE REJECTED BY THE ARCHITECT AND PROFESSIONAL ENGINEERS.

IF WRITTEN DIMENSIONS ARE NOT SHOWN ON THE DRAWINGS, THE ARCHITECT AND PROFESSIONAL ENGINEERS WILL PROVIDE DIMENSIONS ON REQUEST. DRAWINGS MAY BE SCALED FOR PERMIT, ESTIMATING, AND INFORMATION PURPOSES. DIMENSIONS MUST BE VERIFIED AND AGREED UPON BY CONTRACTOR BEFORE FABRICATION OF ANY ITEM. ANY ITEM FABRICATED BY THE CONTRACTOR OR SUBCONTRACTOR PRIOR TO ARCHITECT AND PROFESSIONAL ENGINEERS REVIEW AND APPROVAL IS AT THE CONTRACTOR'S OR SUBCONTRACTOR'S RISK AND MAY BE REJECTED BY THE ARCHITECT AND PROFESSIONAL ENGINEERS.

VERIFY ALL ELEVATIONS AND FIELD CONDITIONS PRIOR TO CONSTRUCTION. ANY DISCREPANCIES MUST BE REPORTED TO THE ARCHITECT AND PROFESSIONAL ENGINEERS. OWNER'S PROJECT MANAGER OF ANY VARIANCE BETWEEN FACTUAL AND DRAWN CONDITIONS.

No.	Date	Issue Notes
2	01/3/2024	release for bid
1	12/7/2023	permit subm

No.	Date	Revision Notes	Zone	Appr

Date
Revision
Plotted 23/7/3:culpeper
Drawing Code
CAD File Name
Plot Date

Designed By
Drawn By
Checked By
Reviewed By
Submitted By
Project Manager

Design Firm
NORMAN SMITH ARCHITECTURE
13414 H Street, Washington, DC 20002-4506
3637 Slate Mills Road, Spenryville, VA 22740
T 202.462.5586 www.normansmitharchitecture.com

Civil/Struct
VALLEY ENGINEERING
4901 Crove Drive, Mount Crawford, VA 22841
T 540.434.6365 www.valleyesp.com

Project Title
Culpeper County
Community Pool Project
163588 Competition Drive
Culpeper, VA

Sheet Title
PLUMBING PLAN - AREA 'B'

Scale
1/4" = 1'-0"

Sheet No.
P200.2
of

COMMONWEALTH OF VIRGINIA
PHILLIP L. GENTRY
Lic. No. 025757
01/03/2024
PROFESSIONAL ENGINEER

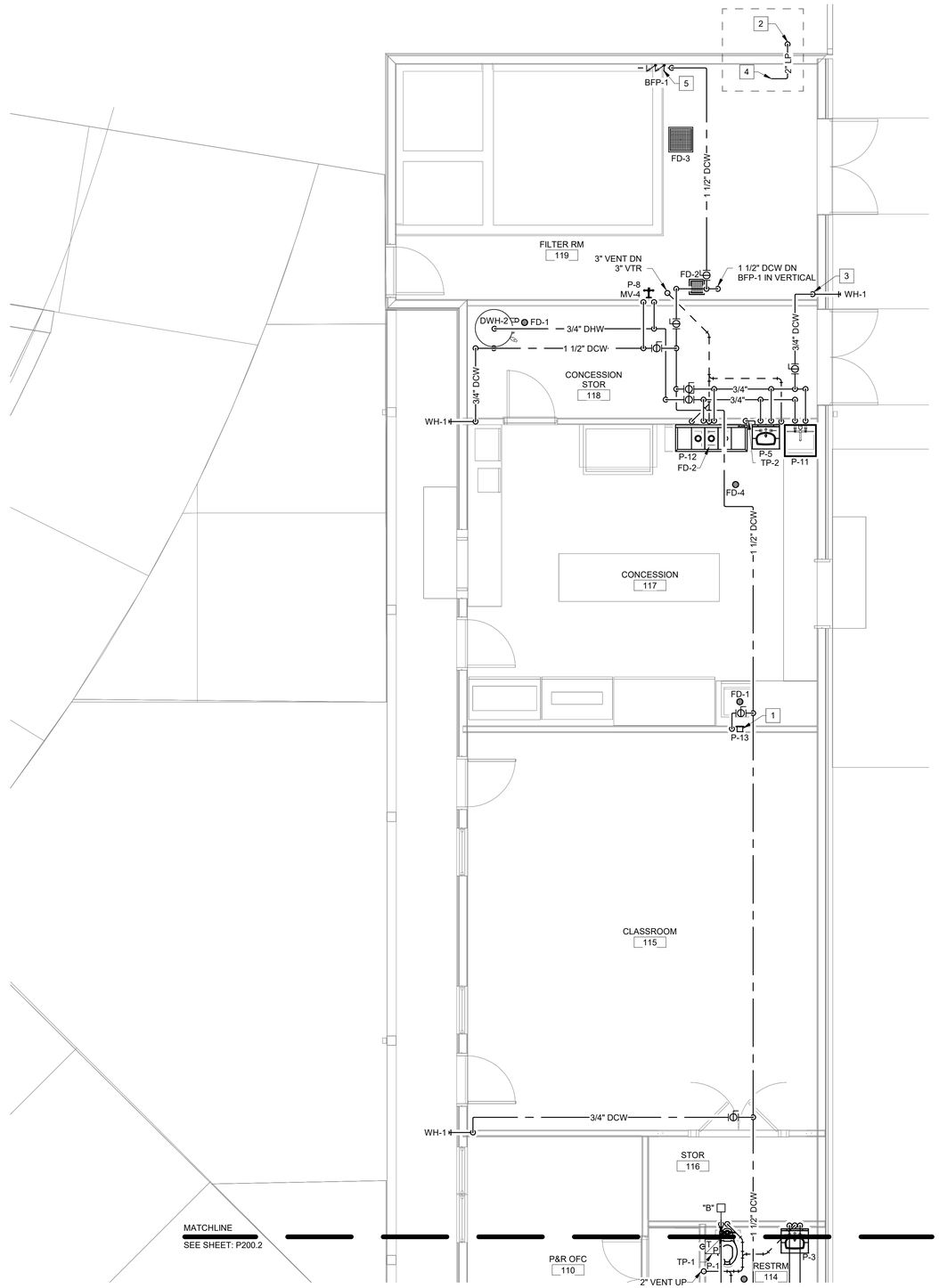

PLUMBING PLAN - AREA 'C'

SCALE: 1/4" = 1'-0"

GENERAL NOTES

1 CONTRACTOR IS RESPONSIBLE FOR PLANNING INSTALLATION OF PIPING AND ALL INDICATED DEVICES, COORDINATING AND PROVIDING OPENINGS, SLEEVES, WALL PENETRATIONS, AND EQUIPMENT LOCATIONS PER THEIR MEANS-AND-METHODS AS NECESSARY TO PROVIDE THE DESIGN INDICATED.

2 ALL VENT PIPING SHALL BE 2" UNLESS NOTED OTHERWISE.

☐ CONSTRUCTION NOTES

1 PROVIDE C-PURE OCEANLOCH-M WATER FILTER. COORDINATE WITH ICE MACHINE MANUFACTURER'S INSTALLATION INSTRUCTIONS.

2 PROPANE SERVICE TO THE BUILDING FROM AN EXISTING TANK. PROVIDE GAS REGULATOR AND ASSOCIATED DEVICES PER TYPICAL GAS SERVICE DETAIL. WORK ASSOCIATED WITH THE POOL HEATER SHALL BE PRICED AS AN ADD ALTERNATE.

3 INSTALL EXPOSED 3/4" VERTICAL DCW PIPE SERVING WALL HYDRANT

4 PROVIDE GAS REGULATOR, ISOLATION VALVE, AND DIRT LEG PER TYPICAL GAS CONNECTION DETAIL. WORK ASSOCIATED WITH THE POOL HEATER SHALL BE PRICED AS AN ADD ALTERNATE.

5 PROVIDE 1-1/2" DCW CONNECTION TO POOL EQUIPMENT. PROVIDE BACKFLOW PREVENTER, BFP-1, ISOLATION VALVE, AND PIPE UNION. COORDINATE FINAL CONNECTION WITH POOL EQUIPMENT SUPPLIER.

CONNECTION SIZES

MARK	DCW	DHW	SAN/VENT
P-1	1-1/4"	-	3"
P-2	1"	-	2"
P-3	1/2"	1/2"	2"
P-4	1/2"	1/2"	2"
P-5	1/2"	1/2"	2"
P-6	1/2"	1/2"	2"
P-8	1/2"	1/2"	-
P-9	1/2"	-	2"
P-10	3/4"	3/4"	3"
P-11	3/4"	3/4"	3"
P-12	3/4"	3/4"	1-1/2"
P-13	1/2"	-	-
P-14	1/2"	1/2"	2"

DRAWINGS AND DESIGN © 2023 NORMAN SMITH ARCHITECTURE.
DRAWINGS AND SPECIFICATIONS AND THE IDEAS DESIGNS AND ARRANGEMENTS REPRESENTED THEREIN ARE THE EXCLUSIVE PROPERTY OF THE ARCHITECT AND REMAIN, WITHOUT EXCEPTION, THE PROPERTY OF THE ARCHITECT AND MAY NOT BE USED FOR ANY PURPOSE NOT SPECIFICALLY AGREED TO IN WRITING BY THE ARCHITECT.
CONTRACTOR SHALL VERIFY ALL DIMENSIONS AND CONDITIONS PRIOR TO CONSTRUCTION. DRAWINGS NOT TO BE SCALED. DRAWINGS NOT GENERALLY MODIFIED BY THE ENGINEER SHALL BE CONSIDERED ACCEPTABLE.
VERIFY THAT THE LAYOUT SHOWN IS ADEQUATE FOR THE EQUIPMENT TO BE INSTALLED. ADVISE ARCHITECT OF ANY PROBLEMS PRIOR TO CONSTRUCTION.
VERIFY THAT THE ITEMS SHOWN ARE COMPATIBLE WITH THE EQUIPMENT TO BE INSTALLED. ADVISE ARCHITECT OF ANY PROBLEMS PRIOR TO CONSTRUCTION.
SPECIFICATIONS, ADDENDA, RFIS, CHANGE ORDERS AND OTHER CONTRACT DOCUMENTS TAKE PRECEDENCE OVER DRAWINGS. DO NOT SCALE DRAWINGS.
VERIFY ALL EXISTING AND FIELD CONDITIONS PRIOR TO CONTRACTING WITH OWNER'S PROJECT MANAGER OF ANY VARIANCE BETWEEN ACTUAL AND DRAWN CONDITIONS.

PLAN REVIEW STAMP (WHEN ELECTRONICALLY FILED, WHEN PRINTED)
THE ENGINEER OR ARCHITECT WHOSE SEAL AND SIGNATURE APPEAR ON THIS DOCUMENT, HAS EXERCISED RESPONSIBLE CHARGE OVER THE DESIGN OF THE PROJECT AS DEFINED IN THE STATE OF VIRGINIA PROFESSIONAL PRACTICE ACT AND ASSOCIATED REGULATIONS. THE ENGINEER OR ARCHITECT MAY RELY ON THE WORK OF OTHER PROFESSIONALS WHO ARE EXPERTS IN THE SUBJECT MATTER OF THEIR WORK. THE ENGINEER OR ARCHITECT IS RESPONSIBLE FOR GENERAL DISTRIBUTION OF WORK AMONG THE PROFESSIONALS WHO WORK ON THE PROJECT AND FOR REVIEW OF THE WORK OF THE OTHER PROFESSIONALS AS IT RELATES TO THE OVERALL DESIGN OF THE PROJECT.
IF THIS FOLDER IS USED TO REVIEW A PORTION OF THE PROJECT, THE ENGINEER OR ARCHITECT WHOSE SEAL AND SIGNATURE APPEAR ON THE COVER SHEET OF THIS DOCUMENT, HAS EXERCISED RESPONSIBLE CHARGE OVER THE DESIGN OF THE PORTION OF THE PROJECT AS DEFINED IN THE STATE OF VIRGINIA PROFESSIONAL PRACTICE ACT AND ASSOCIATED REGULATIONS.

No.	Date	Revision Notes	Zone	Appr

No.	Date	Issue Notes
2	01/3/2024	release for bid
1	12/7/2023	permit subm

Designed By
Drawn By
Checked By
Reviewed By
Released By
Submitted By
Project Manager
Date
Release
Project 23703.culpeper
Drawing Code
CAD File Name
Plot Date

Design Firm
NORMAN SMITH ARCHITECTURE
1341 H Street, Washington, DC 20002-4906
3637 State Mills Road, Sperryville, VA 22740
T 202.462.5886 www.normansmitharchitecture.com
Consultant
VALLEY ENGINEERING
4991 Crowe Drive, Mount Crawford, VA 22841
T 540.434.6365 www.valleyesp.com

Project Title
Culpeper County
Community Pool Project
163368 Competition Drive
Culpeper, VA

Sheet Title
PLUMBING PLAN - AREA 'C'

Scale
1/4" = 1'-0"

Sheet No.
P200.3
—— of ——

COMMONWEALTH OF VIRGINIA
PHILIP L. GENTRY
Lic. No. 025757
01/03/2024
PROFESSIONAL ENGINEER

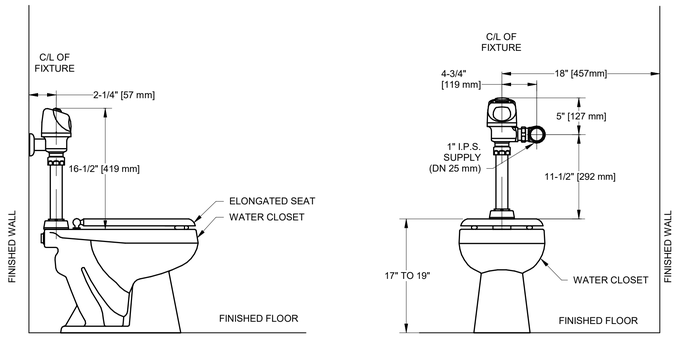

ADA WATER CLOSET

NOT TO SCALE

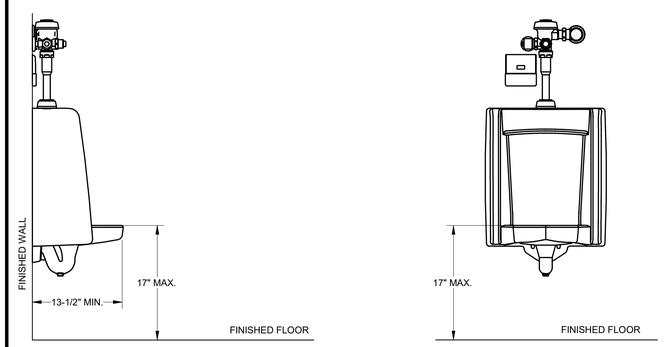

SIDE VIEW

FRONT VIEW

ADA WALL MOUNT URINAL

NOT TO SCALE

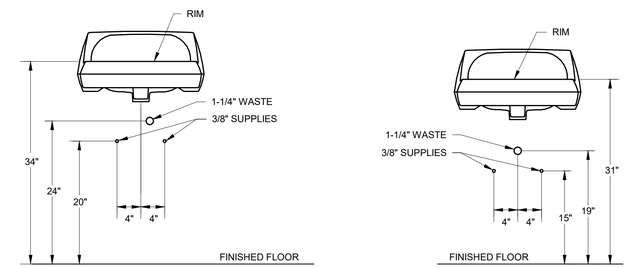

ADA CLEARANCE

STANDARD CLEARANCE

WALL MOUNT LAVATORY ROUGH-IN

NOT TO SCALE

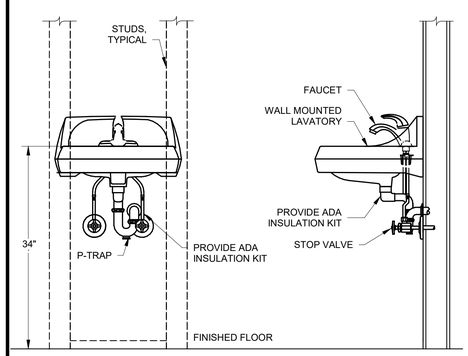

FRONT VIEW

SIDE VIEW

NOTES:

1. LAVATORY SUPPORT NOT SHOWN.
2. PIPE INSULATION NOT SHOWN.
3. USE CHROME PLATED COMPONENTS WHERE POSSIBLE OUTSIDE OF WALL.

STAFF LAVATORY

4

NOT TO SCALE

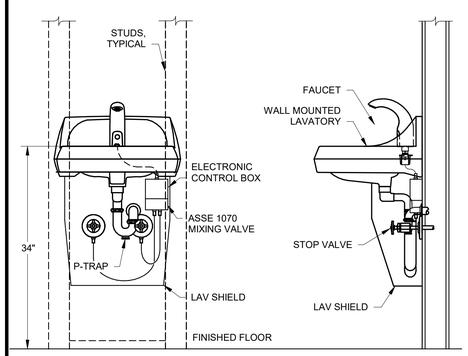

FRONT VIEW

SIDE VIEW

NOTES:

1. LAVATORY SUPPORT NOT SHOWN.
2. PIPE INSULATION NOT SHOWN.
3. USE CHROME PLATED COMPONENTS WHERE POSSIBLE OUTSIDE OF WALL.

PUBLIC LAVATORY

4

NOT TO SCALE

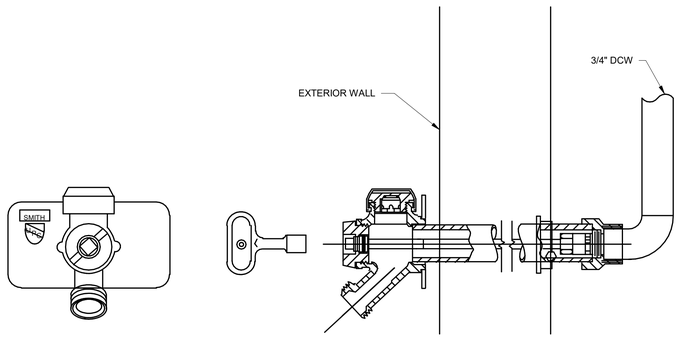

FRONT VIEW

SIDE VIEW

NOTE:
CONTRACTOR SHALL COORDINATE HEIGHT WITH EXTERIOR GRADE

WALL HYDRANT DETAIL

NOT TO SCALE

COMMONWEALTH OF VIRGINIA
PHILLIP L. GENTRY
Lic. No. 025757
03/29/2024
PROFESSIONAL ENGINEER

PLANS PRIOR BEFORE OPENING ELECTRONIC FILES: READ THIS NOTICE.
DRAWINGS AND DESIGN: © 2023 NORMAN SMITH ARCHITECTURE. THIS DRAWING AND SPECIFICATION AND THE ADA DESIGNS AND DRAWINGS CONTAINED THEREIN ARE THE PROPERTY OF THE ARCHITECT AND MAY BE USED ONLY FOR THE PROJECT SPECIFIED HEREIN. THE ARCHITECT RETAINS ALL COPYRIGHTS, PATENT RIGHTS AND OTHER PROPRIETARY RIGHTS IN THE DRAWINGS AND DESIGNS. THE DRAWINGS AND DESIGNS MAY NOT BE REPRODUCED OR DISTRIBUTED TO OTHERS WITHOUT THE ARCHITECT'S PRIOR WRITTEN CONSENT.
DRAWINGS AND SPECIFICATIONS: THE DRAWINGS AND SPECIFICATIONS CONSTITUTE THE ARCHITECT'S INSTRUMENTS OF SERVICE. THE ARCHITECT WILL GRANT A NON-EXCLUSIVE LICENSE TO THE OWNER FOR THE PROJECT SPECIFIED HEREIN, PROVIDED THE OWNER AGREES TO THE ARCHITECT'S TERMS AND CONDITIONS. THE ARCHITECT'S LICENSE TO THE OWNER AUTHORIZES THE OWNER TO USE AND REPRODUCE THE DRAWINGS AND SPECIFICATIONS FOR THE PROJECT SPECIFIED HEREIN, SUBJECT TO THE GENERAL DISTINCTIVE CHARACTER OF THE DESIGN, SUBJECT TO THE ARCHITECT'S RIGHTS, AND SUBJECT TO THE OWNER'S OBLIGATION TO PAY THE ARCHITECT THE COMPENSATION DUE UNDER THE AGREEMENT. THE ARCHITECT'S LICENSE TO THE OWNER DOES NOT AUTHORIZE THE OWNER TO USE, REPRODUCE OR DISTRIBUTE THE DRAWINGS AND SPECIFICATIONS FOR ANY PROJECT OTHER THAN THE PROJECT SPECIFIED HEREIN. THE ARCHITECT'S LICENSE TO THE OWNER DOES NOT INCLUDE THE RIGHT TO GRANT SUBLICENSES OR TRANSFER THE LICENSE TO OTHERS.
IF THESE PLANS ARE USED IN ORDER AND OPERATING PREPARATION, THE PLANS ARE OFFICIAL AND GOVERNMENT AND/OR OTHER REGULATORY AGENCIES MAY REQUIRE THEM TO BE SEALED. THE ARCHITECT WILL NOT BE RESPONSIBLE FOR ANY ERRORS OR OMISSIONS IN THE PLANS THAT ARE NOT SEALED. THE ARCHITECT WILL NOT BE RESPONSIBLE FOR ANY ERRORS OR OMISSIONS IN THE PLANS THAT ARE SEALED BY OTHERS.
DISCLAIMER: THE ARCHITECT WILL NOT BE RESPONSIBLE FOR ANY ERRORS OR OMISSIONS IN THE DRAWINGS AND SPECIFICATIONS THAT ARE NOT CAUSED BY THE ARCHITECT'S OWN ACTIVITIES. THE ARCHITECT WILL NOT BE RESPONSIBLE FOR ANY ERRORS OR OMISSIONS IN THE DRAWINGS AND SPECIFICATIONS THAT ARE CAUSED BY THE ACTIVITIES OF ANY OTHER PERSON OR ENTITY, INCLUDING WITHOUT LIMITATION, ANY CONSULTANT, CONTRACTOR, SUBCONTRACTOR, SUPPLIER, OR OWNER'S REPRESENTATIVE. THE ARCHITECT WILL NOT BE RESPONSIBLE FOR ANY ERRORS OR OMISSIONS IN THE DRAWINGS AND SPECIFICATIONS THAT ARE CAUSED BY THE ACTIVITIES OF ANY OTHER PERSON OR ENTITY, INCLUDING WITHOUT LIMITATION, ANY CONSULTANT, CONTRACTOR, SUBCONTRACTOR, SUPPLIER, OR OWNER'S REPRESENTATIVE.
DRAWINGS AND SPECIFICATIONS: THE DRAWINGS AND SPECIFICATIONS CONSTITUTE THE ARCHITECT'S INSTRUMENTS OF SERVICE. THE ARCHITECT WILL GRANT A NON-EXCLUSIVE LICENSE TO THE OWNER FOR THE PROJECT SPECIFIED HEREIN, PROVIDED THE OWNER AGREES TO THE ARCHITECT'S TERMS AND CONDITIONS. THE ARCHITECT'S LICENSE TO THE OWNER AUTHORIZES THE OWNER TO USE AND REPRODUCE THE DRAWINGS AND SPECIFICATIONS FOR THE PROJECT SPECIFIED HEREIN, SUBJECT TO THE GENERAL DISTINCTIVE CHARACTER OF THE DESIGN, SUBJECT TO THE ARCHITECT'S RIGHTS, AND SUBJECT TO THE OWNER'S OBLIGATION TO PAY THE ARCHITECT THE COMPENSATION DUE UNDER THE AGREEMENT. THE ARCHITECT'S LICENSE TO THE OWNER DOES NOT AUTHORIZE THE OWNER TO USE, REPRODUCE OR DISTRIBUTE THE DRAWINGS AND SPECIFICATIONS FOR ANY PROJECT OTHER THAN THE PROJECT SPECIFIED HEREIN. THE ARCHITECT'S LICENSE TO THE OWNER DOES NOT INCLUDE THE RIGHT TO GRANT SUBLICENSES OR TRANSFER THE LICENSE TO OTHERS.
VERIFY: ALL ELEVATIONS AND FIELD CONDITIONS PRIOR TO CONSTRUCTION. IF THE WORK DESCRIBED HEREIN IS NOT ACCEPTABLE, NOTIFY THE ARCHITECT OR OWNER'S PROJECT MANAGER OF ANY VARIANCE BETWEEN ACTUAL AND DRAWINGS/SPECS.

No.	Date	Revision Notes	Zone	Appr
4	3/29/24	rebid revisions		

No.	Date	Issue Notes
2	01/3/2024	release for bid
1	12/7/2023	permit subm

Designed By: | Date: | Revision:
Drawn By: | Project: 23703.culpeper
Checked By: | Drawing Date:
Reviewed By: | CAD File Name:
Submitted By: | Plot Date:
Project Manager:

Design Firm: NORMAN SMITH ARCHITECTURE
1341 H Street, Washington, DC 20002-4906
3637 Slate Mills Road, Sperryville, VA 22740
T 202.462.5888 www.normansmitharchitecture.com

Consultant: VALLEY ENGINEERING
4991 Crowe Drive, Mount Crawford, VA 22841
T 540.434.6365 www.valleyesp.com

Project Title: Culpeper County Community Pool Project
16388 Competition Drive
Culpeper, VA

Sheet Title: PLUMBING DETAILS

Scale: NTS

Sheet No.: P500.1

of

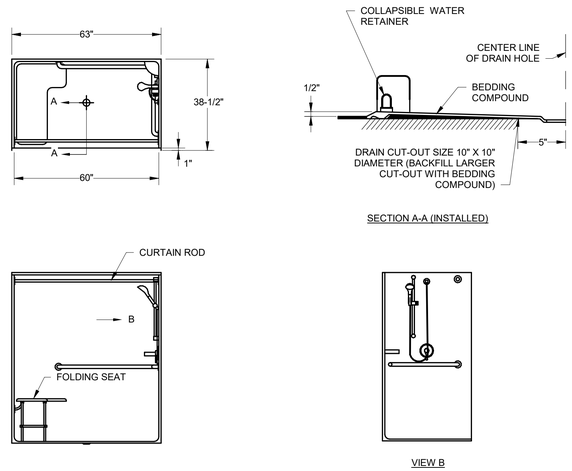

ADA SHOWER INSTALLATION DETAIL

NOT TO SCALE

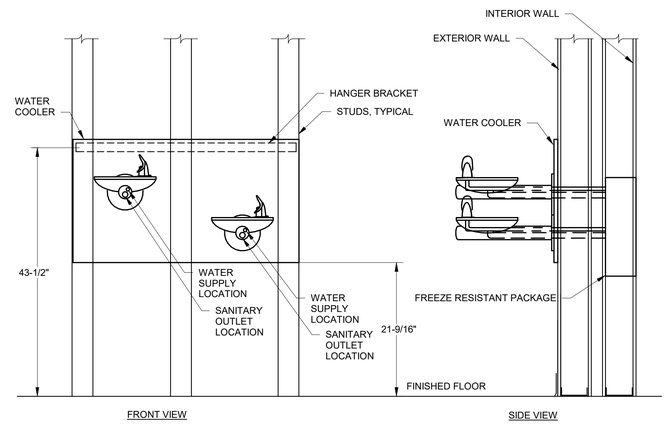

NOTES:

CONTRACTOR SHALL VERIFY DIMENSIONS FROM ROUGH IN DATA SHEETS AND SCHEDULED MOUNTING HEIGHTS

ADA WATER FOUNTAIN INSTALLATION DETAIL

NOT TO SCALE

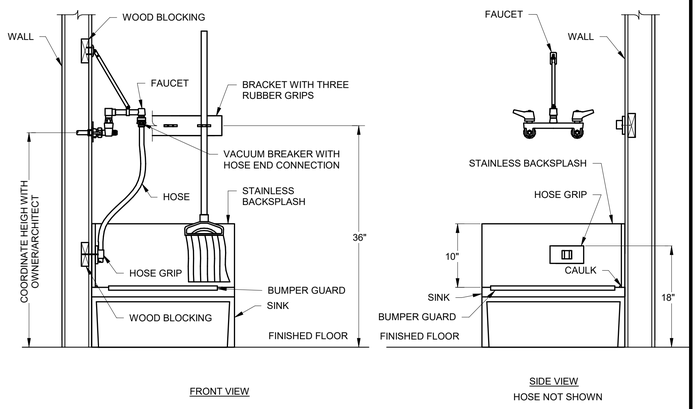

MOP SINK INSTALLATION DETAIL

NOT TO SCALE

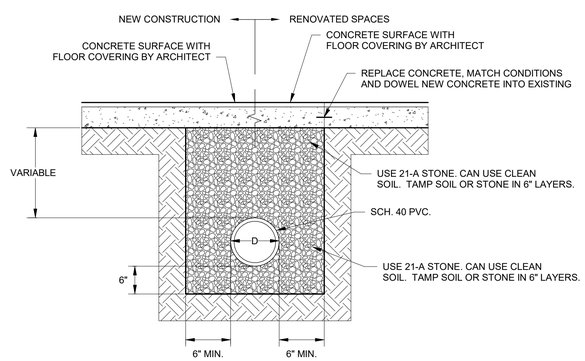

INSIDE PIPE BEDDING DETAIL

NOT TO SCALE

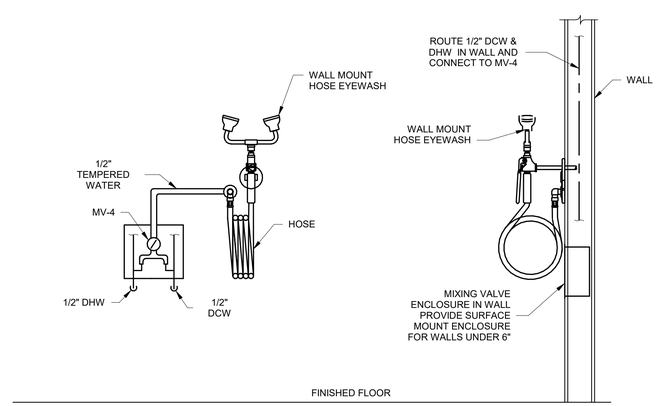

WALL MOUNT HOSE EYEWASH WITH MIXING VALVE DETAIL

NOT TO SCALE

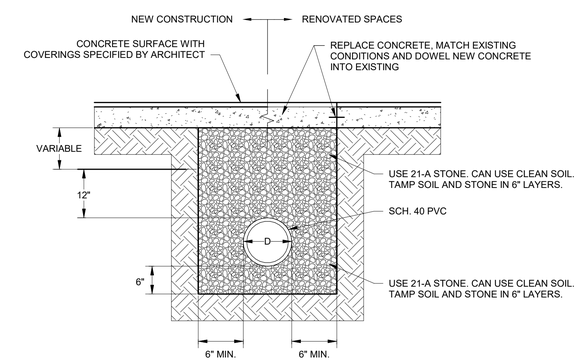

NOTE:

FOR OUTDOOR PIPING IN LOCATION BELOW SURFACES OTHER THAN CONCRETE OR ASPHALT, PROVIDE 6" (MIN.) TOP SOIL COVER.

OUTSIDE PIPE BEDDING DETAIL

NOT TO SCALE

COMMONWEALTH OF VIRGINIA
PHILLIP L. GENTRY
Lic. No. 025757
01/03/2024
PROFESSIONAL ENGINEER

PLEASE READ BEFORE OPENING ELECTRONIC FILES: NORM SMITH

DRAWINGS AND DESIGN © 2023 NORMAN SMITH ARCHITECTURE.
DRAWINGS AND SPECIFICATIONS AND THE ADA DESIGNS AND DOCUMENTS, AS AN INSTRUMENT OF SERVICE, IS THE PROPERTY OF THE ARCHITECT AND REMAIN, WITHOUT EXCEPTION, THE PROPERTY OF THE ARCHITECT AND SHALL NOT BE USED BY ANY PERSON OR ENTITY FOR ANY PURPOSE OTHER THAN THE PROJECT SPECIFICALLY CONTRACTED FOR BY THE OWNER. THE DRAWINGS AND SPECIFICATIONS MAY NOT BE REPRODUCED, CHANGED OR PLACED IN DIGITAL FORMAT WITHOUT THE WRITTEN CONSENT OF THE ARCHITECT, AND ANY REPRODUCTION OR CHANGE WITHOUT WRITTEN CONSENT IS PROHIBITED. THE ARCHITECT DISCLAIMS ALL LIABILITY FOR ANY CHANGES MADE TO THE DRAWINGS AND SPECIFICATIONS WITHOUT THE WRITTEN CONSENT OF THE ARCHITECT.

IF THESE FILES ARE USED TO GENERATE PRINTED DRAWINGS, THE FILES ARE OFFICIAL AND GENUINE AND CONTAIN THE ARCHITECT'S SEAL AND DIGITAL SIGNATURE. THE ARCHITECT DISCLAIMS ALL LIABILITY FOR ANY CHANGES MADE TO THE DRAWINGS AND SPECIFICATIONS WITHOUT THE WRITTEN CONSENT OF THE ARCHITECT. THE ARCHITECT DISCLAIMS ALL LIABILITY FOR ANY CHANGES MADE TO THE DRAWINGS AND SPECIFICATIONS WITHOUT THE WRITTEN CONSENT OF THE ARCHITECT. THE ARCHITECT DISCLAIMS ALL LIABILITY FOR ANY CHANGES MADE TO THE DRAWINGS AND SPECIFICATIONS WITHOUT THE WRITTEN CONSENT OF THE ARCHITECT. THE ARCHITECT DISCLAIMS ALL LIABILITY FOR ANY CHANGES MADE TO THE DRAWINGS AND SPECIFICATIONS WITHOUT THE WRITTEN CONSENT OF THE ARCHITECT.

VERIFY ALL ELEVATIONS AND FIELD CONDITIONS PRIOR TO CONSTRUCTION. ALL DIMENSIONS MUST BE VERIFIED ON THE JOB BY THE CONTRACTOR PRIOR TO ORDERING MATERIALS OR STARTING WORK. ALL DRAWINGS, SPECIFICATIONS, ADDENDA, RFIS, CHANGE ORDERS AND OTHER DOCUMENTS MUST BE SIGNED AND SEALED BY THE ARCHITECT TO BE VALID AND ENFORCEABLE. OWNER'S PROJECT MANAGER OF ANY VARIANCE BETWEEN ACTUAL AND DRAWINGS.

No.	Date	Issue Notes	Zone	Appr
2	01/3/2024	release for bid		
1	12/7/2023	permit subm		

Designed By: Date
Drawn By: Revision
Checked By: Project 23703.culpeper
Reviewed By: Drawing Code
Submitted By: CAD File Name
Project Manager: Plot Date

Design Firm: NORMAN SMITH ARCHITECTURE
1341 H Street, Washington, DC 20002-4906
3637 State Mills Road, Sperryville, VA 22740
T 202.462.5886 www.normansmitharchitecture.com

Consultant: VALLEY ENGINEERING
4991 Crowe Drive, Mount Crawford, VA 22841
T 540.434.6365 www.valleyesp.com

Project Title: Culpeper County Community Pool Project
163883 Competition Drive
Culpeper, VA

Sheet Title: PLUMBING DETAILS

Scale: NTS

Sheet No.: P500.2

of

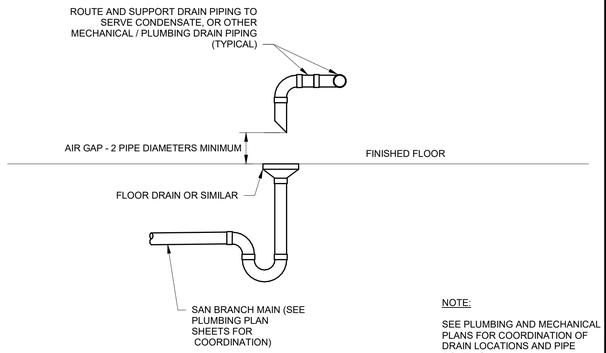

NOTE:

SEE PLUMBING AND MECHANICAL PLANS FOR COORDINATION OF DRAIN LOCATIONS AND PIPE ROUTING

INDIRECT WASTE CONNECTION DETAIL

NOT TO SCALE

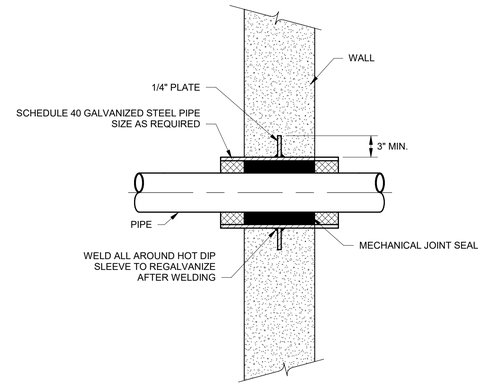

NOTE:

NON-INSULATED PIPE AND CONDUIT WITH WP MEMBRANE.

PIPE SLEEVE THRU FOUNDATION WALL

NOT TO SCALE

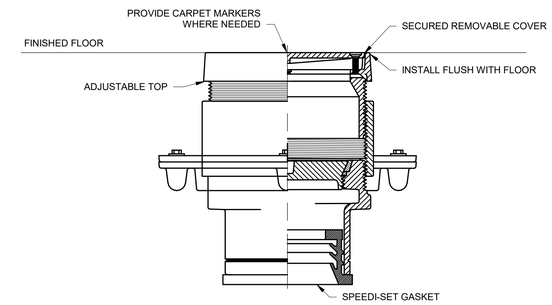

CO-1 SEE SCHEDULE FOR DETAILS

NOT TO SCALE

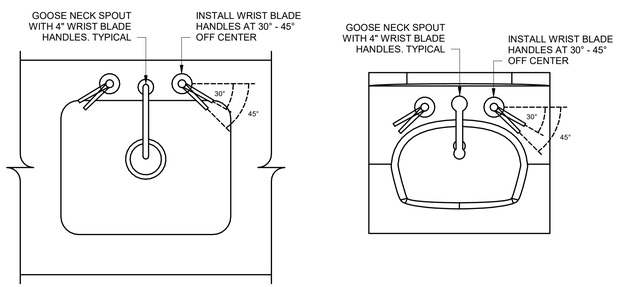

NOTES:

1. TYPICAL FOR ALL ADA SINKS AND LAVATORIES.
2. HANDLE ORIENTATION SHOWN IS FOR FULLY OFF POSITION.

ADA FAUCET INSTALLATION DETAIL

NOT TO SCALE

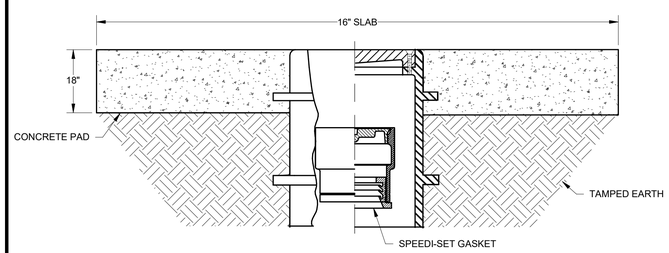

CO-2 SEE SCHEDULE FOR DETAILS

NOT TO SCALE

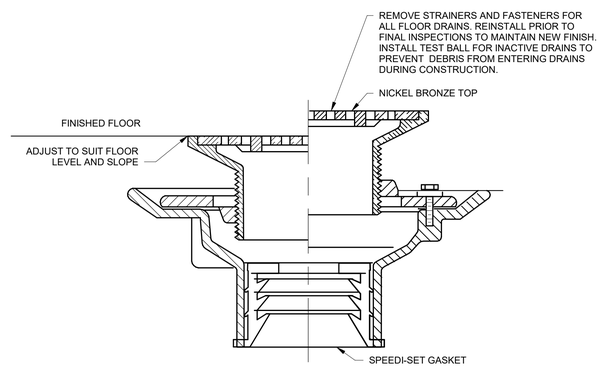

FD-1 SEE SCHEDULE FOR DETAILS

NOT TO SCALE

COMMONWEALTH OF VIRGINIA
PHILLIP L. GENTRY
Lic. No. 025757
01/03/2024
PROFESSIONAL ENGINEER

PLANS MUST BEAR ORIGINAL ELECTRONIC FILES WHEN PROVIDED.

DRAWINGS AND DESIGN © 2023 NORMAN SMITH ARCHITECTURE. DRAWINGS AND SPECIFICATIONS AND THE IDEAS DESIGNS AND ARRANGEMENTS REPRESENTED THEREBY ARE THE EXCLUSIVE PROPERTY OF THE ARCHITECT AND PROFESSIONAL ENGINEERS AND WERE CREATED, EVOLVED AND DEVELOPED FOR USE IN CONNECTION WITH THE SPECIFIED PROJECT. NO OTHER USE OR USE BY OTHERS IS PERMITTED WITHOUT THE WRITTEN CONSENT OF THE ARCHITECT AND ENGINEERS AND MAY NOT BE REPRODUCED, CHANGED OR MODIFIED BY THE OWNER OR ANY OTHER PERSON OR ENTITY WITHOUT THE WRITTEN CONSENT OF THE ARCHITECT AND ENGINEERS, EXCEPT AS STATED BELOW. THE PLANS AND SPECIFICATIONS ARE INTENDED TO BE GENERAL DESCRIPTIONS OF WORK TO BE PERFORMED. THE PLANS AND SPECIFICATIONS DO NOT INCLUDE ALL OF THE MATERIALS NECESSARY TO CARRY OUT THE WORK ENTIRELY AND ARE DEPENDENT UPON THE SUBCONTRACTORS AND TRADES TO PROVIDE THE NECESSARY MATERIALS AND EQUIPMENT TO COMPLETE THE WORK IN ACCORDANCE WITH THE INTENT OF THE DOCUMENTS. THE PLANS AND SPECIFICATIONS ARE NOT INTENDED TO BE A WARRANTY OF EVERY DETAIL OF CONSTRUCTION. THE CONTRACTORS AND TRADES ARE EXPECTED TO PERFORM THE WORK IN A GOOD AND WORKMANLIKE MANNER. IF THESE PLANS ARE USED FOR BIDDING OR PERMITTING PURPOSES, THE PLANS ARE OFFICIAL AND GOVERNMENT AND/OR PROJECT SPECIFICATIONS MAY REQUIRE ADDITIONAL INFORMATION TO BE PROVIDED BY THE CONTRACTORS AND TRADES. THE PLANS AND SPECIFICATIONS ARE NOT INTENDED TO BE A COMPLETE SET OF PLANS AND SPECIFICATIONS FOR CONSTRUCTION PURPOSES UNLESS OTHERWISE STATED. THE CONTRACTORS AND TRADES ARE EXPECTED TO PROVIDE ALL NECESSARY INFORMATION TO COMPLETE THE WORK IN ACCORDANCE WITH THE INTENT OF THE DOCUMENTS. THE CONTRACTORS AND TRADES ARE EXPECTED TO VERIFY ALL ELEVATIONS, DIMENSIONS, SPACE CHANGES, ORDERS AND OTHER SPECIFICATIONS, ADDENDA, SITE CHANGE ORDERS AND OTHER INFORMATION PRIOR TO THE START OF WORK AND TO NOTIFY THE ARCHITECT OF ANY DISCREPANCIES OR CONFLICTS. THE CONTRACTORS AND TRADES ARE EXPECTED TO VERIFY ALL ELEVATIONS AND FIELD CONDITIONS PRIOR TO CONTRACTING WITH THE OWNER. THE CONTRACTORS AND TRADES ARE EXPECTED TO NOTIFY THE OWNER'S PROJECT MANAGER OF ANY VARIANCE BETWEEN ACTUAL AND DRAWN CONDITIONS.

No.	Date	Revision Notes	Zone	Appr
2	01/3/2024	release for bid		
1	12/7/2023	permit subm		

Issue Notes

Date
Revisions
Designed By
Drawn By
Checked By
Reviewed By
Submitted By
Project Manager
Plot 23703.culpeper
Drawing Code
CAD File Name
Plot Date

Design Firm
NORMAN SMITH ARCHITECTURE
1341 H Street, Washington, DC 20002-4906
3637 State Mills Road, Sperryville, VA 22740
T 202.462.5886 www.normansmitharchitecture.com

Consultant
VALLEY ENGINEERING
4991 Crowe Drive, Mount Crawford, VA 22841
T 540.434.6365 www.valleyesp.com

Project Title
Culpeper County
Community Pool Project
163863 Competition Drive
Culpeper, VA

Sheet Title
PLUMBING DETAILS

Scale
NTS

Sheet No.
P500.3
of

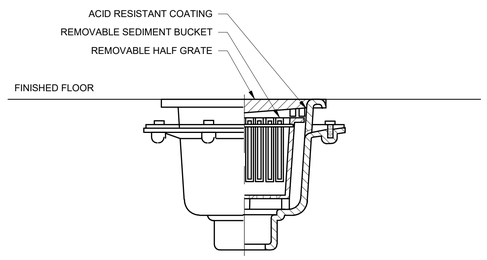

FD-2, FD-3 SEE SCHEDULE FOR DETAILS

NOT TO SCALE

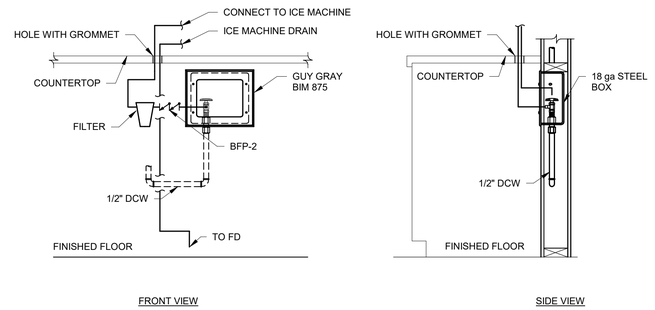

FRONT VIEW

SIDE VIEW

ICE MACHINE CONNECTION DETAIL

NOT TO SCALE

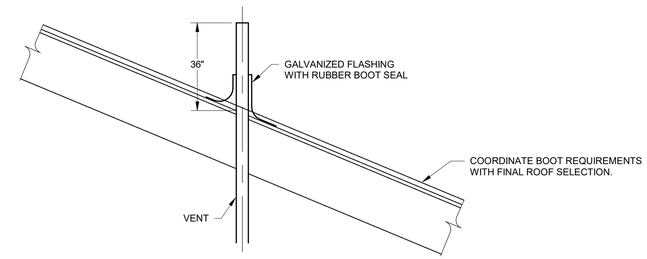

NOTE:

MECHANICAL CONTRACTOR COORDINATE ALL ROOF PENETRATION ACCESSORIES WITH ROOFER.

VENT THRU ROOF DETAIL

NOT TO SCALE

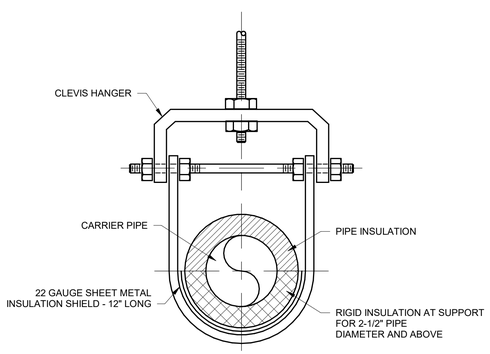

PIPE HANGER DETAIL FOR ALL INSULATED PIPING

NOT TO SCALE

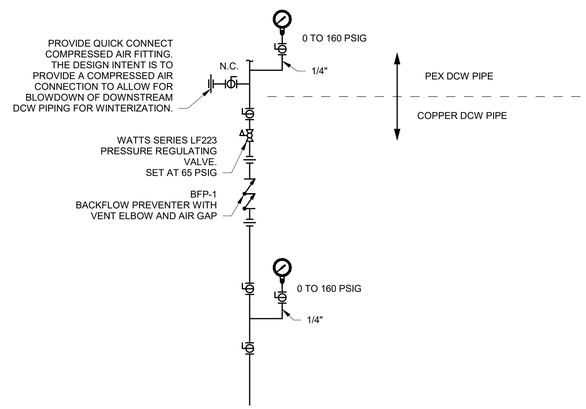

NOTE:

VERIFY EXISTING WATER PRESSURE
WITH LOCAL WATER SERVICE
PROVIDER
SEE PLAN SHEETS FOR PIPE SIZES

INCOMING WATER DETAIL

NOT TO SCALE

NOTES:

1. BASIS OF DESIGN: JAY R SMITH 4910 CLEANOUT. EQUIVALENT DEVICES MEETING THE PERFORMANCE CRITERIA BY ZURN, WATTS, OR JOSAM ARE ACCEPTABLE.

2. LOAD RATING: CLASS C

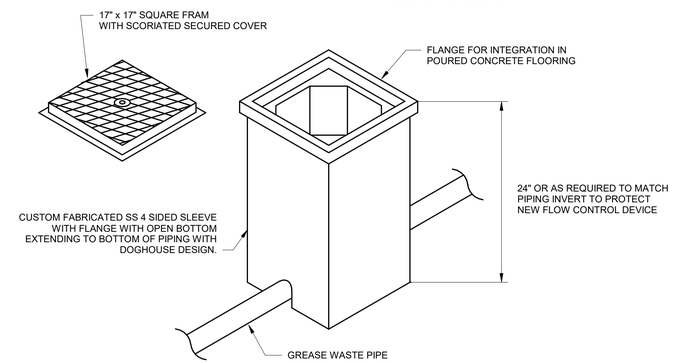

GI FLOW CONTROL DEVICE HOUSING DETAIL

NOT TO SCALE

COMMONWEALTH OF VIRGINIA
PHILLIP L. GENTRY
Lic. No. 025757
01/03/2024
PROFESSIONAL ENGINEER

PLANS PREPARED UNDER ELECTRONIC FILES: WHEN PROVIDED:

DRAWINGS AND DESIGN © 2024 NORMAN SMITH ARCHITECTURE. DRAWINGS AND SPECIFICATIONS AND THE IDEAS DESIGNS AND ARRANGEMENTS REPRESENTED THEREIN ARE THE EXCLUSIVE PROPERTY OF THE ARCHITECT AND PROFESSIONAL ENGINEERS AND WERE CREATED, EVOLVED AND DEVELOPED FOR USE ON AND IN CONNECTION WITH THE SPECIFIED PROJECT. NONE OF THE FOREGOING MAY BE DISCLOSED TO OTHERS OR USED FOR ANY PURPOSE OR IN OTHER PROJECTS EXCEPT PURSUANT TO A WRITTEN AGREEMENT WITH THE ARCHITECT AND PROFESSIONAL ENGINEERS. ALL RIGHTS ARE RESERVED.

THE CONTRACTOR SHALL VERIFY ALL DIMENSIONS, DATA AND CONDITIONS PRIOR TO CONSTRUCTION. ANY ERRORS, OMISSIONS, OR DISCREPANCIES IN THE DRAWINGS AND SPECIFICATIONS SHALL BE REPORTED TO THE ARCHITECT AND PROFESSIONAL ENGINEERS PRIOR TO CONSTRUCTION. ANY WORK DONE AFTER THE DISCOVERY OF SUCH ERRORS, OMISSIONS, OR DISCREPANCIES SHALL BE DONE AT THE CONTRACTOR'S RISK UNLESS THE ARCHITECT AND PROFESSIONAL ENGINEERS HAVE BEEN NOTIFIED AND HAVE GIVEN WRITTEN APPROVAL TO PROCEED.

IF THESE PLANS ARE USED FOR BIDDING OR PERMITTING PURPOSES, THE PLANS SHALL BE CONSIDERED AS INCOMPLETE UNLESS THE ARCHITECT AND PROFESSIONAL ENGINEERS HAVE BEEN NOTIFIED AND HAVE GIVEN WRITTEN APPROVAL TO PROCEED. THE ARCHITECT AND PROFESSIONAL ENGINEERS ASSUME NO RESPONSIBILITY FOR COMPLETENESS OF THE PLANS IF USED FOR BIDDING OR PERMITTING PURPOSES WITHOUT WRITTEN APPROVAL TO PROCEED.

VERIFY ALL ELECTRICAL AND MECHANICAL CONDITIONS, DIMENSIONS, AND CONDITIONS WITH OWNER'S PROJECT MANAGER OF ANY VARIANCE BETWEEN ACTUAL AND DRAWINGS/DOCS.

No.	Date	Revision Notes	Zone	Appr
2	01/3/2024	release for bid		
1	12/7/2023	permit subm		

Issue Notes

Designed By: | Date
Drawn By: | Revision
Checked By: | Plot Date: 23/03/;culpeper
Reviewed By: | Drawing Color
Submitted By: | CAD File Name
Project Manager | Plot Date

Design Firm
NORMAN SMITH ARCHITECTURE
1341 H Street, Washington, DC 20002-4906
3637 State Mills Road, Sperryville, VA 22740
T 202.462.5886 www.normansmitharchitecture.com

Consultant
VALLEY ENGINEERING
4991 Crowe Drive, Mount Crawford, VA 22841
T 540.434.6365 www.valleyesp.com

Project Title
Culpeper County
Community Pool Project
16388 Competition Drive
Culpeper, VA

Sheet Title
PLUMBING DETAILS

Scale
NTS

Sheet No.
P500.4
of

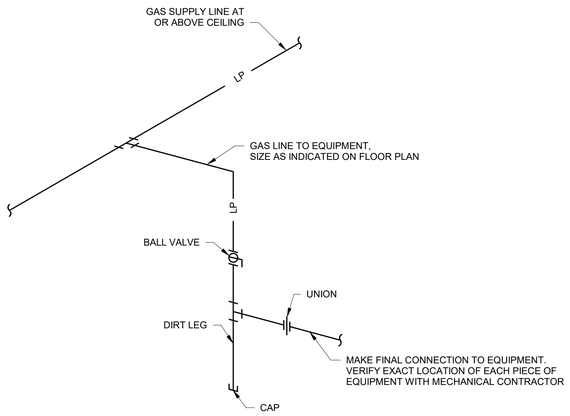

TYPICAL GAS CONNECTION DETAIL

NOT TO SCALE

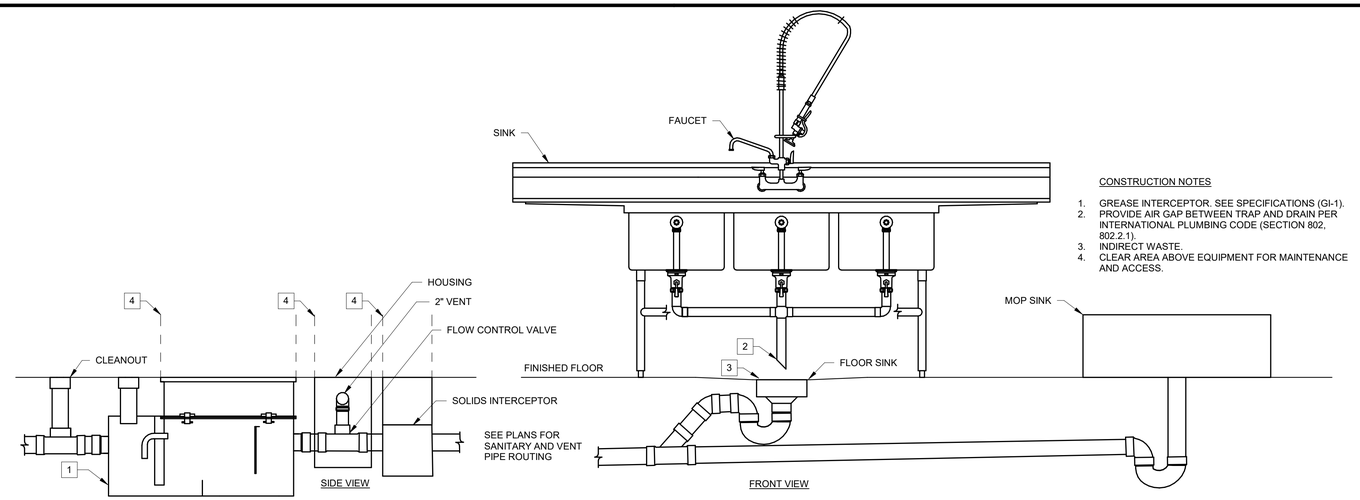

CONSTRUCTION NOTES

1. GREASE INTERCEPTOR. SEE SPECIFICATIONS (GI-1).
2. PROVIDE AIR GAP BETWEEN TRAP AND DRAIN PER INTERNATIONAL PLUMBING CODE (SECTION 802, 802.2.1).
3. INDIRECT WASTE.
4. CLEAR AREA ABOVE EQUIPMENT FOR MAINTENANCE AND ACCESS.

GREASE INTERCEPTOR INSTALLATION DETAIL

NOT TO SCALE

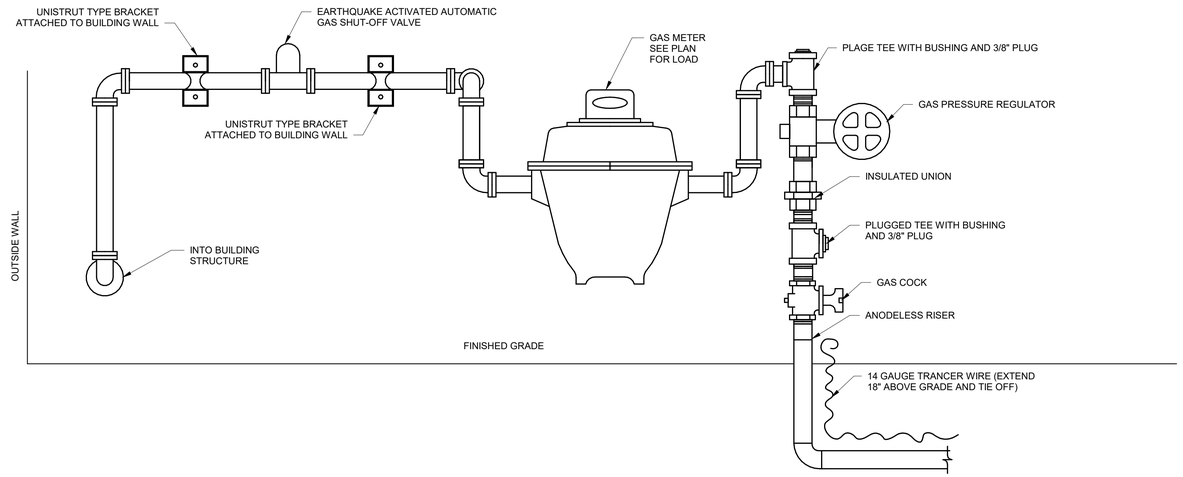

ADD ALTERNATE: TYPICAL LP GAS SERVICE CONNECTION DETAIL

NOT TO SCALE

COMMONWEALTH OF VIRGINIA
PHILLIP L. GENTRY
Lic. No. 025757
01/03/2024
PROFESSIONAL ENGINEER

PLEASE READ BEFORE OPENING ELECTRONIC FILES: NORM SMITH

DRAWINGS AND DESIGN © 2023 NORMAN SMITH ARCHITECTURE.
DRAWINGS AND SPECIFICATIONS AND THE IDEAS, DESIGNS AND ARRANGEMENTS REPRESENTED THEREIN ARE THE EXCLUSIVE PROPERTY OF THE ARCHITECT AND REMAIN, WITHOUT EXCEPTION, THE PROPERTY OF THE ARCHITECT AND MAY NOT BE USED FOR ANY PURPOSE NOT SPECIFICALLY AGREED TO IN WRITING BY THE ARCHITECT. DRAWINGS AND SPECIFICATIONS MODIFIED BY THE OWNER OR CONTRACTOR BEYOND SCALE OR GENERALLY MODIFIED BY THE ARCHITECT UNDER PROVISIONS OF THE AIA DOCUMENTS, WILL BE CLEARLY MARKED AS SUCH OR THEY ARE NULL AND VOID.

THE ARCHITECT'S DRAWINGS AND SPECIFICATIONS ARE INSTRUMENTS OF SERVICE THROUGH WHICH, THE ARCHITECT'S PROFESSIONAL SERVICES TO BE RENDERED ARE DESCRIBED. THEY ARE NOT CONSTRUCTION DOCUMENTS UNLESS OTHERWISE SPECIFICALLY DESIGNATED. THE ARCHITECT'S DRAWINGS AND SPECIFICATIONS ARE THE PROPERTY OF THE ARCHITECT REGARDLESS OF THE STATUS OF THE PROJECT. THE ARCHITECT'S DRAWINGS AND SPECIFICATIONS MAY BE REVOKED OR WITHDRAWN AT THE ARCHITECT'S DISCRETION.

IF THESE FILES ARE USED FOR BIDDING OR PERMIT PRIOR TO THE ARCHITECT'S REVIEW AND APPROVAL, THE FILES WILL BE OFFICIAL AND GENERATED AS-IS, WITHOUT ANY REVISIONS REQUIRED BY THE ARCHITECT. THE ARCHITECT'S REVIEW AND APPROVAL OF THE DOCUMENTS MAY REQUIRE MODIFICATIONS TO THE DOCUMENTS TO ADDRESS CODE, SAFETY, OR OTHER ISSUES. THE ARCHITECT DISCLAIMS ANY RESPONSIBILITY FOR CONSTRUCTION PERFORMED PRIOR TO THE ARCHITECT'S REVIEW AND APPROVAL OF THE DOCUMENTS.

VERIFY ALL ELECTRICAL, MECHANICAL, STRUCTURAL, PLUMBING, FIRE PROTECTION AND OTHER DRAWINGS AND SPECIFICATIONS, AND SITE CONDITIONS PRIOR TO CONSTRUCTION. IN THE EVENT OF ANY DISCREPANCY, THE ARCHITECT SHALL BE NOTIFIED IMMEDIATELY. OWNER'S PROJECT MANAGER OF ANY VARIANCE BETWEEN FACTUAL AND DRAWN CONDITIONS.

No.	Date	Issue Notes	Zone	Appr
2	01/3/2024	release for bid		
1	12/7/2023	permit subm		

Date
Revision
Designed By
Drawn By
Checked By
Reviewed By
Submitted By
Project Manager
Project 23703.culpeper
Drawing Code
CAD File Name
Plot Date

Design Firm
NORMAN SMITH ARCHITECTURE
1341 H Street, Washington, DC 20002-4906
3637 Slate Mills Road, Sperryville, VA 22740
T 202.462.5888 www.normansmitharchitecture.com

Consultant
VALLEY ENGINEERING
4991 Crowe Drive, Mount Crawford, VA 22841
T 540.434.6385 www.valleyesp.com

Project Title
Culpeper County
Community Pool Project
16388 Competition Drive
Culpeper, VA

Sheet Title
PLUMBING DETAILS

Scale
NTS

Sheet No.
P500.5
of

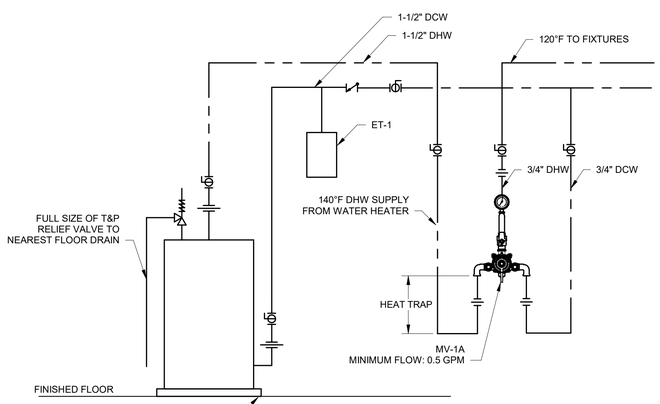

DHW-1 DETAIL

NOT TO SCALE

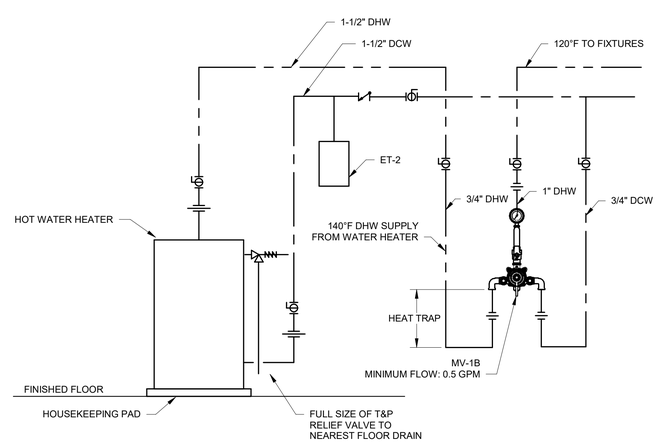

DHW-2 DETAIL

NOT TO SCALE

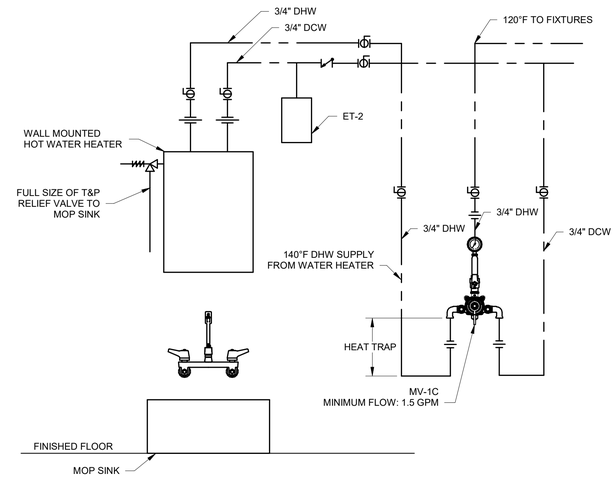

DHW-3 DETAIL

NOT TO SCALE

COMMONWEALTH OF VIRGINIA
PHILLIP L. GENTRY
Lic. No. 025757
01/03/2024
PROFESSIONAL ENGINEER

PLEASE READ BEFORE OPENING ELECTRONIC FILES: NORM PROVIDED:

DRAWINGS AND DESIGN IS NORMAN SMITH ARCHITECTURE. DRAWINGS AND SPECIFICATIONS AND THE IDEAS DESIGNS AND ARRANGEMENTS REPRESENTED THEREIN ARE THE EXCLUSIVE PROPERTY OF THE ARCHITECT AND REMAIN, WITHOUT EXCEPTION, THE PROPERTY OF THE ARCHITECT AND ARE TO BE RETURNED TO THE ARCHITECT UPON REQUEST. THEY WERE PREPARED FOR THE PROJECT AND CONTRACT BETWEEN PLAINTIFF AND OWNER. THEY ARE NOT TO BE REPRODUCED, CHANGED OR COPIED IN ANY FORM OR MANNER WHATSOEVER, NOR ARE THEY TO BE ASSIGNED TO ANY THIRD PARTY WITHOUT FIRST OBTAINING THE WRITTEN CONSENT OF THE ARCHITECT. VERIFY THAT THE LATEST VERSION OF THE DRAWINGS IS THE VERSION BEING USED. THE ARCHITECT IS NOT RESPONSIBLE FOR ANY ERRORS, OMISSIONS, ADDENDA, RFIS, CHANGE ORDERS AND OTHER INFORMATION THAT WAS ADDED OR MODIFIED AFTER THE LAST VERSION WAS ISSUED. VERIFY ALL ELEVATIONS AND FIELD CONDITIONS PRIOR TO CONTINUING WITH WORK. REPORT ANY ERRORS, OMISSIONS OR INCONSISTENCIES IMMEDIATELY TO OWNER'S PROJECT MANAGER OR ARCHITECT. ARCHITECT IS NOT RESPONSIBLE FOR ANY VARIANCE BETWEEN FACTUAL AND DRAWING DATA.

IF RIBBED FILES ARE USED TO VIEW PLANS OR OTHER PRINTED PRESENTATIONS, THE FILES ARE OFFICIAL AND GOVERNMENT AND/OR CONTRACTOR PRINTS MUST BE MADE FROM THESE FILES. THE ARCHITECT IS NOT RESPONSIBLE FOR ANY DIFFERENCES BETWEEN THE RIBBED FILES AND THE PRINTED DOCUMENTS

TREE PLANT SCHEDULE

SYM.	QTY.	COMMON NAME (Botanical Name)	SIZE AT PLANTING	REMARKS
CBF	7	UPRIGHT EUROPEAN HORNBEAM *(Carpinus betula 'Fastigiata')*	2" CALIPER 8' MIN	B AND B, SINGLE STEM STRAIGHT
LIN	6	NATCHEZ CREPE MYRTLE *(Lagerstroemia indica 'Natchez')*	8' MIN	B AND B, MULTI-STEM SPECIMEN
CQJM	1	CRIMSON QUEEN JAPANESE MAPLE *(Acer palmatum var. dissectum 'Crimson Queen')*	2" CALIPER	B AND B, SINGLE STEM STRAIGHT

SHRUBS PLANT SCHEDULE

SYM.	QTY.	COMMON NAME (Botanical Name)	SIZE AT PLANTING	REMARKS
AEG	29	EDWARDS GOUCHER ABELIA *(Abelia x 'Edward Goucher')*	24" - 30"	-
IMBP	17	BLUE PRINCESS HOLLY *(Ilex x meserveae 'Blue Princess')*	36"	-
NDHD	38	HARBOR DWARF NANDINA *(Nandina domestica 'Harbor Dwarf')*	18" - 24"	-
EKM	36	MANHATTEN EUONYMUS *(Euonymus kiautschovicus 'Manhattan')*	30" - 36"	-

ORNAMENTAL GRASSES / PERENNIALS PLANT SCHEDULE

SYM.	QTY.	COMMON NAME (Botanical Name)	SIZE AT PLANTING	REMARKS
HSDO	390	STELLA DE ORO DWARF DAYLILLY *(Hemerocallis x 'Stella de Ora')*	4" POTS	PLANT 18" O.C.

GROUNDCOVERS PLANT SCHEDULE

SYM.	QTY.	COMMON NAME (Botanical Name)	SIZE AT PLANTING	REMARKS
LS	730	CREEPING LILYTURF (Liriope Spicata)	2-1/4" POTS	PLANT 12" O.C.

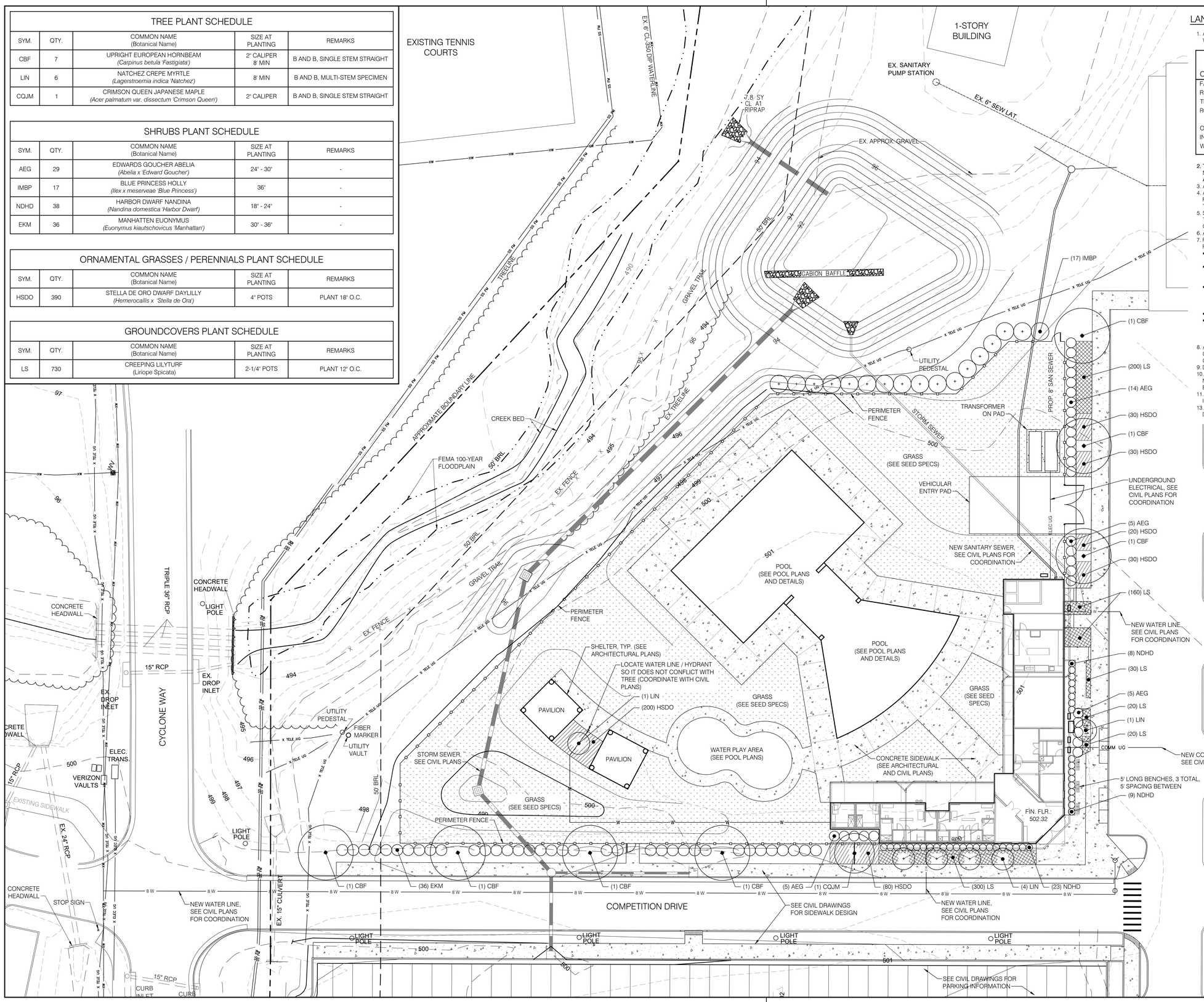

LANDSCAPE NOTES:

1. ALL AREAS OF THE SITE SHALL BE SEEDED OR MULCHED. SEEDING IS SHOWN IN AREAS WHERE ALL OTHER LANDSCAPE PLANTINGS ARE NOT SCHEDULED. SEED TYPE SHALL BE:

PERMANENT SEEDING

CONTAINS	PURE SEED	GERM
FALCON IV TALL FESCUE	30.00% (± 1%)	MINIMUM 90.00%
RENEGADE DT TALL FESCUE	30.00% (± 1%)	MINIMUM 90.00%
TRIBUTE II FESCUE	30.00% (± 1%)	MINIMUM 90.00%
ROCKSTAR KENTUCKY BLUEGRASS	10.00% (± 1%)	MINIMUM 85.00%
OTHER CROP SEEDS	LESS THAN 0.10%	
INERT MATTER	LESS THAN 0.50%	
WEED SEEDS	0.00%	

2. **THE GENERAL CONTRACTOR SHALL COORDINATE SEEDING WITH THE CONSTRUCTION SCHEDULE AND PLANNED POOL OPENING SO THAT THE SEEDING IS INSTALLED IN ADEQUATE TIME TO BE ESTABLISHED PRIOR TO PLANNED POOL OPENING.**
3. ALL SOILS IN TURF AREAS WILL RECEIVE 8" OF SCREENED TOPSOIL.
4. ALL LANDSCAPE PLANTING AREAS WILL RECEIVE 12" OF TOPSOIL CONTAINING LESS THAN 5% ROCK (LESS THAN 2" DIA.) THAT IS NOT COMPACTED WITH HEAVY EQUIPMENT TIRES OR TRACKS, LIFTS, OR ANY OTHER EQUIPMENT CAUSING SOIL COMPACTION.
5. SOILS IN LANDSCAPE PLANTING AREAS WILL RECEIVE 4" OF ORGANIC COMPOST TILLED IN ON TOP OF THE 12" OF TOPSOIL. COMPOST WILL BE UNIFORMLY SPREAD AND INCORPORATED OVER ENTIRE PLANTING AREAS.
6. ALL LANDSCAPE PLANTING AREAS WILL RECEIVE 3" OF BARK MULCH.
7. FURNISH NURSERY GROWN TREES AND SHRUBS COMPLYING WITH ANSI AND THE FOLLOWING REQUIREMENTS AND SHALL BE ACCEPTED BY THE LANDSCAPE ARCHITECT OR OWNER:
   - PROVIDE PLANTS WITH HEALTHY ROOT SYSTEMS DEVELOPED BY TRANSPLANTING OR ROOT PRUNING
   - PROVIDE WELL SHAPED, FULLY BRANCHED, HEALTHY, VIGOROUS STOCK FREE OF DISEASE, INSECTS, EGGS, LARVAE, AND DEFECTS SUCH AS DISFIGURING KNOTS, SUN SCALD, INJURIES, ABRASIONS, AND DISFIGUREMENT .
   - PROVIDE SELECTED SPECIMEN QUALITY PLANTS BEING EXCEPTIONALLY HEAVY, SYMMETRICAL, TIGHT KNIT, SO TRAINED OR FAVORED IN THEIR DEVELOPMENT AND APPEARANCE AS TO BE SUPERIOR IN FORM, NUMBER OF BRANCHES, COMPACTNESS AND SYMMETRY.
   - DO NOT PRUNE PLANTS BEFORE DELIVERY.
   - PROVIDE PLANTS TYPICAL OF THEIR SPECIES OR VARIETY AND EXHIBITING A NORMAL HABIT OF GROWTH AND BE LEGIBLY TAGGED WITH PROPER NAME. PROVIDE PLANTS GROWN UNDER CLIMATIC CONDITIONS SIMILAR TO THOSE OF SITE OR HAVE BEEN ACCLIMATED TO SUCH CONDITION FOR AT LEAST 2 YEARS.
8. ALL LANDSCAPED AREA SHALL BE MAINTAINED IN GOOD CONDITION BY LANDSCAPE CONTRACTOR FOR DURING CONSTRUCTION AND FOR 1 YEAR AFTER SUBSTANTIAL COMPLETION OF THE ENTIRE PROJECT.
9. DEAD OR DYING VEGETATION SHALL BE REPLACED AT THE DIRECTION OF THE OWNER.
10. REPLACEMENT SHRUBS SHALL BE OF A SIZE CONSISTENT WITH THAT WHICH COULD NORMALLY BE EXPECTED BASED UPON THE SPECIFIC SPECIES AND THE LENGTH OF THE TIME ELAPSED SINCE INITIAL INSTALLATION OF LANDSCAPING.
11. REPLACEMENT TREES SHALL BE ½" CALIPER LARGER FOR EACH YEAR SINCE INITIAL INSTALLATION OF TREE, UP TO 5" CALIPER.
13. TREE PLANTINGS SHALL NOT INTERFERE WITH UTILITIES, ROADWAYS, SIDEWALKS, SIGHT DISTANCE OR STREETLIGHTS.

PLANS AND SPECIFICATIONS, ELECTRONIC DATA, FORMS AND PROCEDURES

THE CONTENTS OF ALL DRAWINGS, SPECIFICATIONS, ELECTRONIC DATA, FORMS AND PROCEDURES ARE THE PROPERTY OF NORMAN SMITH ARCHITECTURE. THEY ARE FURNISHED INTERIM OR FINAL FOR THE USE OF THE OWNER OF RECORD FOR THE PROJECT SHOWN. ANY OTHER USE OR REPRODUCTION WITHOUT WRITTEN CONSENT OF THE ARCHITECT IS PROHIBITED. THE ARCHITECT RETAINS ALL COMMON LAW, STATUTORY AND OTHER RIGHTS, INCLUDING COPYRIGHT.

IF THESE FILES ARE USED TO MAKE OR PROVIDE PREPARATION, THE FILE IS TRUE AS OF THE DATE PRINTED OR SAVED. THE ARCHITECT DOES NOT REPRESENT THAT THE FILE IS TRUE AFTER THE DATE PRINTED OR SAVED. THE ARCHITECT DOES NOT REPRESENT THAT THE FILE IS TRUE ON ANY OTHER SYSTEM THAN THE ARCHITECT'S. THE ARCHITECT MAY, BUT HAS NO OBLIGATION TO, REMOVE OBSOLETE INFORMATION FROM THE FILE. THE FILE MAY BE OUTDATED AND INCOMPLETE OR INCORRECT. THE ARCHITECT MAKES NO REPRESENTATIONS AS TO THE COMPATIBILITY OF THE FILE WITH ANY HARDWARE OR SOFTWARE. THE ARCHITECT MAKES NO REPRESENTATIONS AS TO THE ACCURACY OF THE FILE WHEN IT IS PRINTED, STORED, TRANSMITTED OR RECEIVED. THE ARCHITECT DISCLAIMS ALL WARRANTIES, EXPRESS OR IMPLIED, INCLUDING, BUT NOT LIMITED TO, THE IMPLIED WARRANTIES OF MERCHANTABILITY AND FITNESS FOR A PARTICULAR PURPOSE.

BECAUSE OF THE FILES' FORMATS AND, IN SOME CASES, BECAUSE THE ARCHITECT'S COPYRIGHT RESTRICTS THE ARCHITECT'S ABILITY TO MAKE THE FILES' CONTENTS AVAILABLE, THE ARCHITECT'S ABILITY TO MAKE THE FILES AVAILABLE IS LIMITED. THE ARCHITECT MAY, BUT HAS NO OBLIGATION TO, MAKE THE FILES AVAILABLE TO THE OWNER OF RECORD FOR THE PROJECT SHOWN ON THE FILES, OR TO OTHER PERSONS OR ENTITIES WHO HAVE ENTERED INTO AN AGREEMENT WITH THE ARCHITECT REGARDING THE USE OF THE FILES. ANY USE OR RELIANCE BY OTHERS ON THE FILES IS AT THEIR SOLE RISK.

VERIFY ALL BUILDING AND SITE CONDITIONS PRIOR TO CONSTRUCTION. NOTIFY ARCHITECT IMMEDIATELY OF ANY VARIANCE BETWEEN ACTUAL AND DRAWN DIMENSIONS.

DO NOT SCALE DRAWINGS. USE ONLY DIMENSIONS WRITTEN ON DRAWINGS.

REPORT ANY ERRORS, OMISSIONS OR INCONSISTENCIES IN THE DRAWINGS AND SPECIFICATIONS AND THE REQUIREMENTS OF CODES, ORDINANCES, AND LAWS TO THE ARCHITECT PROMPTLY AND PRIOR TO ACTION THEREON.

VERIFY PLAN TYPE AND DIMENSIONS OF ALL SPECIFICATIONS, DRAWINGS, SCHEDULES, SPECIFICATIONS, AGENDA, BITS, CHANGE ORDERS AND OTHER DOCUMENTS AND DATA PRIOR TO COMMENCING WORK OR ORDERING MATERIALS.

VERIFY ALL BUILDING AND SITE CONDITIONS PRIOR TO CONSTRUCTION. NOTIFY ARCHITECT IMMEDIATELY OF ANY VARIANCE BETWEEN ACTUAL AND DRAWN DIMENSIONS.

No.	Date	Issue Notes	Revision Notes	Zone	Appr
2	1/3/2024	release for bid			
1	12/20/23	permit review			

Drawn By	
Date	12/7/23
Reason	
Project #	21703-culpeper
Drawing Code	
CAD File Name	
Plot Date	

Design Firm
NORMAN SMITH ARCHITECTURE
1341 H Street, Washington, DC 20002-4906
3637 State Mills Road, Sperryville, VA 22740
T 202.462.5888 www.normansmitharchitecture.com

Consultant
VALLEY ENGINEERING
4901 Crowe Dr., Mt. Crawford, VA 22841
T 540.434.6365 www.valleyesp.com

Project Title
Culpeper County
Community Pool Project
16388 Competition Drive
Culpeper, VA

Sheet Title
LANDSCAPE PLAN

Scale
1" = 20'-0"

Sheet No.
L100.1
of

COMMONWEALTH OF VIRGINIA
CRAIG A GEORGE
Cert. No. 1616
01-03-2024
LANDSCAPE ARCHITECT